# LAGOA

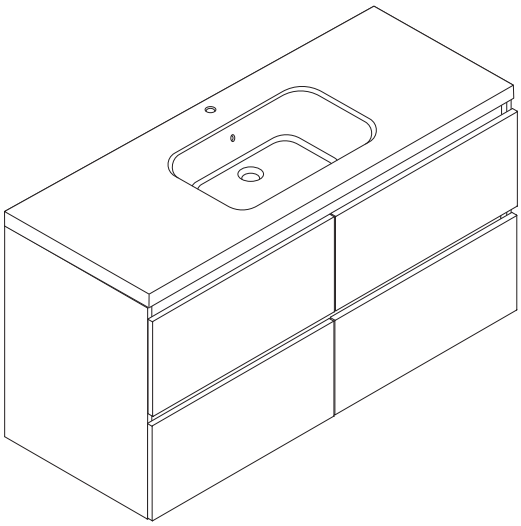

1/24

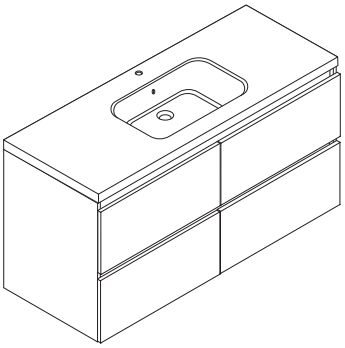

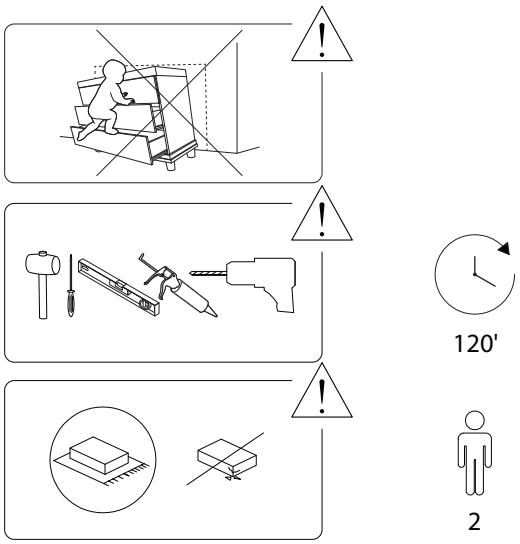


2/24



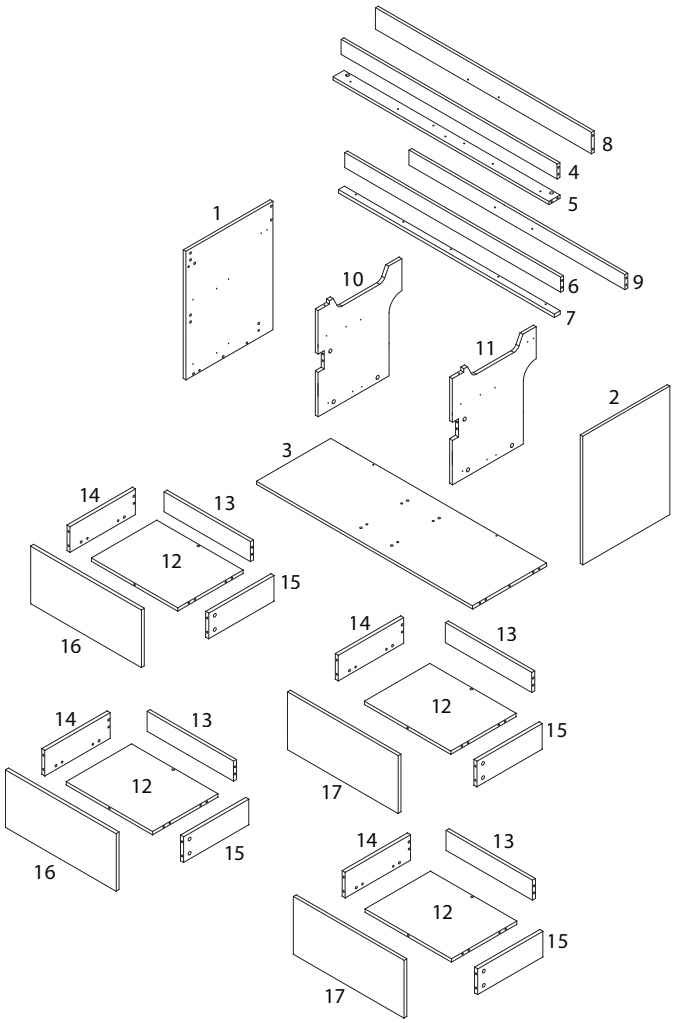


3/24

| | | | |
|---|---|---|---|
| 1 x 1 | 2 x 1 | 3 x 1 | |
| 4 x 1 | 5 x 1 | 6 x 1 | |
| 7 x 1 | 8 x 1 | 9 x 1 | |
| 10 x 1 | 11 x 1 | 12 x 4 | 13 x 4 |
| 14 x 4 | 15 x 4 | 16 x 2 | 17 x 2 |

4/24



77/LAGOA-120/231225/

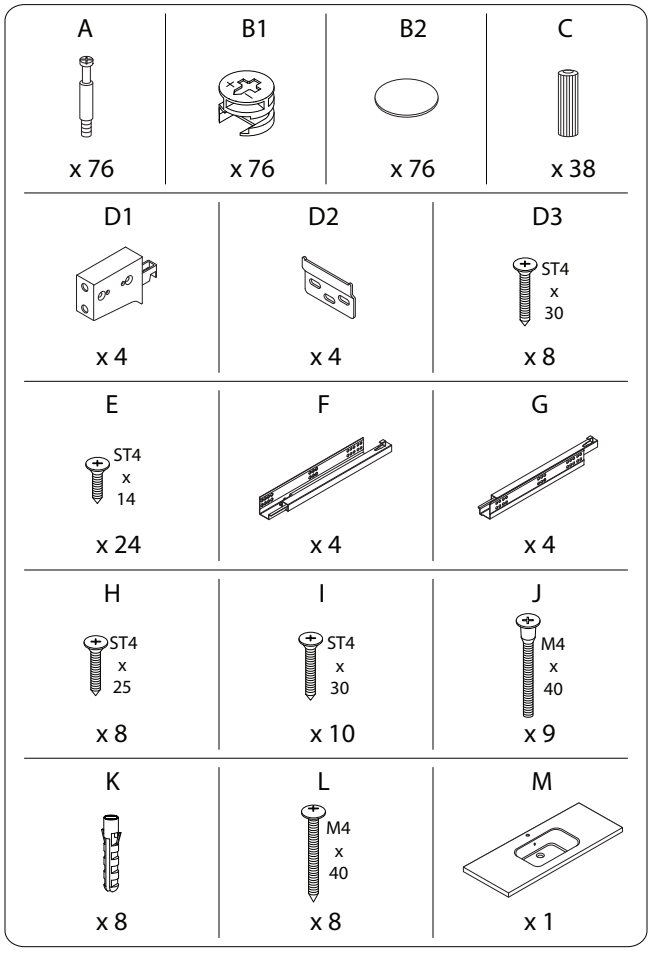
A
x 76
B1
x 76
B2
x 76
C
x 38
D1
x 4
D2
x 4
D3
ST4
x
30
x 8
E
ST4
x
14
x 24
F
x 4
G
x 4
H
ST4
x
25
x 8
I
ST4
x
30
x 10
J
M4
x
40
x 9
K
x 8
L
M4
x
40
x 8
M
x 1





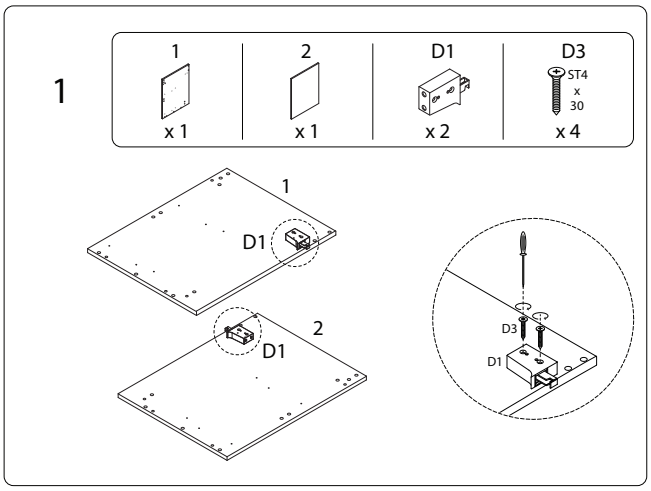
1
1
x 1
2
x 1
D1
x 2
D3
ST4
x
30
x 4
1
D1
2
D1
D3
D1

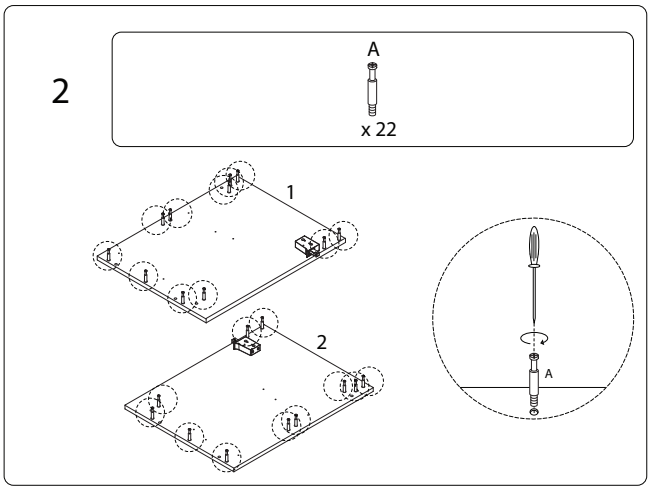
2
A
x 22
1
2
A





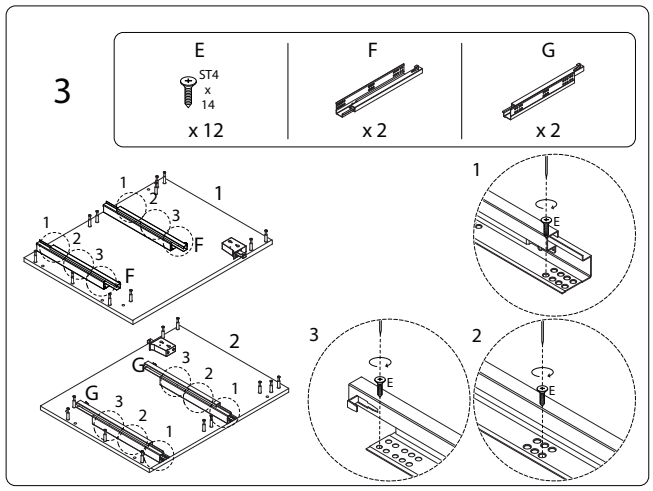
3
E
ST4
x
14
x 12
F
x 2
G
x 2
1
2
3
F
G
E

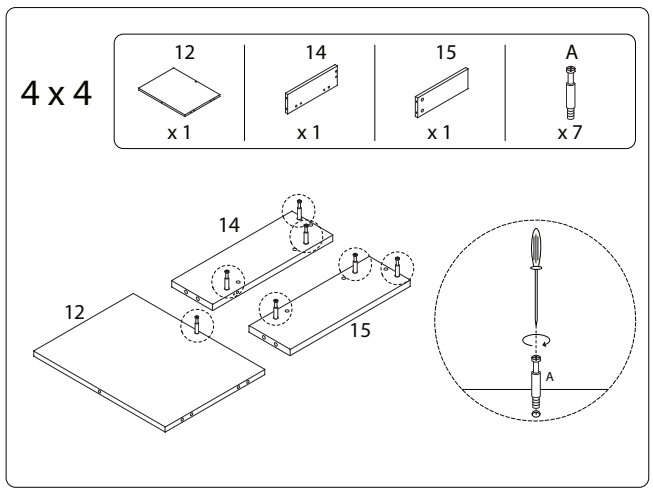
4 x 4
12
x 1
14
x 1
15
x 1
A
x 7
14
12
15
A





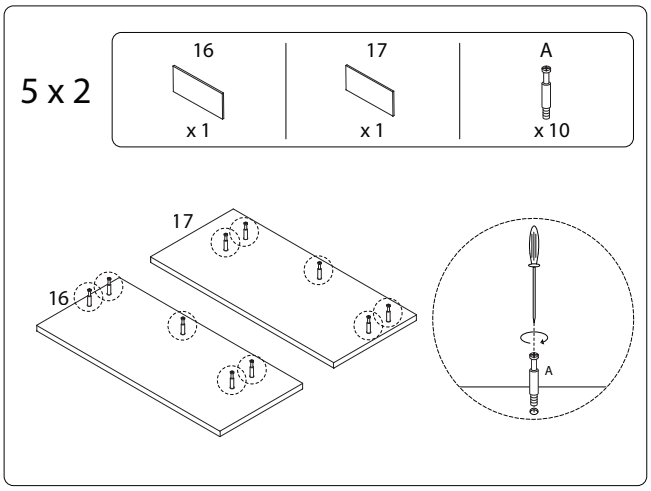
5 x 2
16
x 1
17
x 1
A
x 10
17
16
A

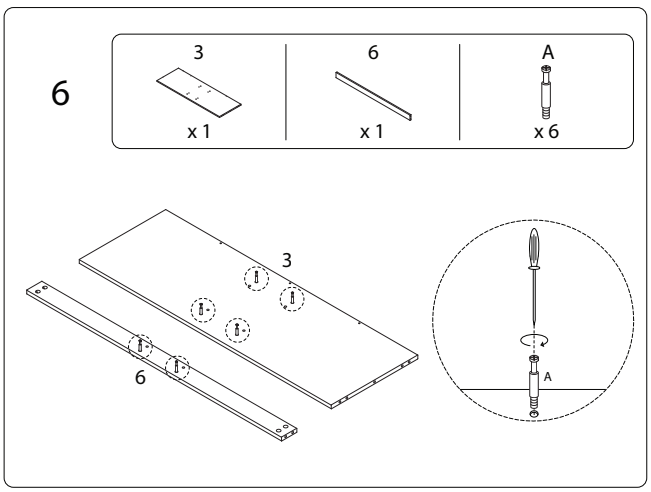
6
3
x 1
6
x 1
A
x 6
3
6
A

7 x 4

13 x 1

C x 6

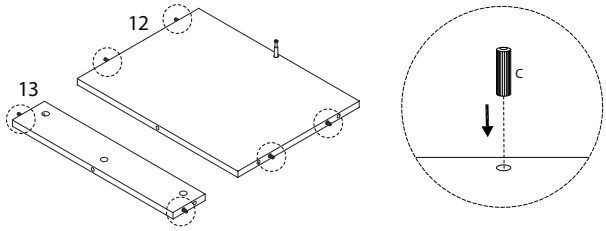


9

4 x 1

7 x 1

I ST4 x 30 x 10

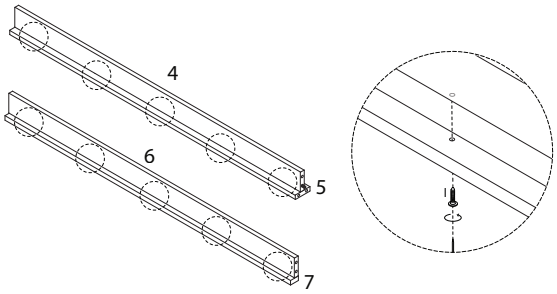


8

5 x 1

9 x 1

10 x 1

11 x 1

C x 14

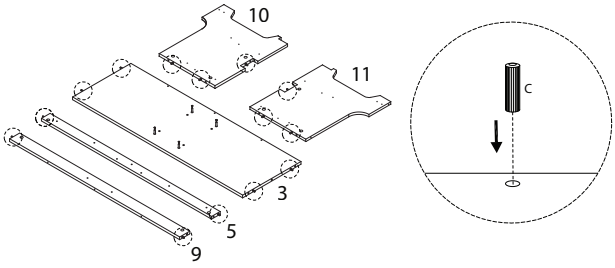


10

B1 x 6

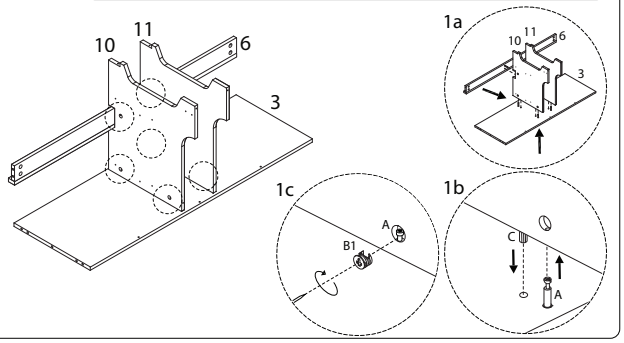










11

B2 x 6

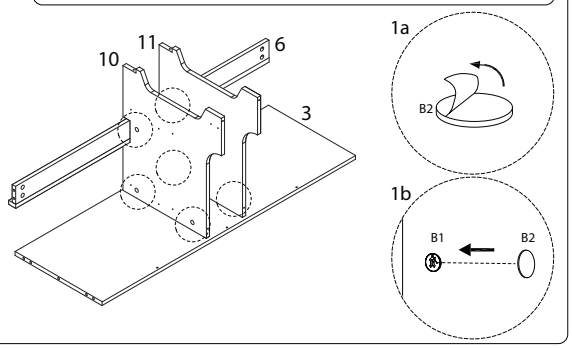


13

B2 x 6

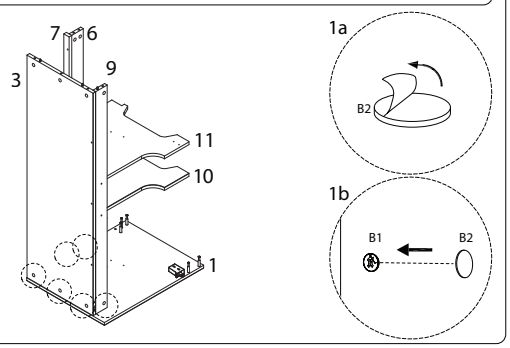


12

B1 x 6

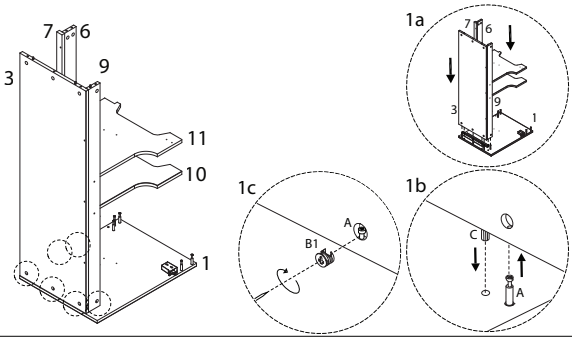


14

8 x 1

B1 x 5

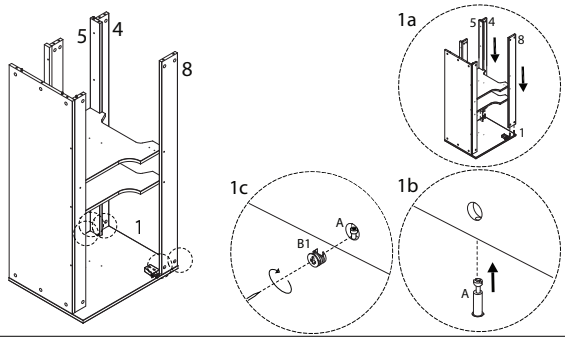

15

B2

x 5

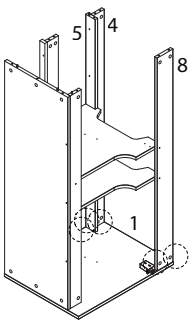


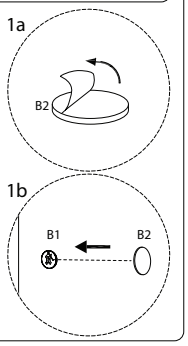


16

B1

x 11

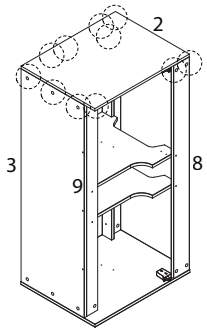


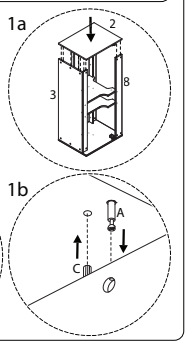






17

B2

x 11

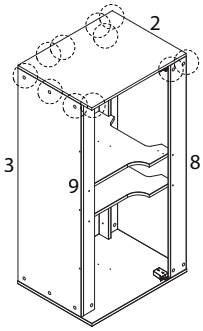


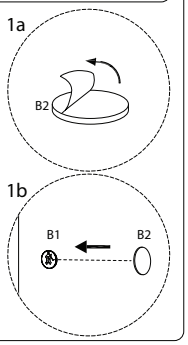


18

J

M4 x 40

x 7

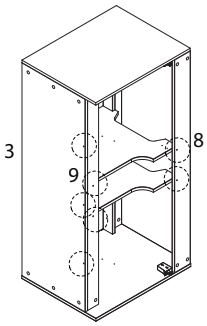


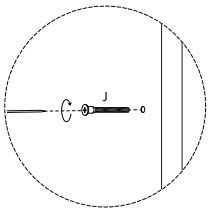






19

J

M4 x 40

x 2

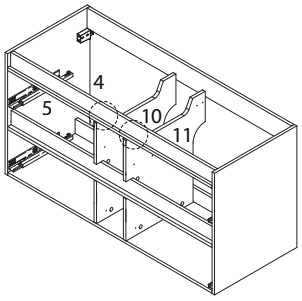


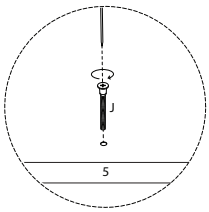


20

D1

x 2

D3

ST4 x 30

x 4

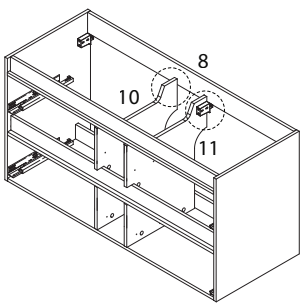


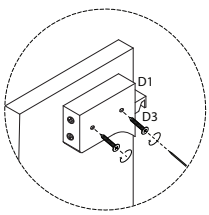




21

E

ST4 x 14

x 12

F

x 2

G

x 2

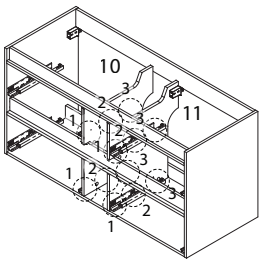


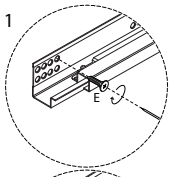


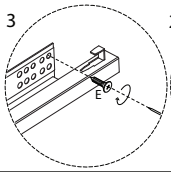


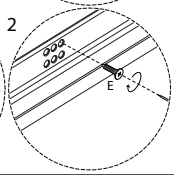


22 x 4

B1

x 1

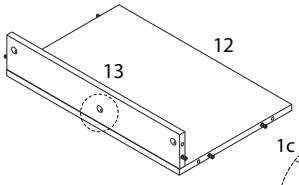


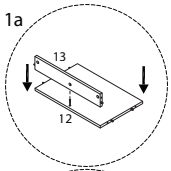


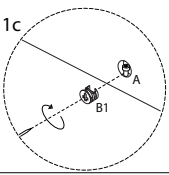


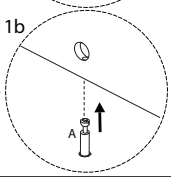

23 x 4

B2

x 1

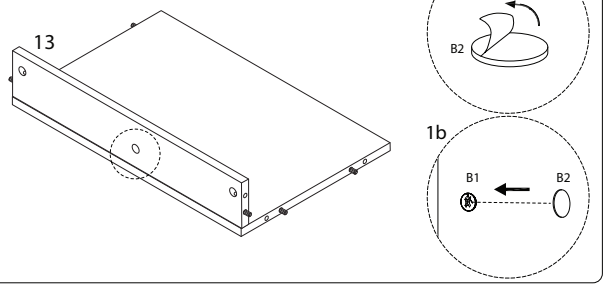





25 x 4

B2

x 6

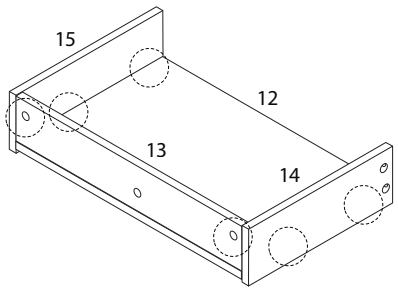


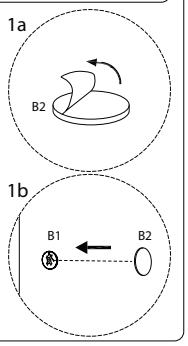


24 x 4

B1

x 6

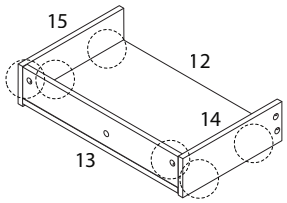


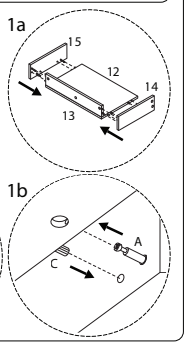


26 x 2

B1

x 5

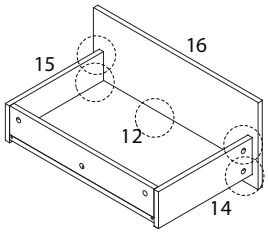


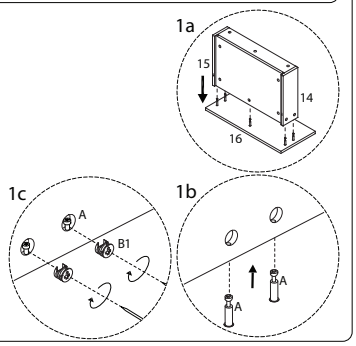










27 x 2

B2

x 5

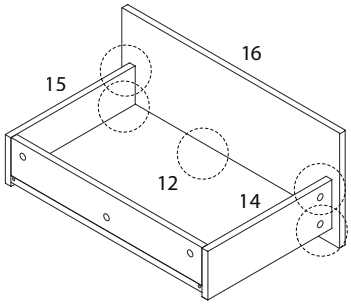


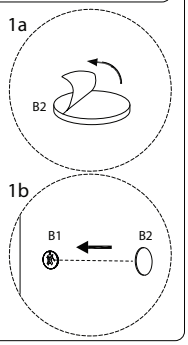


29 x 2

B2

x 5

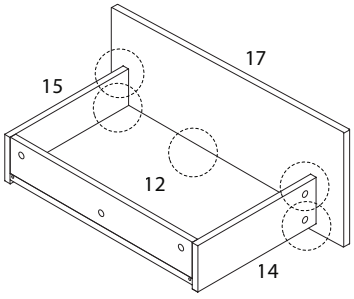


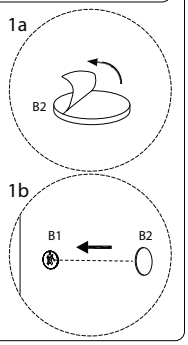


28 x 2

B1

x 5

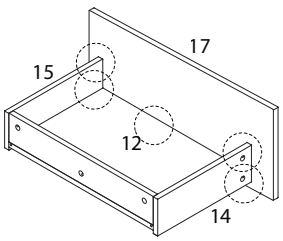


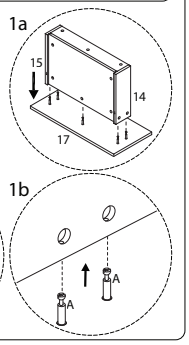


30

K

x 8

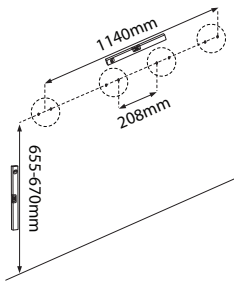


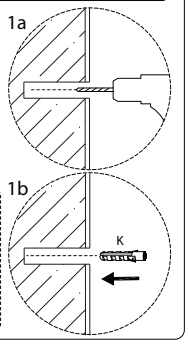

## 31

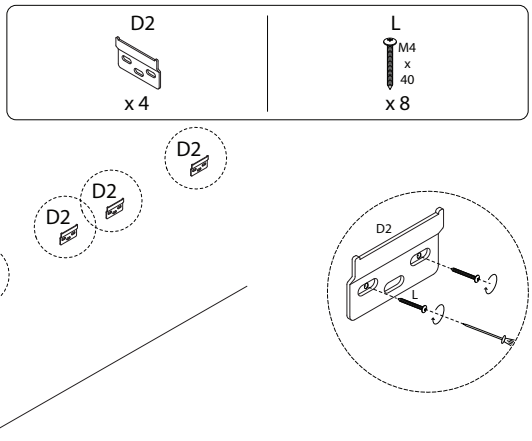


## !

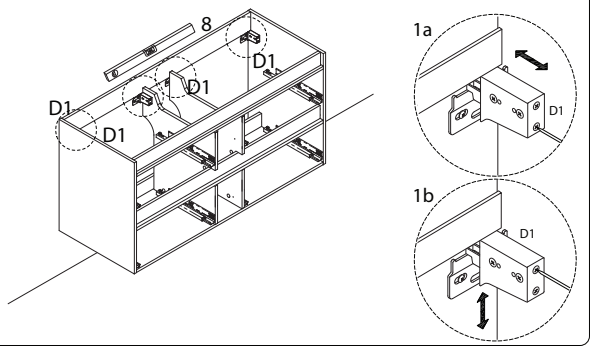


## 32

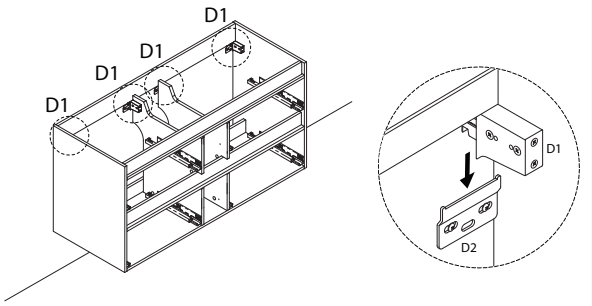


## 33

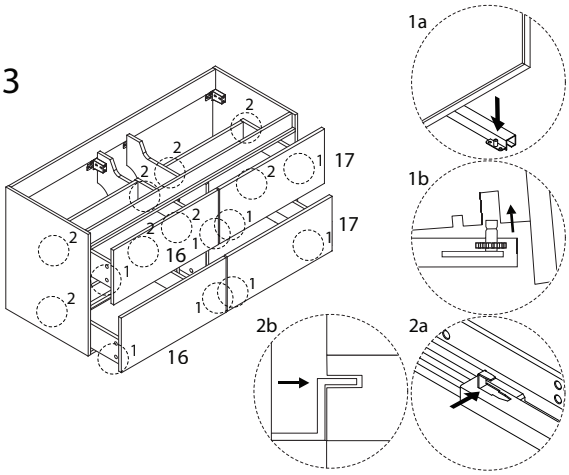










## 34

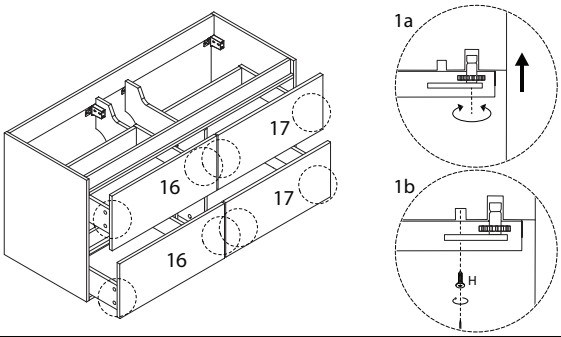


## 36

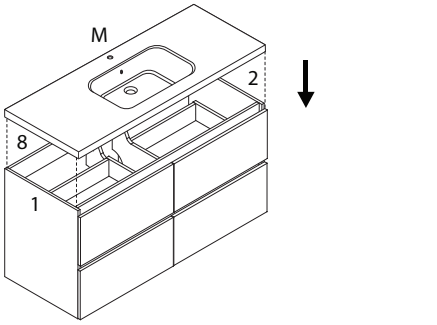


## 35

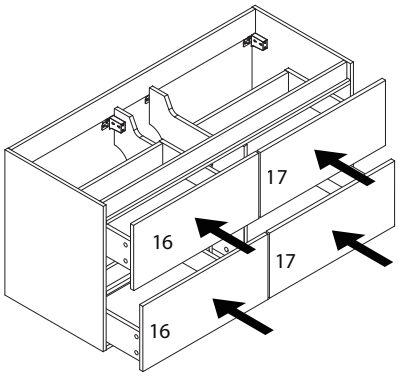


## 37

