DALHOUSIE

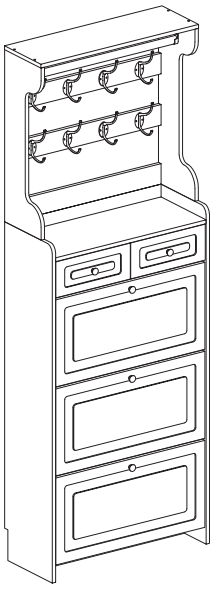

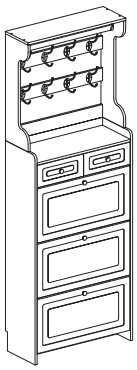

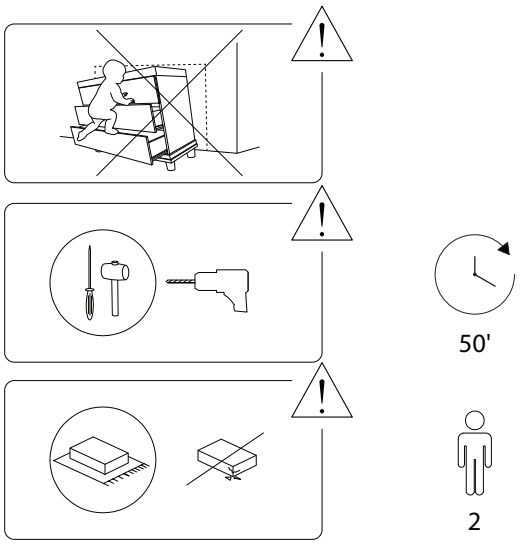
50'
2

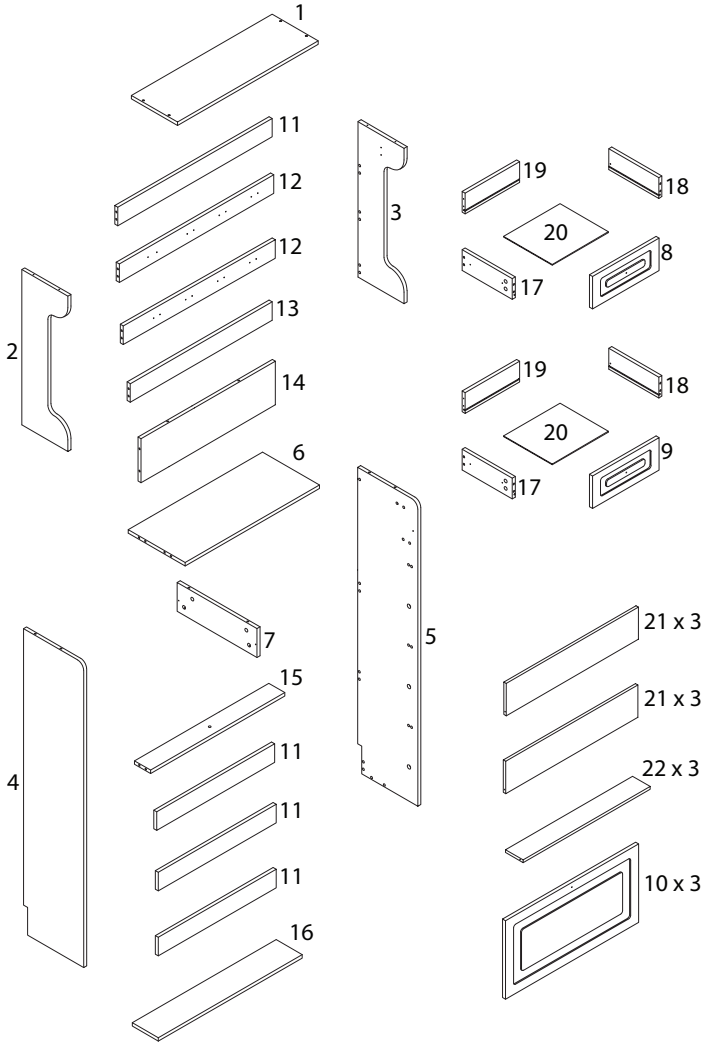
1
11
12
12
13
14
6
7
15
11
11
11
16
2
4
3
5
19
18
20
17
8
19
18
20
17
9
21 x 3
21 x 3
22 x 3
10 x 3

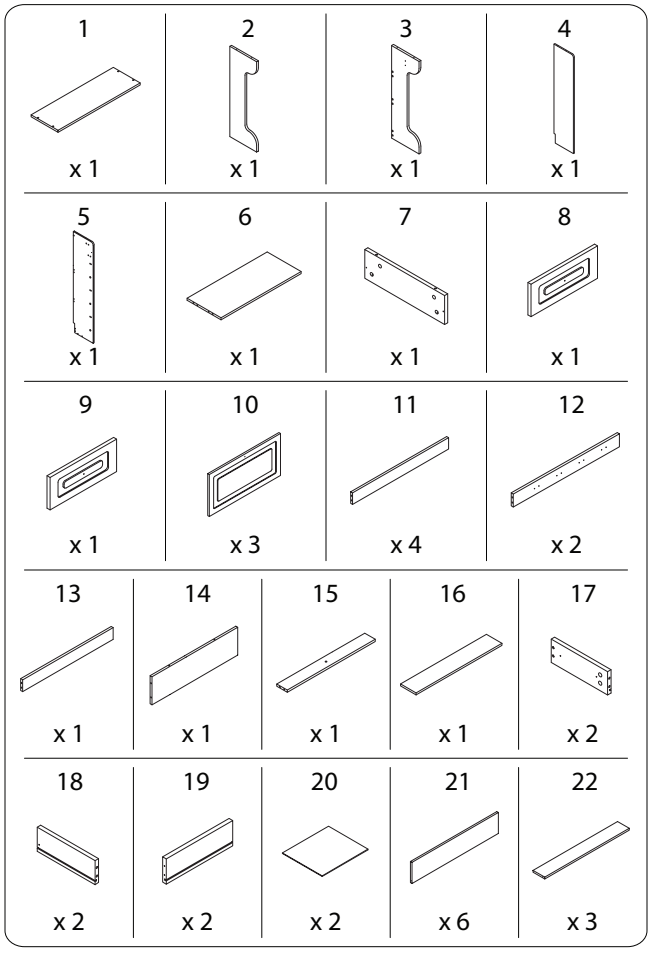
1 x 1
2 x 1
3 x 1
4 x 1
5 x 1
6 x 1
7 x 1
8 x 1
9 x 1
10 x 3
11 x 4
12 x 2
13 x 1
14 x 1
15 x 1
16 x 1
17 x 2
18 x 2
19 x 2
20 x 2
21 x 6
22 x 3

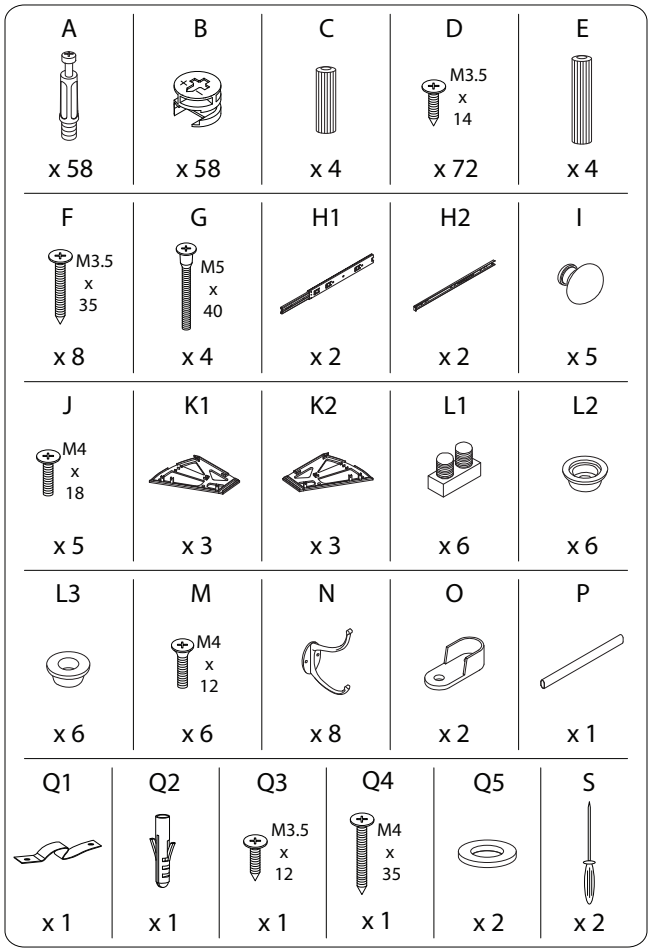
A x 58
B x 58
C x 4
D M3.5 x 14 x 72
E x 4
F M3.5 x 35 x 8
G M5 x 40 x 4
H1 x 2
H2 x 2
I x 5
J M4 x 18 x 5
K1 x 3
K2 x 3
L1 x 6
L2 x 6
L3 x 6
M M4 x 12 x 6
N x 8
O x 2
P x 1
Q1 x 1
Q2 x 1
Q3 M3.5 x 12 x 1
Q4 M4 x 35 x 1
Q5 x 2
S x 2

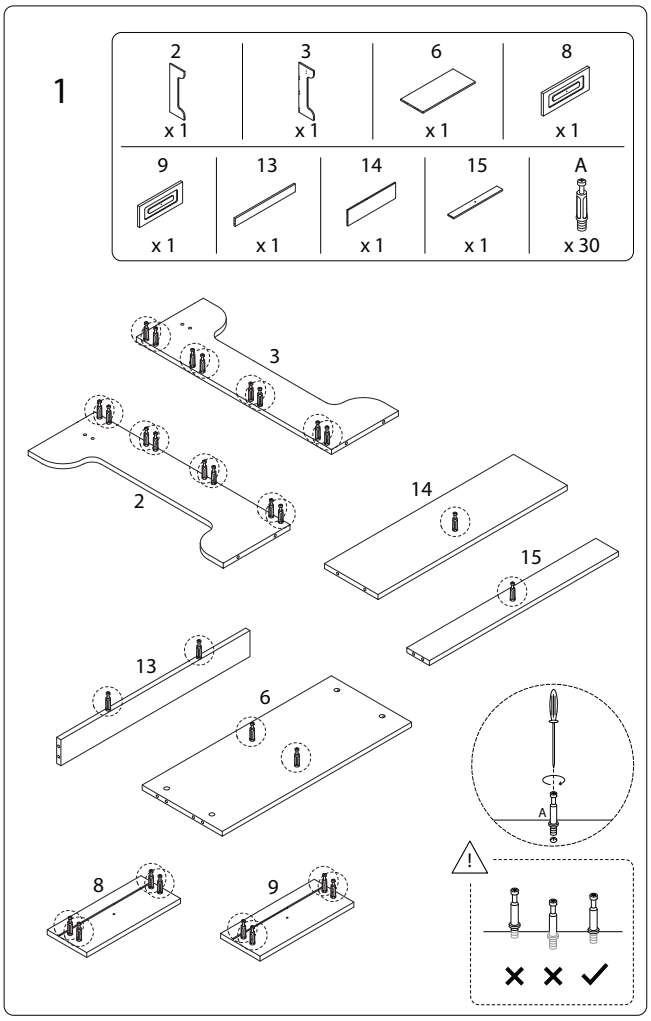
1
2 x 1
3 x 1
6 x 1
8 x 1
9 x 1
13 x 1
14 x 1
15 x 1
A x 30
3
2
14
15
13
6
A
8
9

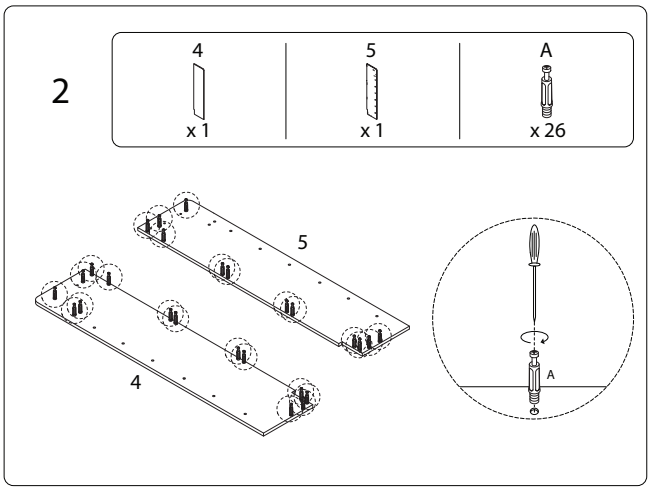
2
4 x 1
5 x 1
A x 26
5
4
A

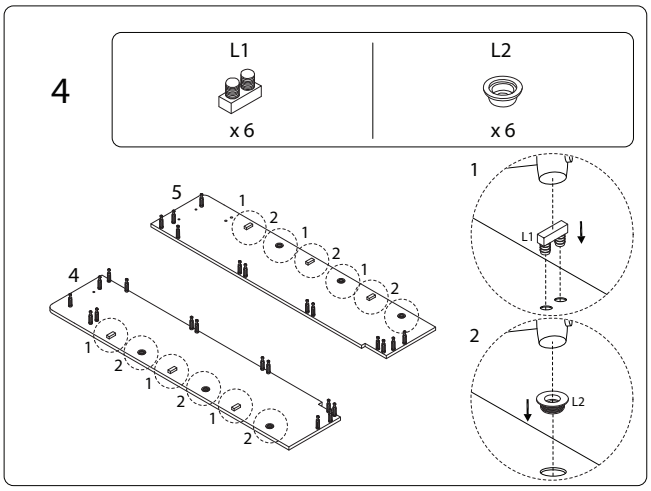
4
L1 x 6
L2 x 6
5
4
1
2
L1
L2

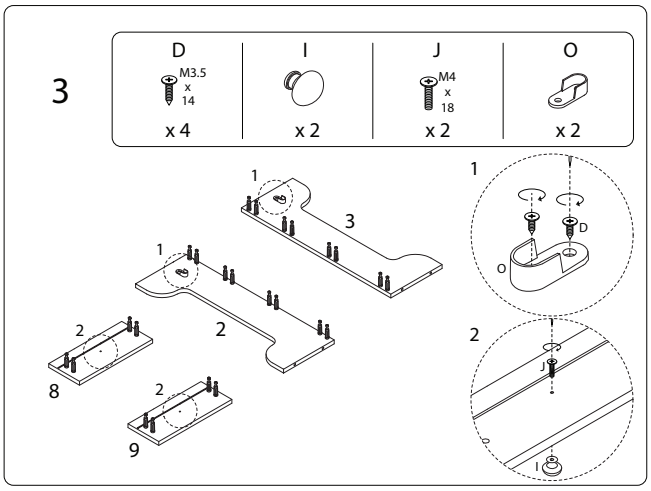
3
D M3.5 x 14 x 4
I x 2
J M4 x 18 x 2
O x 2
1
3
2
8
9
D
O
J
I

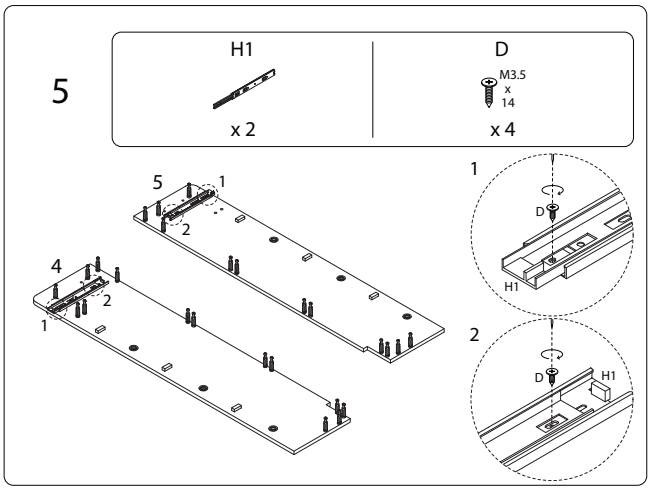
5
H1 x 2
D M3.5 x 14 x 4
5
4
1
2
D
H1

6

11	12	B
x 1	x 2	x 8

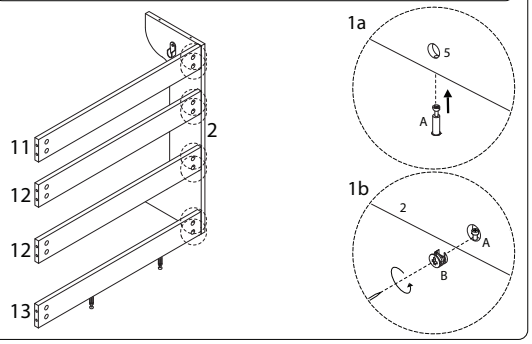

7

B
x 8

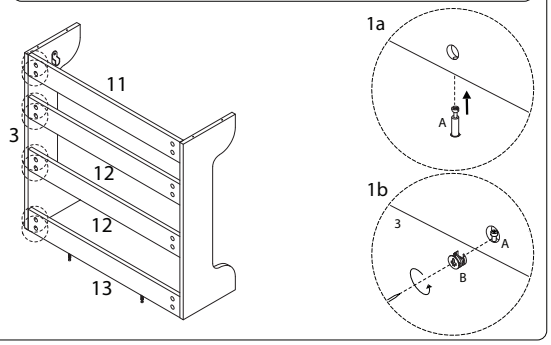

8

1	G
x 1	M5 x 40 x 4

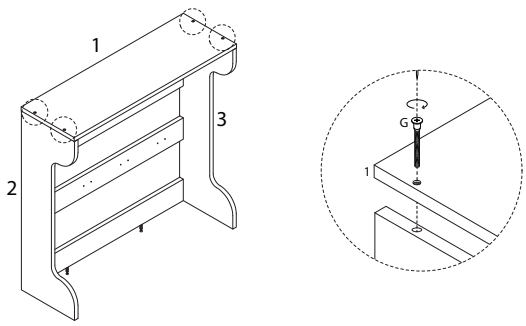

9

D	N
M3.5 x 14 x 16	x 8

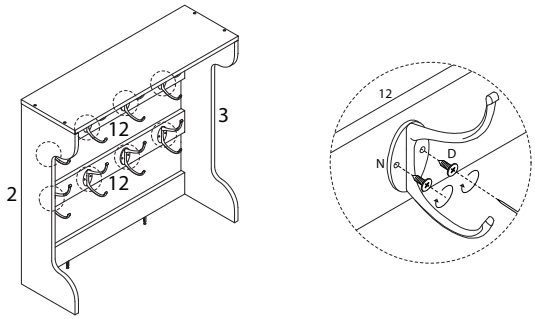

10

7	B
x 1	x 2

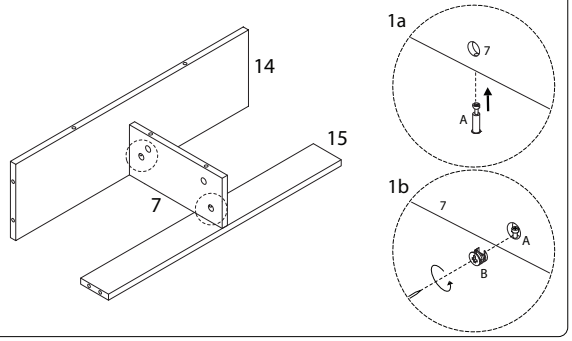

11

H1	D
x 1	M3.5 x 14 x 2

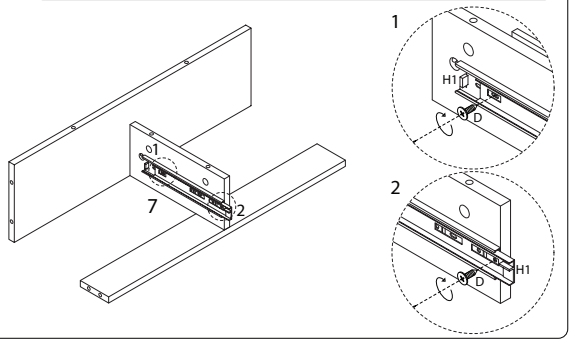

12

H1	D
x 1	M3.5 x 14 x 2

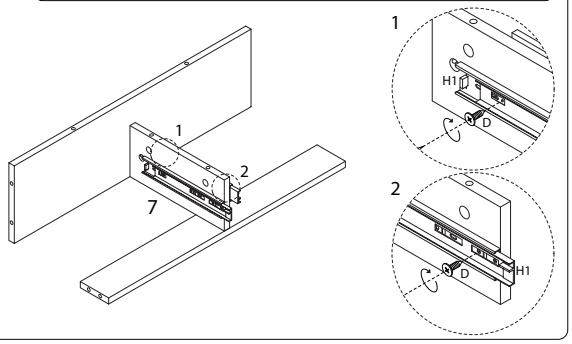

13

B
x 2

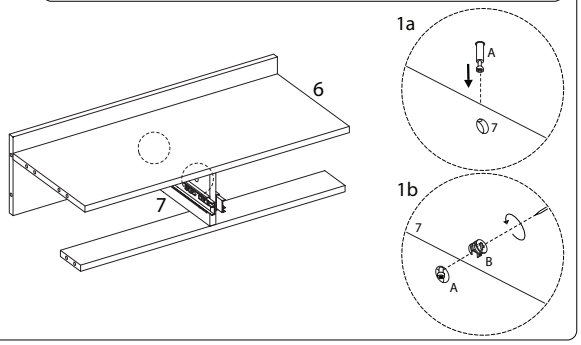

14

C
x 4

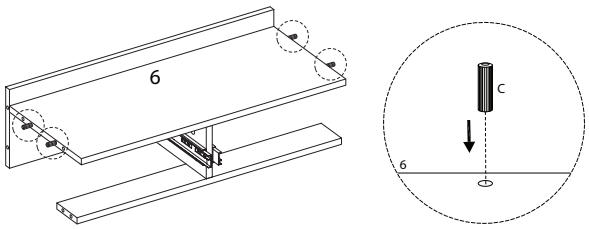

15

B
x 6

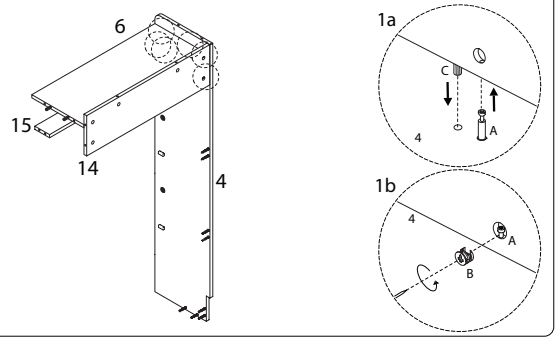

16

11	16	B
x 3	x 1	x 8

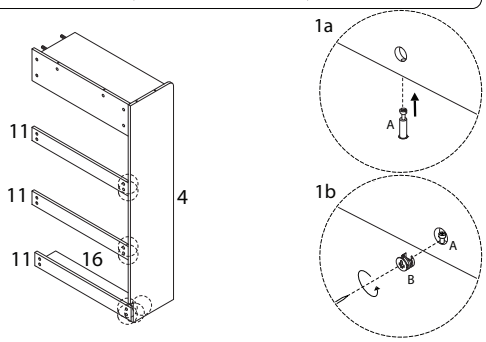

17

B
x 14

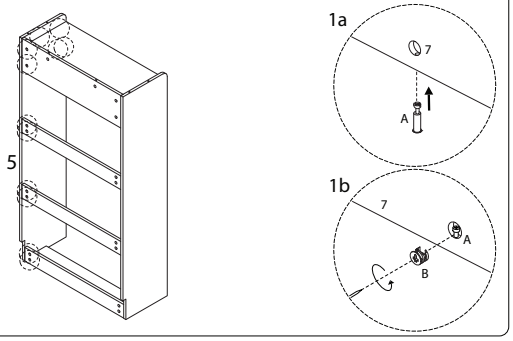

18 x 3

10	22	D	K1	K2
x 1	x 1	M3.5 x 14 x 8	x 1	x 1

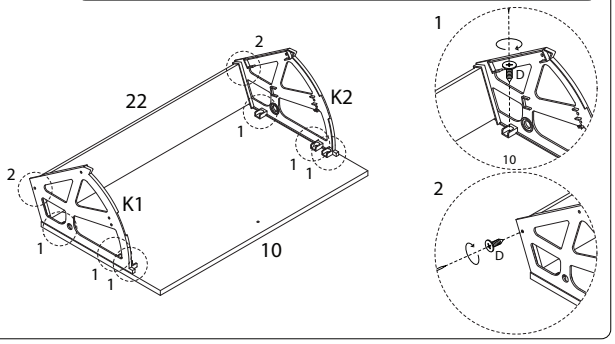

20 x 3

21	D
x 1	M3.5 x 14 x 2

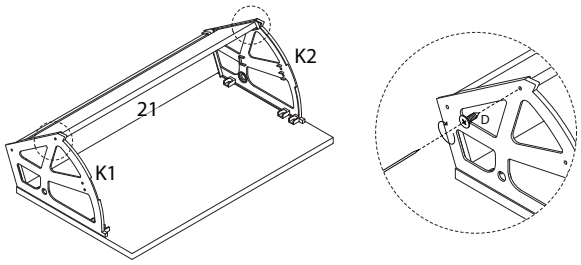

19 x 3

I	J
x 1	M4 x 18 x 1

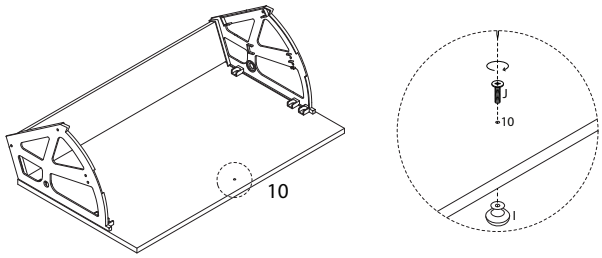

21

L3	M
x 6	M4 x 12 x 6

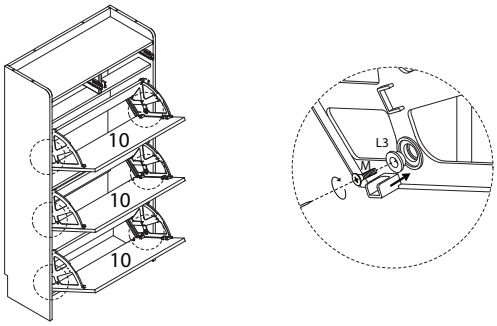

22

21	D
x 3	M3.5 x 14 x 6

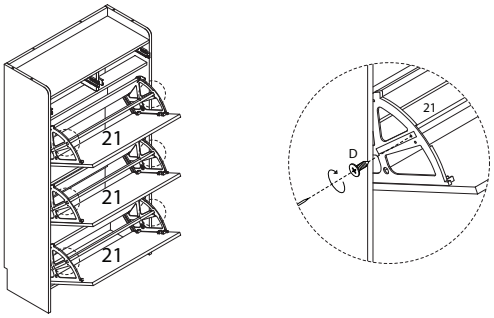

23 x 2

17	18	19	F
x 1	x 1	x 1	M3.5 x 35 x 4

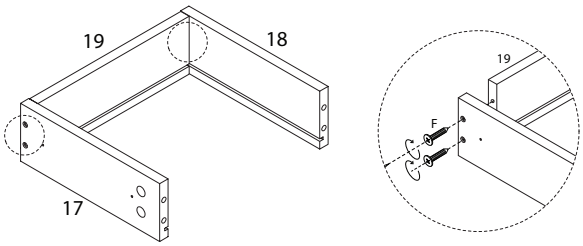

24 x 2

20
x 1

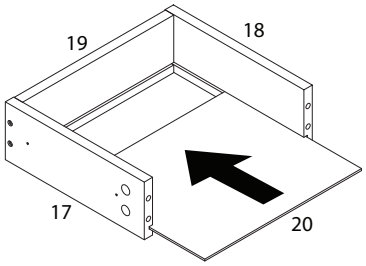

25

B
x 8

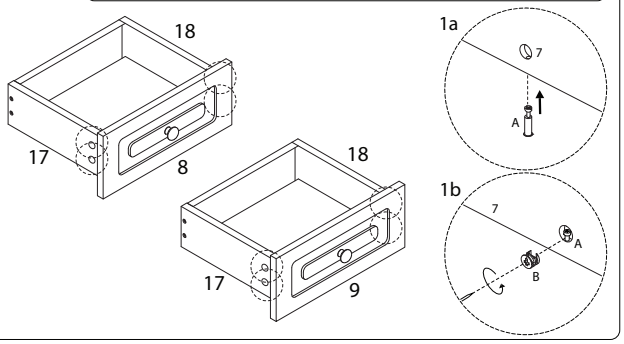

26

D	H2
M3.5 x 14 x 8	x 1

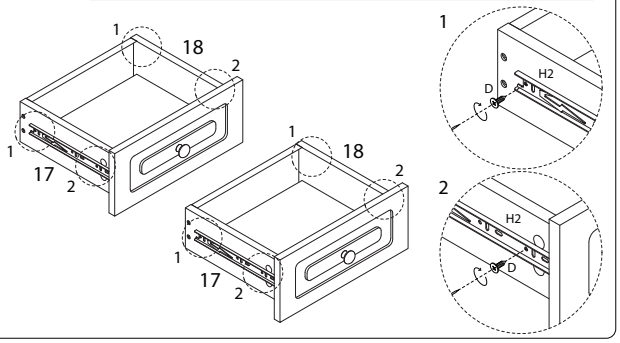

27

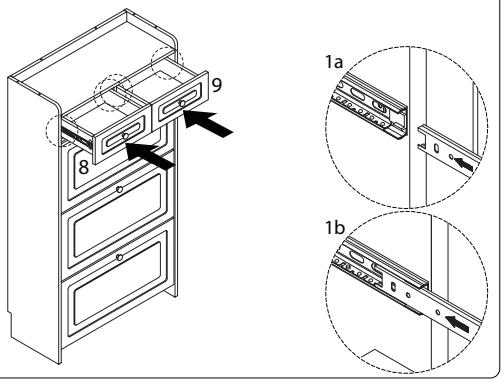

28

E
x 4

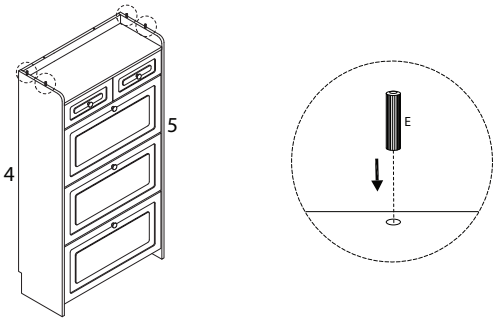

29

B
x 2

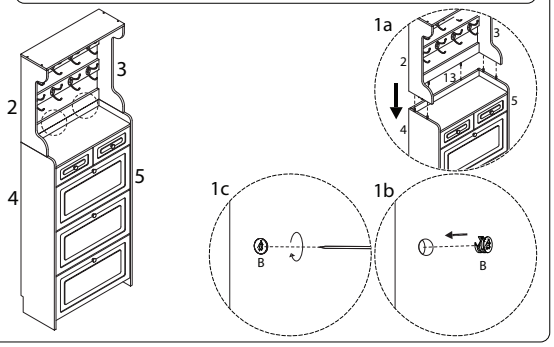

30

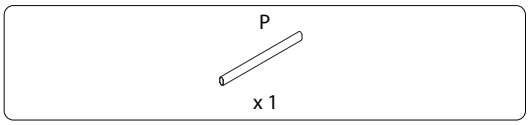
P
x 1

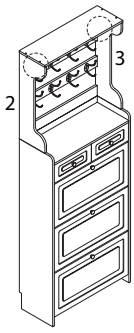
2
3

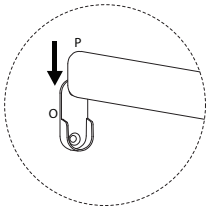
P
O

31

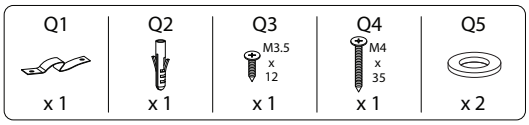
Q1
x 1
Q2
x 1
Q3
M3.5
x
12
x 1
Q4
M4
x
35
x 1
Q5
x 2

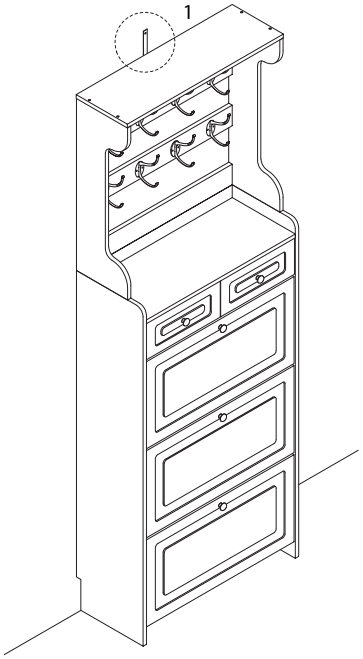
1

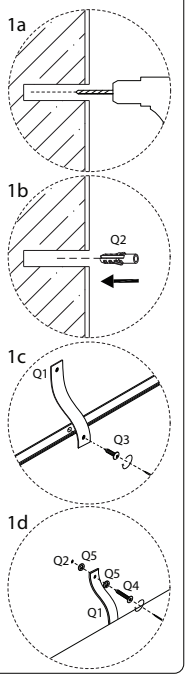
1a
1b
Q2
1c
Q1
Q3
1d
Q2
Q5
Q5
Q4
Q1