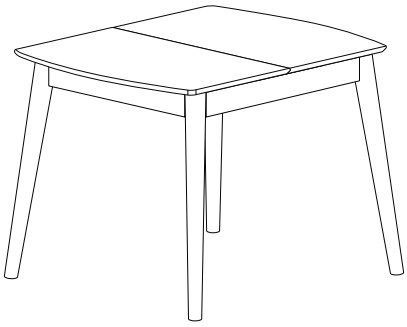

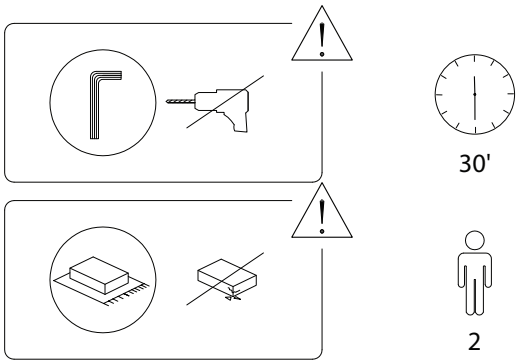
30'
2

1/4



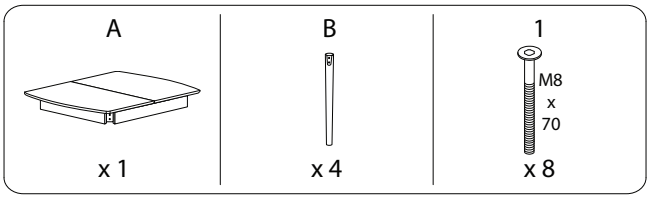
A
x 1
B
x 4
1
M8
x
70
x 8

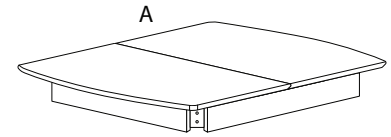
A

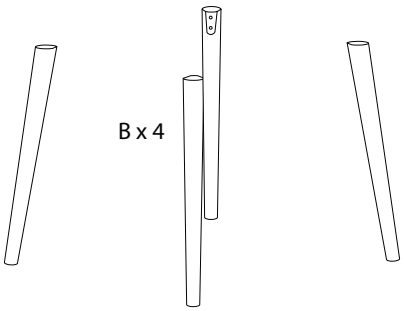
B x 4

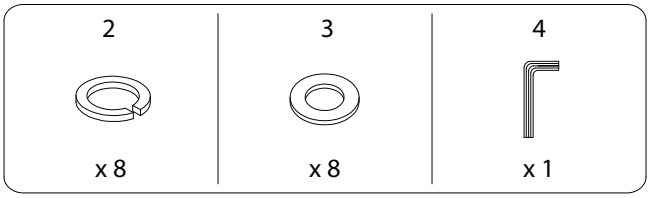
2
x 8
3
x 8
4
x 1

2/4



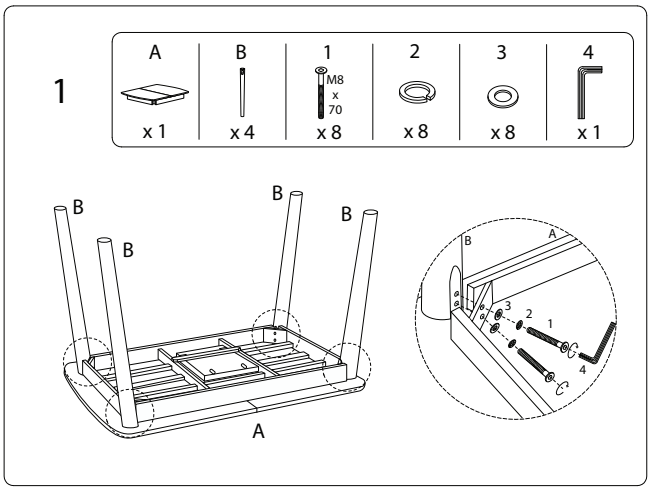
1
A
x 1
B
x 4
1
M8
x
70
x 8
2
x 8
3
x 8
4
x 1
B
B
B
B
A
A
B
3
2
1
4

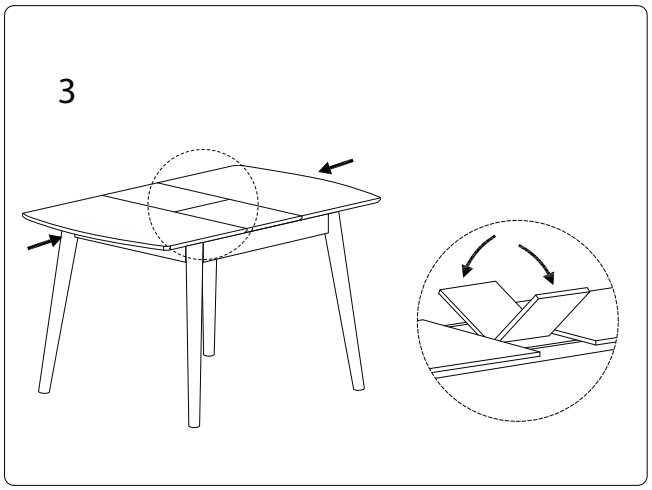
3

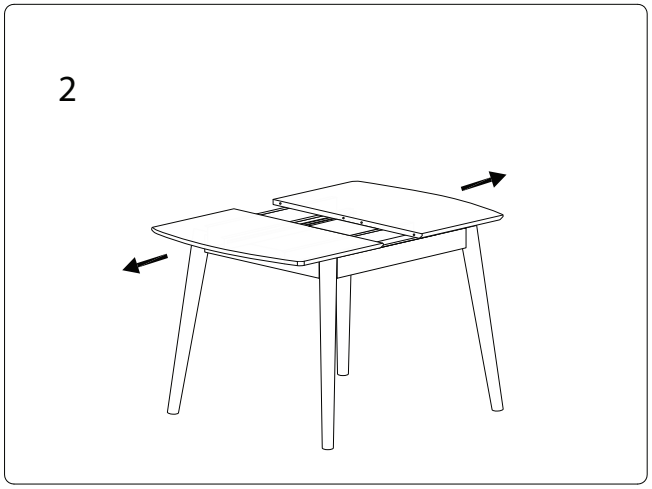
2

3/4



4/4