# GENOA

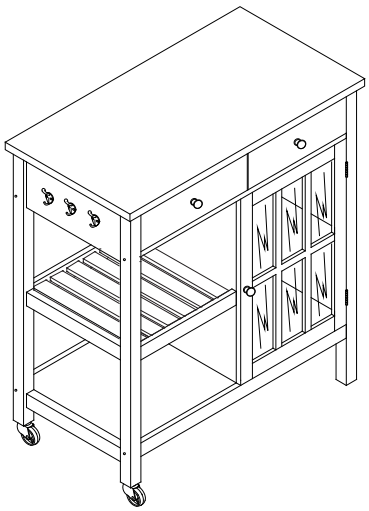

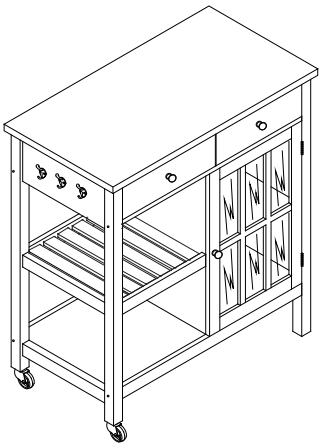

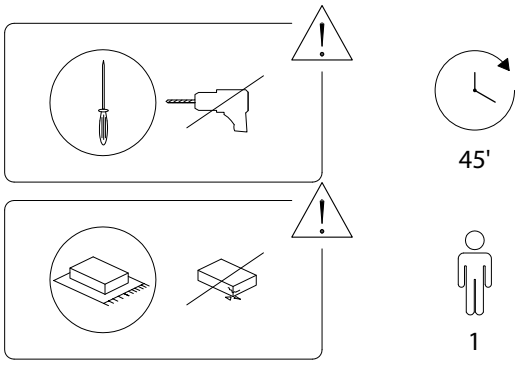


1/23



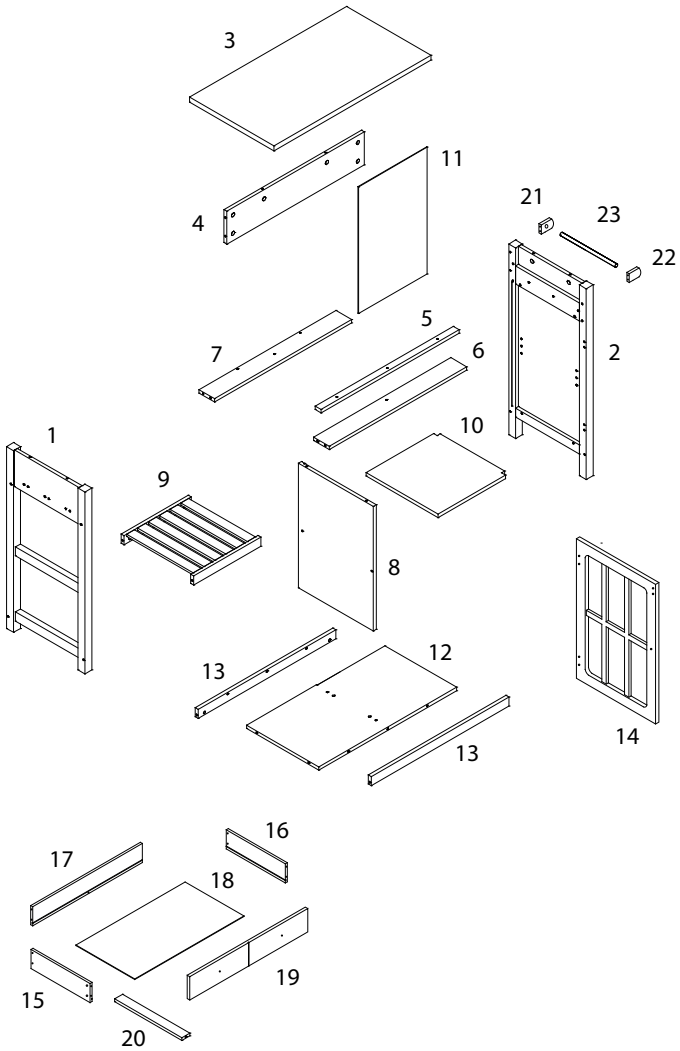


2/23

| | | | |
|---|---|---|---|
| 1  x 1 | 2  x 1 | 3 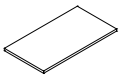 x 1 | 4 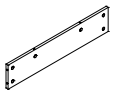 x 1 |
| 5 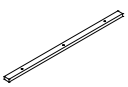 x 1 | 6 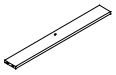 x 1 | 7 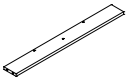 x 1 | 8 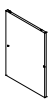 x 1 |
| 9 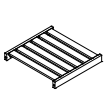 x 1 | 10 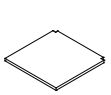 x 1 | 11  x 1 | 12 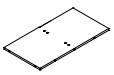 x 1 | 13  x 2 |
| 14  x 1 | 15  x 1 | 16  x 1 | 17  x 1 | 18 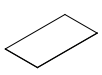 x 1 |
| 19  x 1 | 20  x 1 | 21  x 1 | 22  x 1 | 23  x 1 |

3/23



680/GENOA/260225/

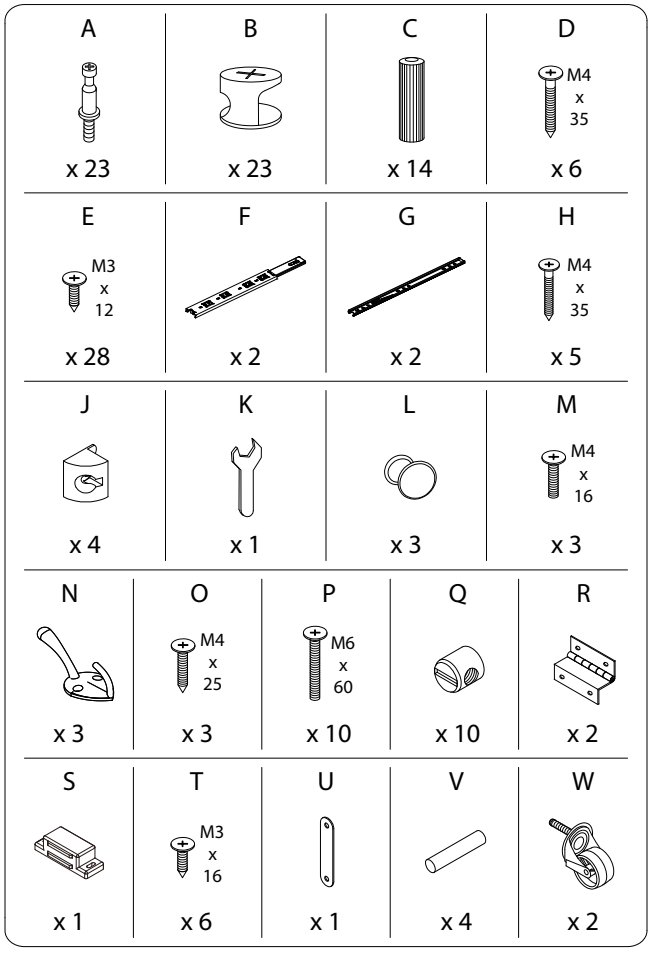
A
x 23
B
x 23
C
x 14
D
M4 x 35
x 6
E
M3 x 12
x 28
F
x 2
G
x 2
H
M4 x 35
x 5
J
x 4
K
x 1
L
x 3
M
M4 x 16
x 3
N
x 3
O
M4 x 25
x 3
P
M6 x 60
x 10
Q
x 10
R
x 2
S
x 1
T
M3 x 16
x 6
U
x 1
V
x 4
W
x 2





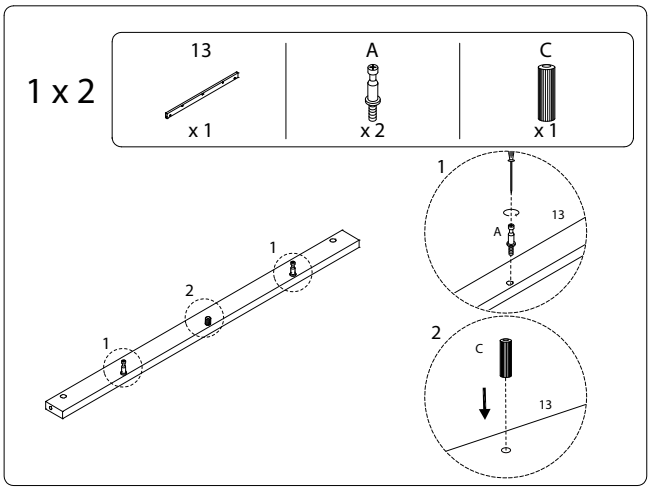
1 x 2
13
x 1
A
x 2
C
x 1
1
2
1
1
13
A
2
C
13

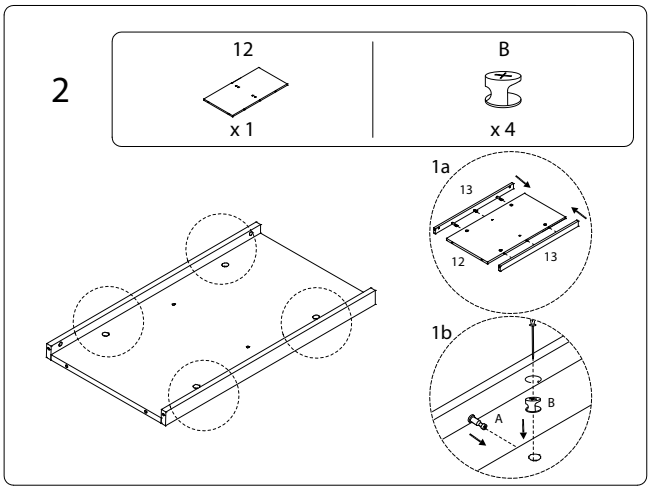
2
12
x 1
B
x 4
1a
13
12
13
1b
A
B





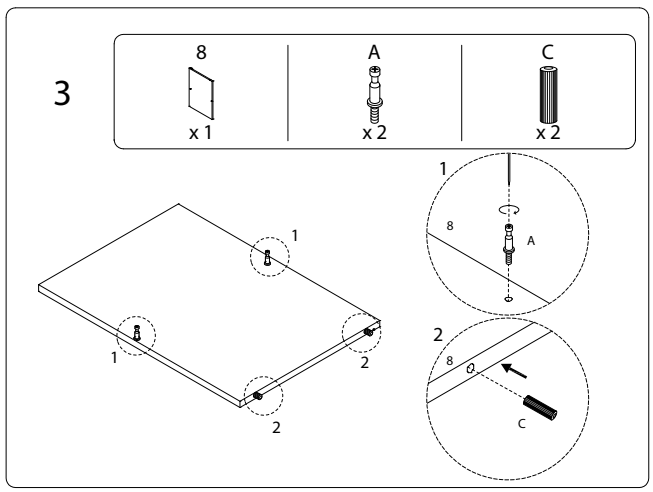
3
8
x 1
A
x 2
C
x 2
1
1
2
2
1
8
A
2
8
C

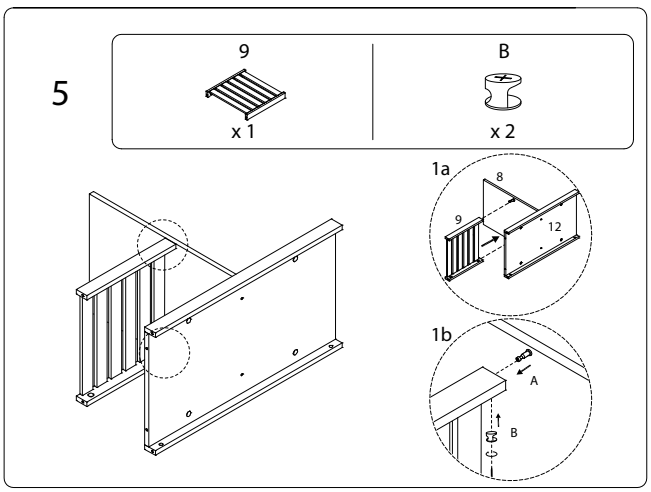
5
9
x 1
B
x 2
1a
8
9
12
1b
A
B

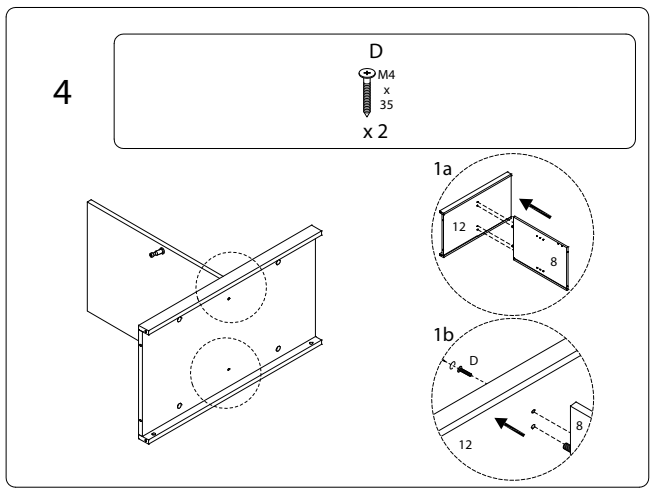
4
D
M4 x 35
x 2
1a
12
8
1b
D
8
12

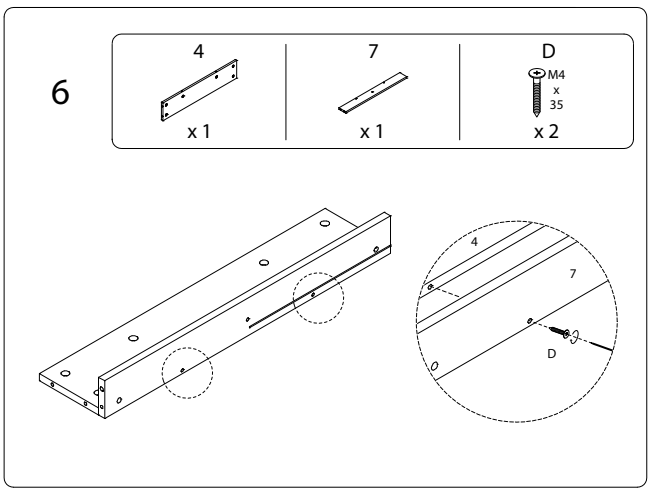
6
4
x 1
7
x 1
D
M4 x 35
x 2
4
7
D

7

D
M4 x 35
x 1

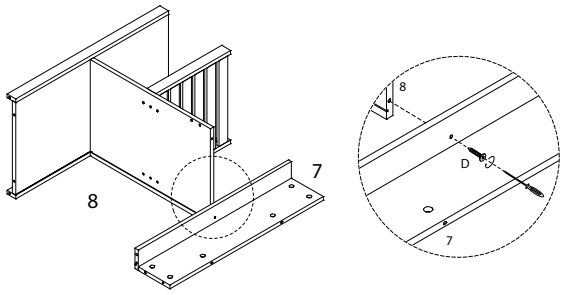





8

6
x 1

D
M4 x 35
x 1

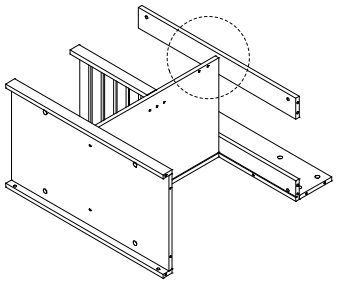

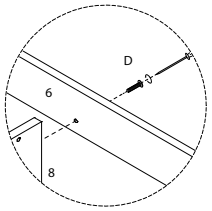






9

2
x 1

C
x 2

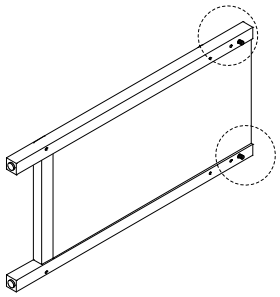

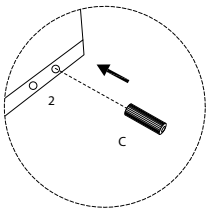


10

21
x 1

22
x 1

23
x 1

P
M6 x 60
x 2

Q
x 2

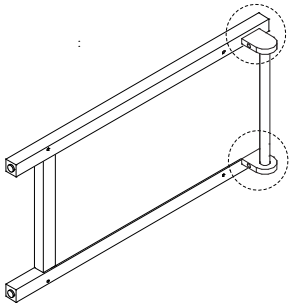

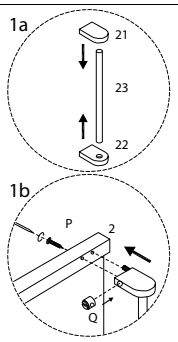






!

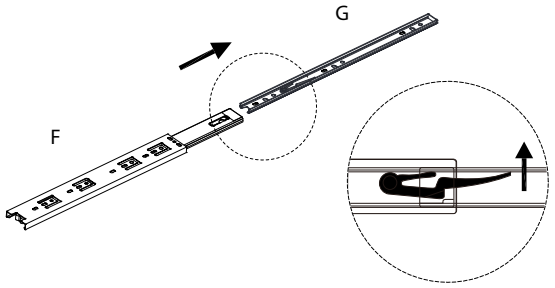


12

E
M3 x 12
x 3

F
x 1

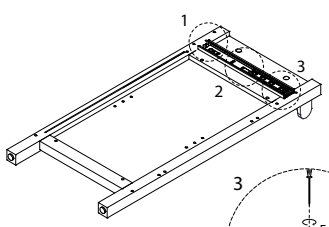


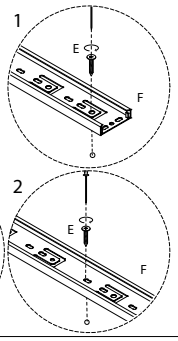


11

1
x 1

E
M3 x 12
x 3

F
x 1

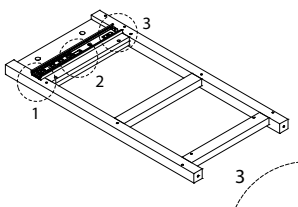


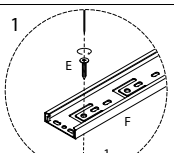


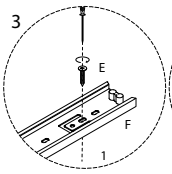


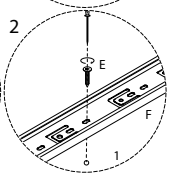






13

A
x 4

C
x 4

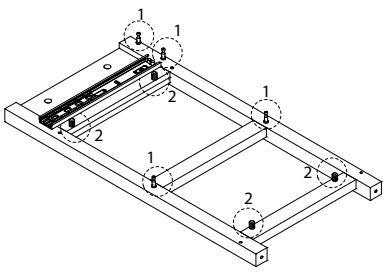


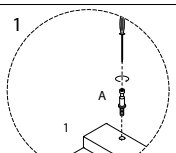


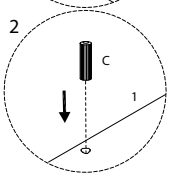

## 14

A x 2 | C x 4

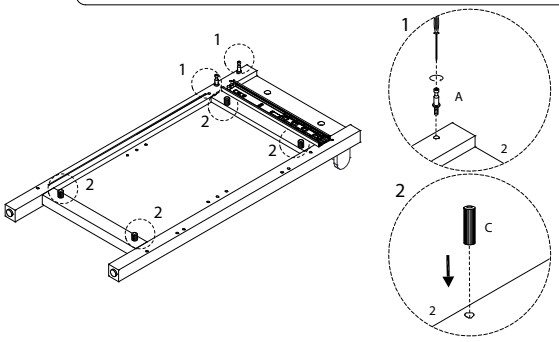

## 15

11 x 1

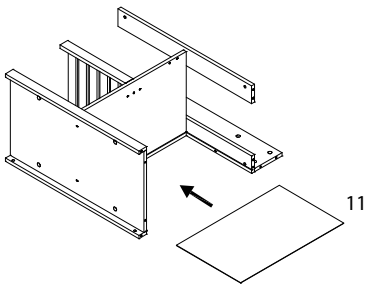





## 16

B x 2 | P M6 x 60 x 4 | Q x 4

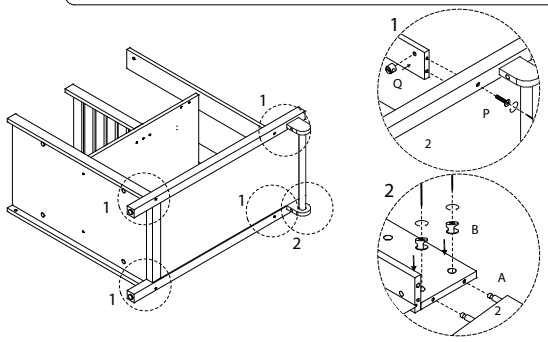

## 17

B x 4 | P M6 x 60 x 4 | Q x 4

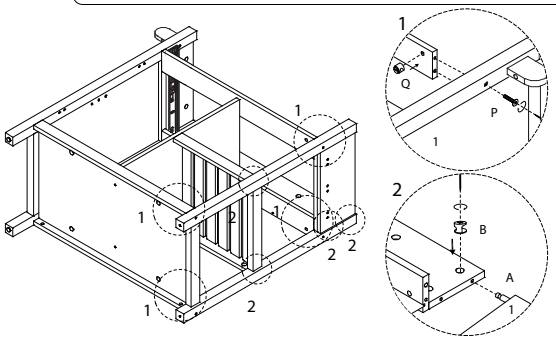





## 18

K x 1 | W x 2

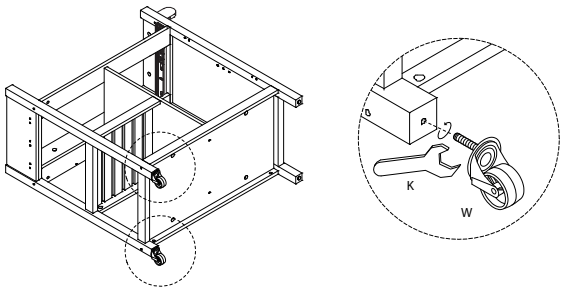

## 19

E M3 x 12 x 6 | N x 3 | S x 1 | T M3 x 16 x 2

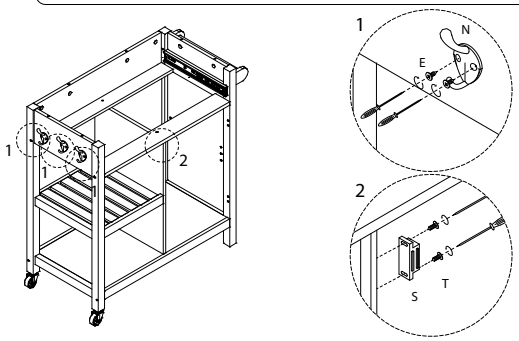





## 20

3 x 1 | 5 x 1 | A x 6 | O M4 x 25 x 3

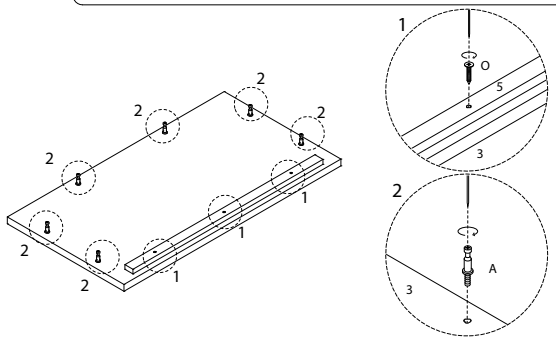

## 21

B x 6

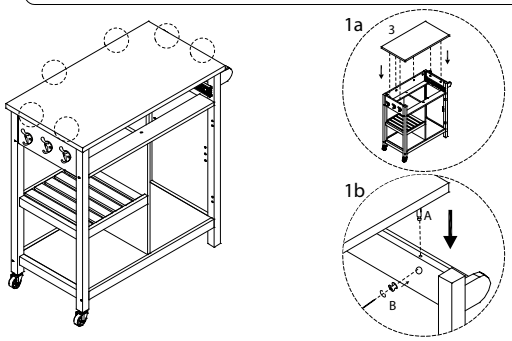

## 22

| 14 | E | R | U |
|---|---|---|---|
| x 1 | M3 x 12 x 6 | x 2 | x 1 |

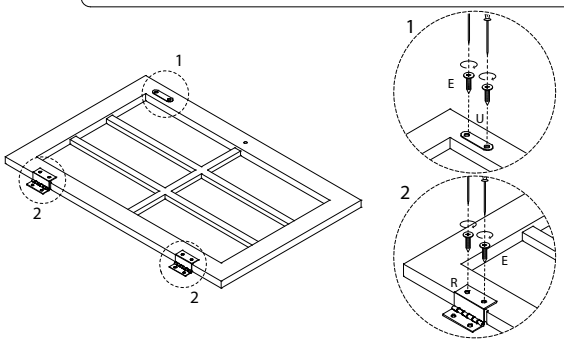





## 23

| E |
|---|
| M3 x 12 x 4 |

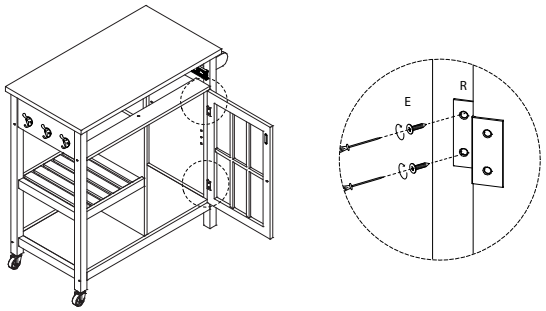






## !

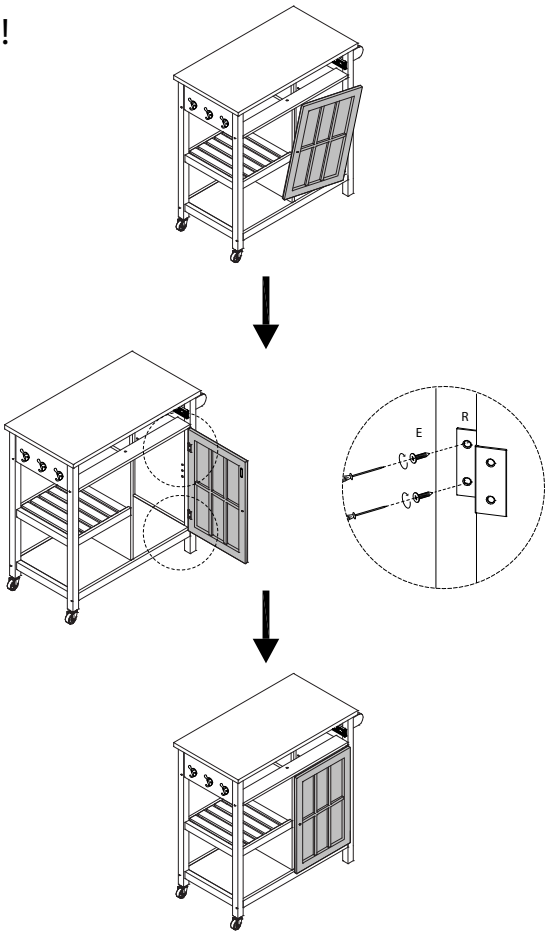






## 24

| L | M |
|---|---|
| x 1 | M4 x 16 x 1 |

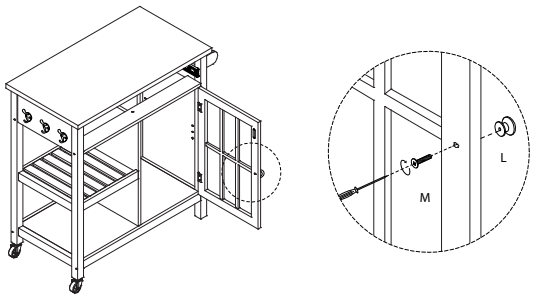


## 26

| 10 |
|---|
| x 1 |

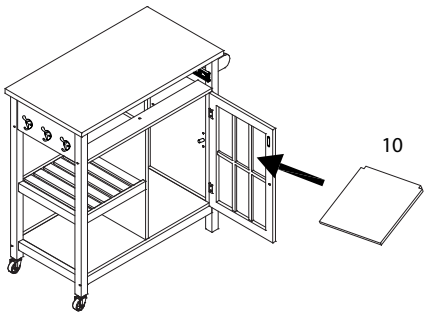


## 25

| V |
|---|
| x 4 |

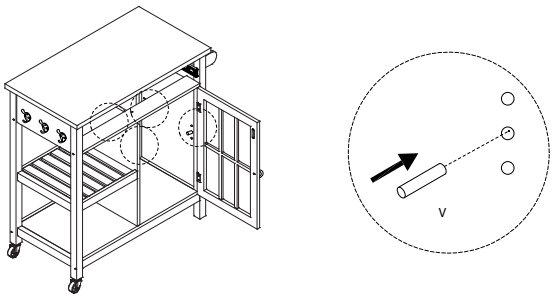






## 27

| 19 | A |
|---|---|
| x 1 | x 5 |

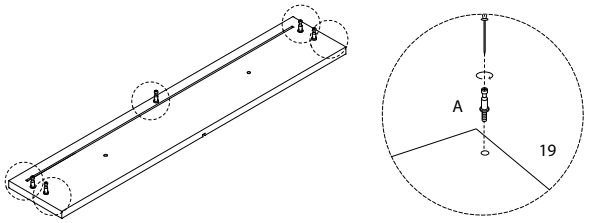

## 28

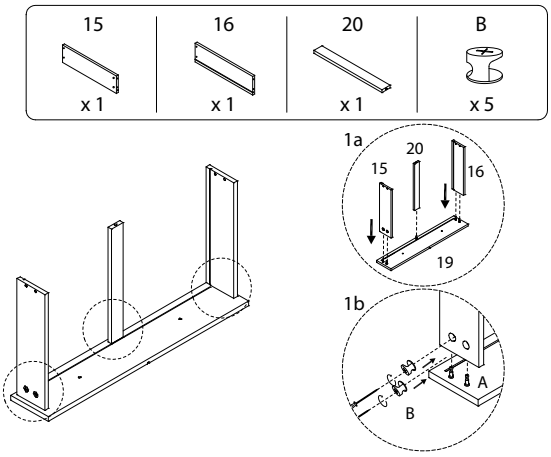


## 29

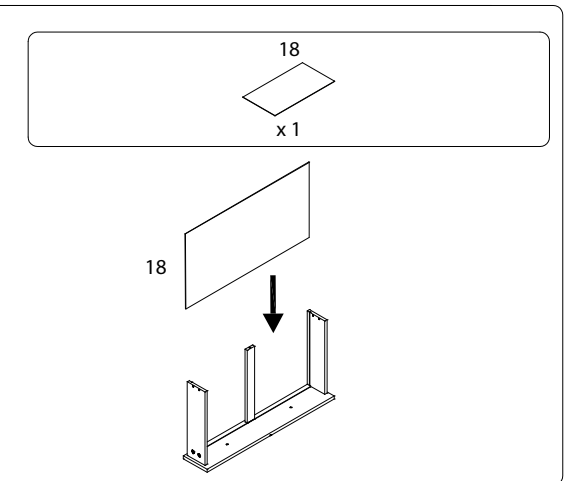






## 30

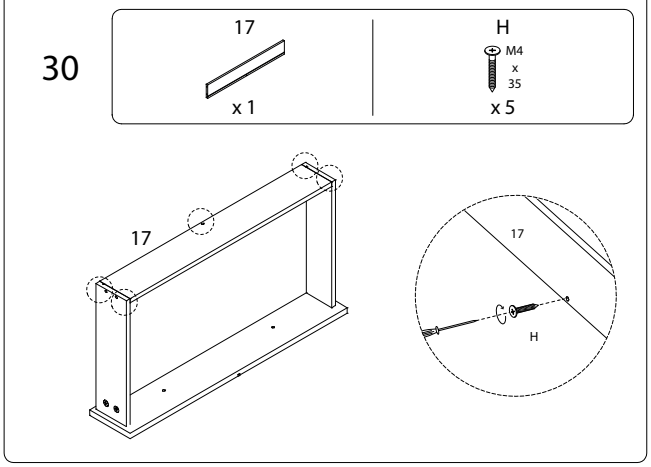


## 31

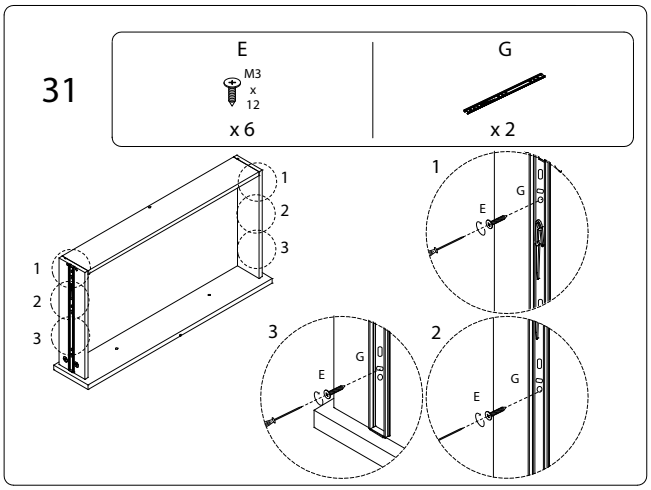






## 32

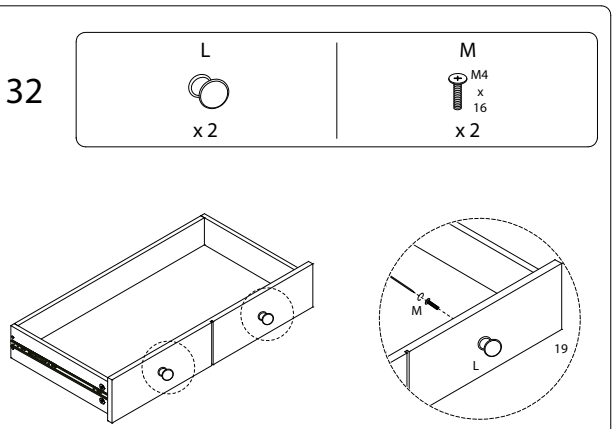


## 33

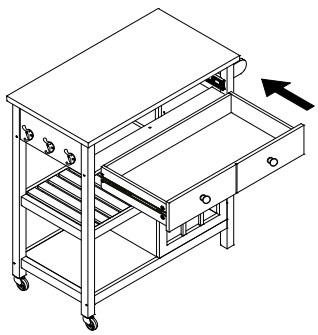

## 34

