ARDAL

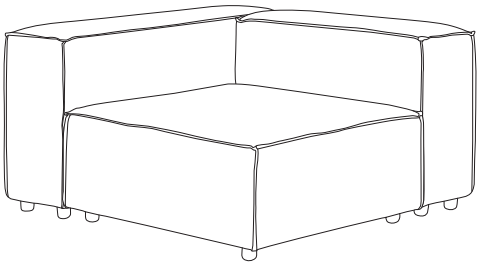

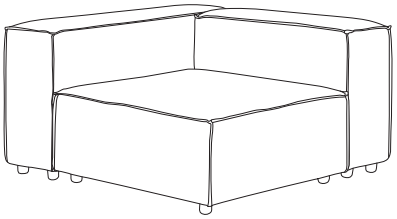

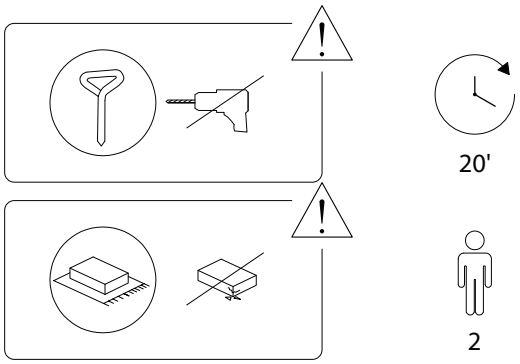

1/5

600/ARDAL/270225/

A	B_1	C	D	E
x 1	x 1	x 1	x 12	x 8

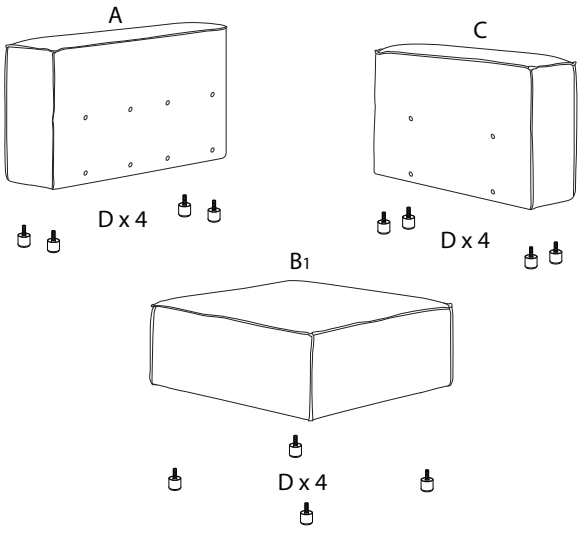

F	G_1	G_2	H	I
x 8	x 2	x 2	M5 x 25 x 8	x 1

2/5

600/ARDAL/270225/

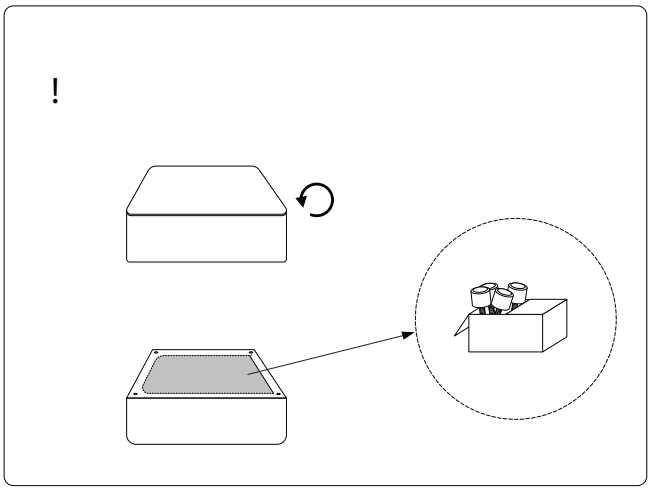

1

A	B_3	C	D
x 1	x 1	x 1	x 12

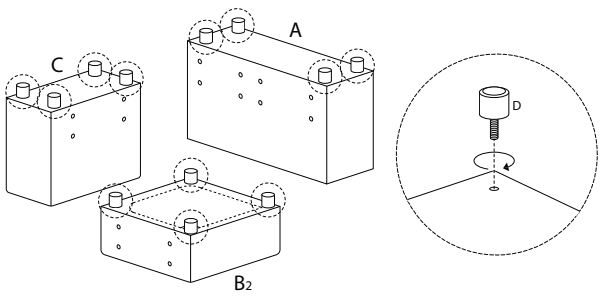

3/5

600/ARDAL/270225/

2R

E	F
x 4	x 4

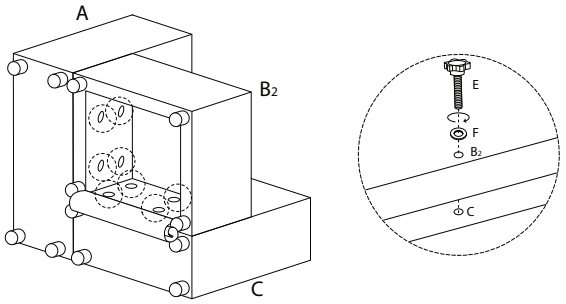

2L

E	F
x 4	x 4

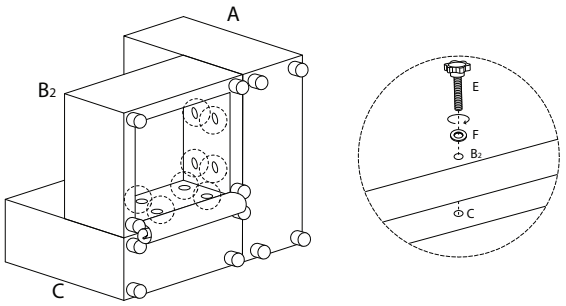

3R

G1	H	I
x 2	M5 x 25 x 4	x 1

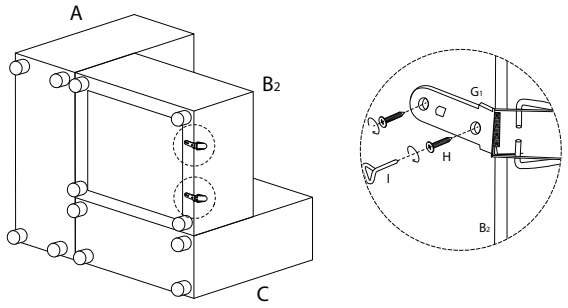

3L

G2	H	I
x 2	M5 x 25 x 4	x 1

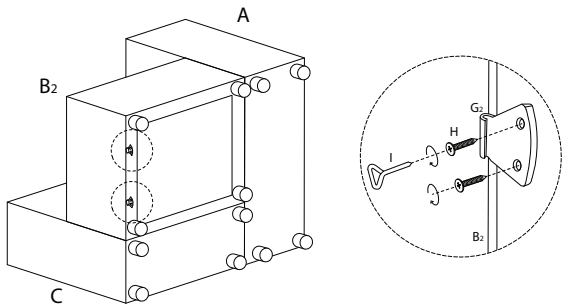

!

