MADISON

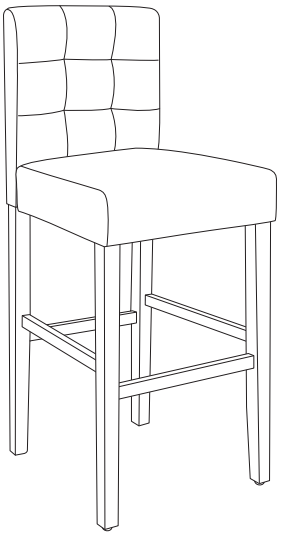

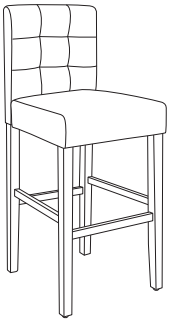

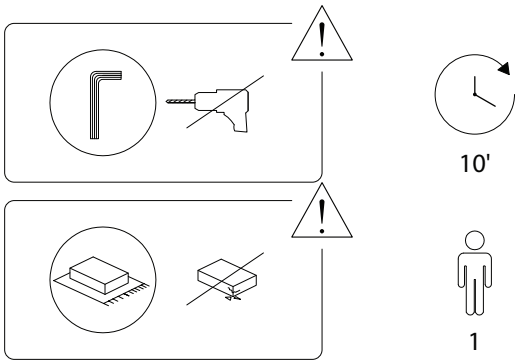

1/5

A	B	C	D	E
x 1	x 1	x 2	x 2	x 1

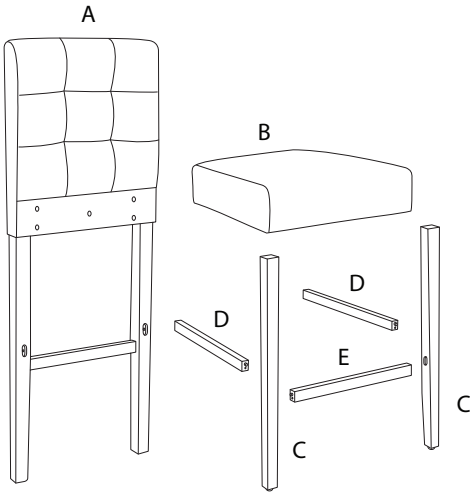

F	G	H	J	K	L
M8 x 55	M8 x 70	M4 x 45			
x 1	x 8	x 6	x 9	x 9	x 1

2/5

1

A	B	F	G	J	K	L
		M8 x 55	M8 x 70			
x 1	x 1	x 1	x 4	x 5	x 5	x 1

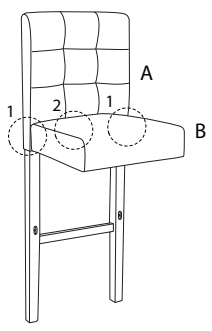

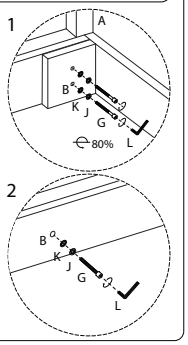

2

C	G	J	K	L
	M8 x 70			
x 2	x 4	x 4	x 4	x 1

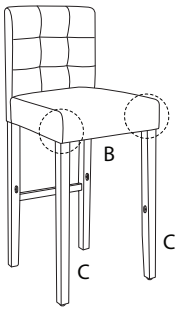

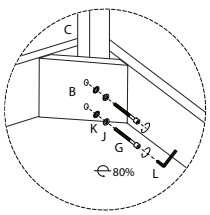

3/5

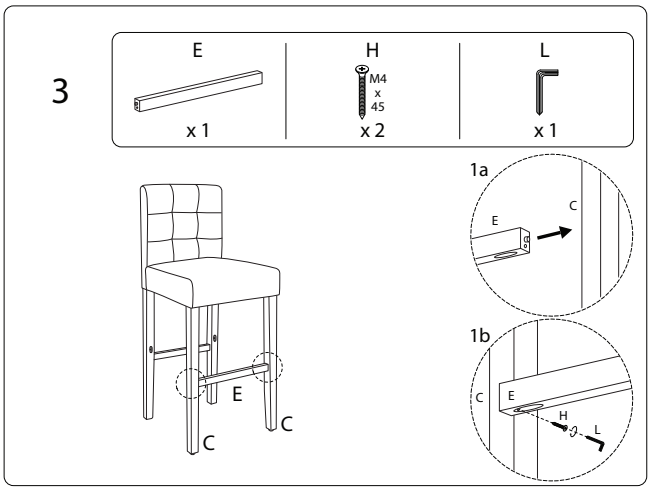
3
E
x 1
H
M4
x
45
x 2
L
x 1
1a
E
C
1b
C
E
H
L
E
C
C

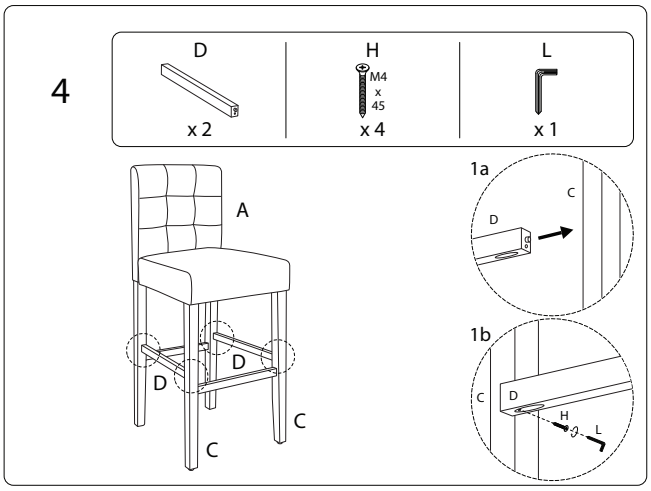
4
D
x 2
H
M4
x
45
x 4
L
x 1
1a
D
C
1b
C
D
H
L
A
D
D
C
C

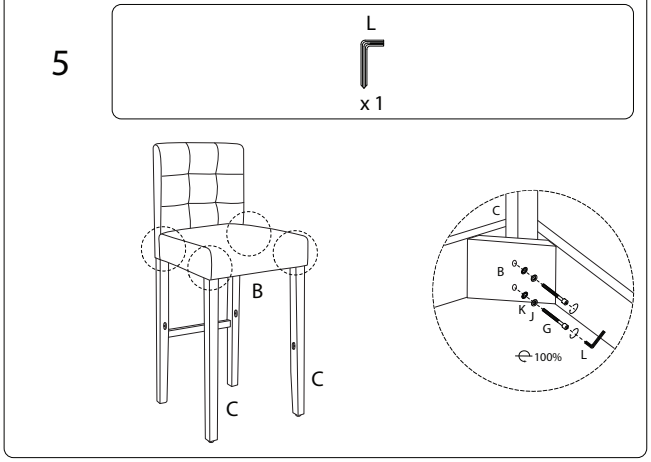
5
L
x 1
B
C
C
C
B
K
J
G
L
100%