CANOAS

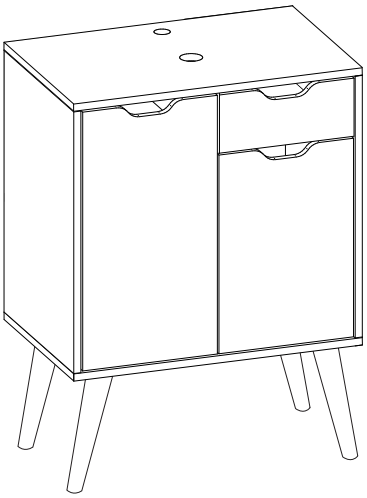

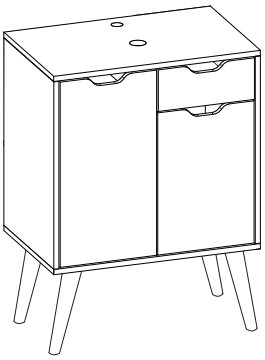

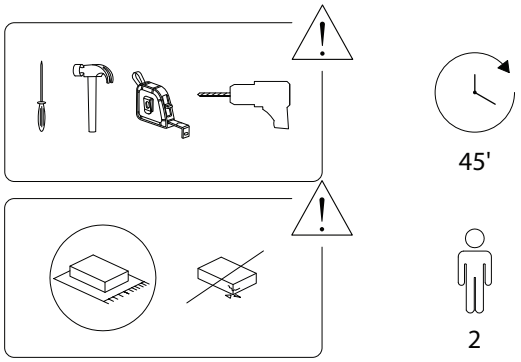
45'
2

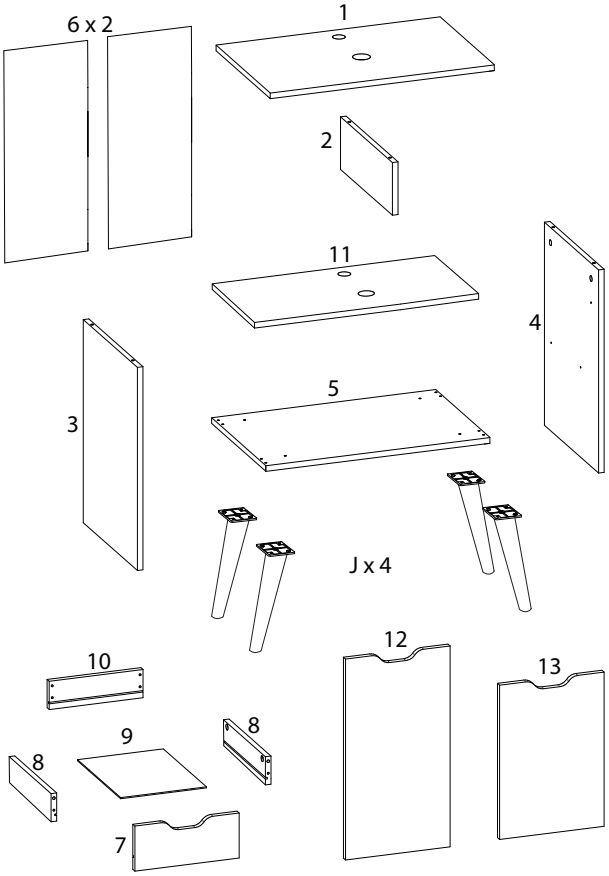
6 x 2
1
2
11
4
3
5
J x 4
10
12
13
9
8
8
7

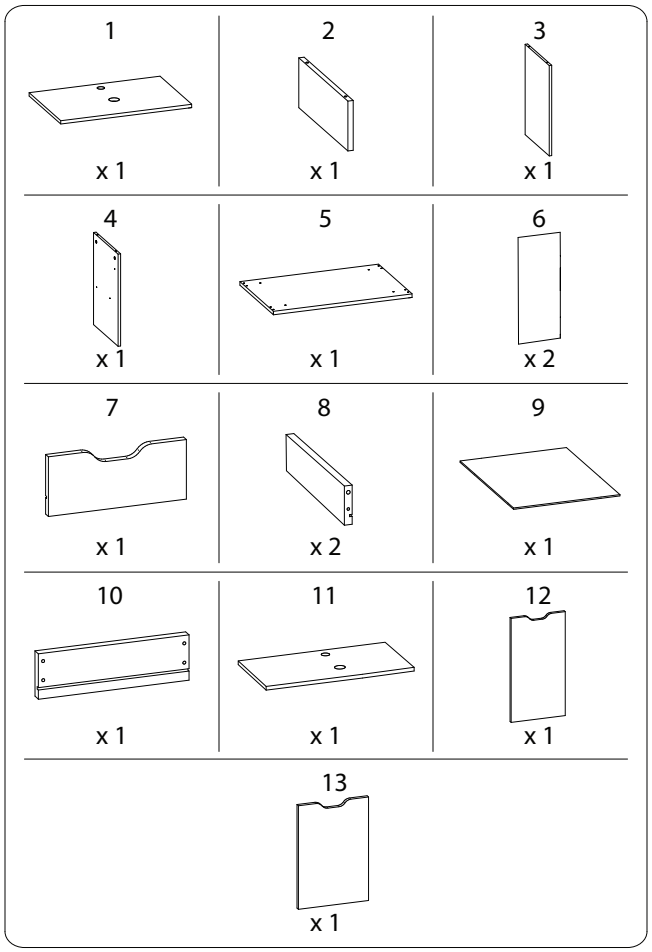
1
x 1
2
x 1
3
x 1
4
x 1
5
x 1
6
x 2
7
x 1
8
x 2
9
x 1
10
x 1
11
x 1
12
x 1
13
x 1

A	B	C	D
M3.5 x 14		M3.5 x 40	
x 26	x 8	x 4	x 4
E	**F**	**G**	**H**
M5 x 50			M3.5 x 12
x 2	x 4	x 24	x 4
I	**J**	**K**	**L**
M3.5 x 16			
x 16	x 4	x 10	x 10
M	**N_1**	**N_2**	**O_1**
M5 x 40			
x 4	x 2	x 2	x 2
O_2		**P**	
x 2		x 2	

!

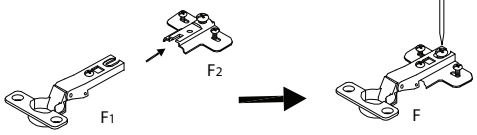

1

1	7	10	K
x 1	x 1	x 1	x 10

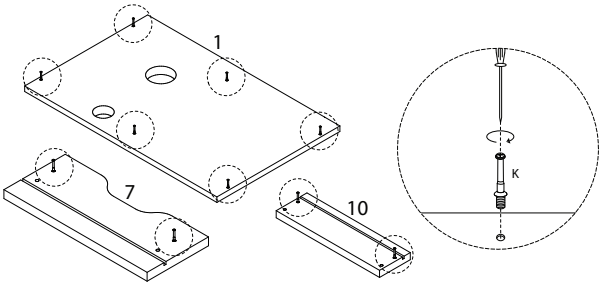

2

2	3	4	8	A	B	D	N_1
				M3.5 x 14			
x 1	x 1	x 1	x 2	x 4	x 8	x 4	x 2

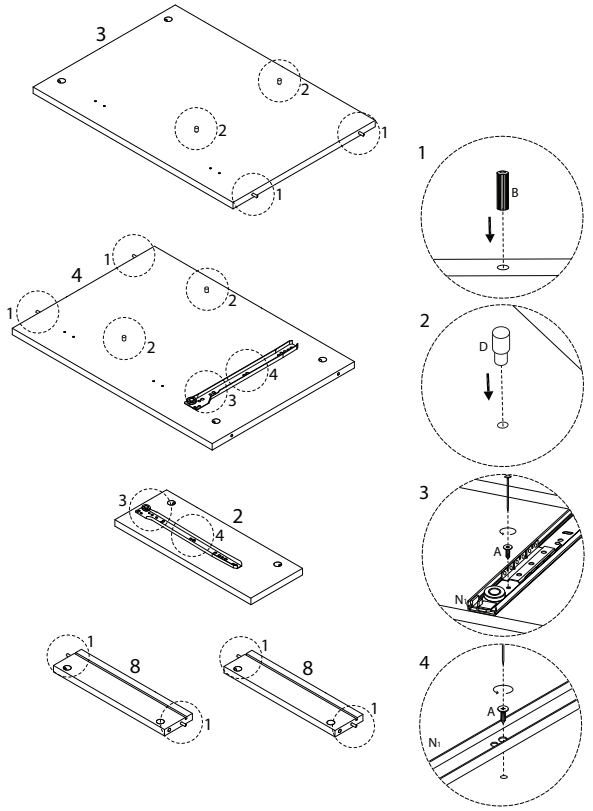

3

A	O_1
M3.5 x 14	
x 6	x 2

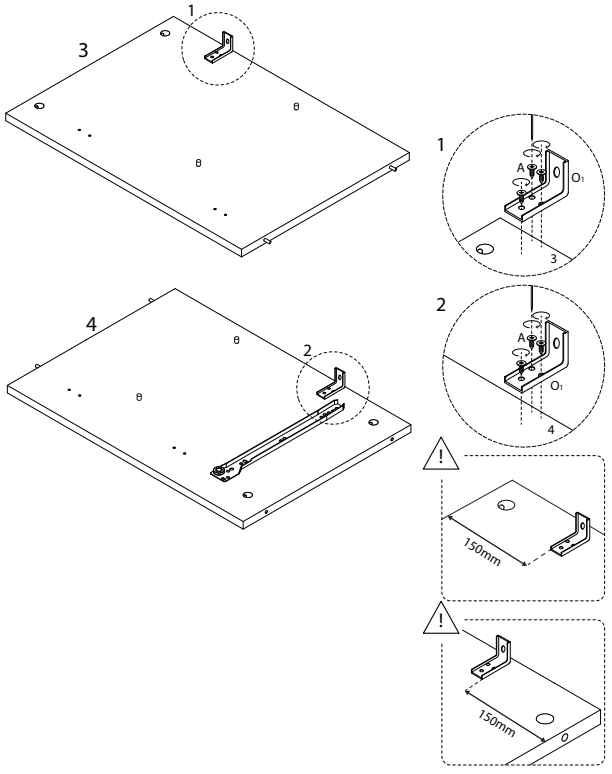

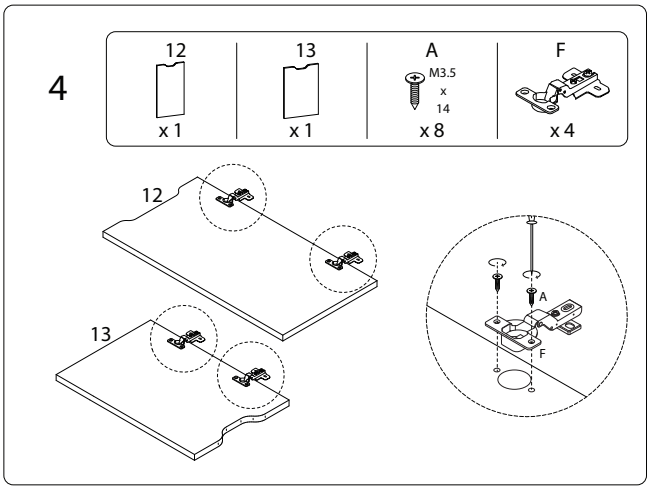
4
12
x 1
13
x 1
A
M3.5
x
14
x 8
F
x 4
12
13
A
F

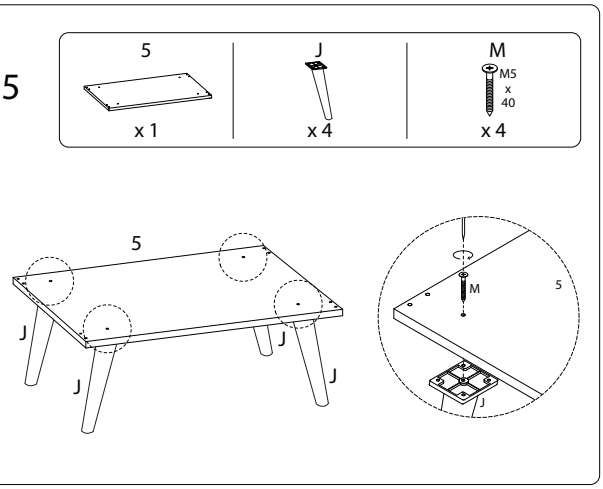
5
5
x 1
J
x 4
M
M5
x
40
x 4
5
J
J
J
J
M
5
J

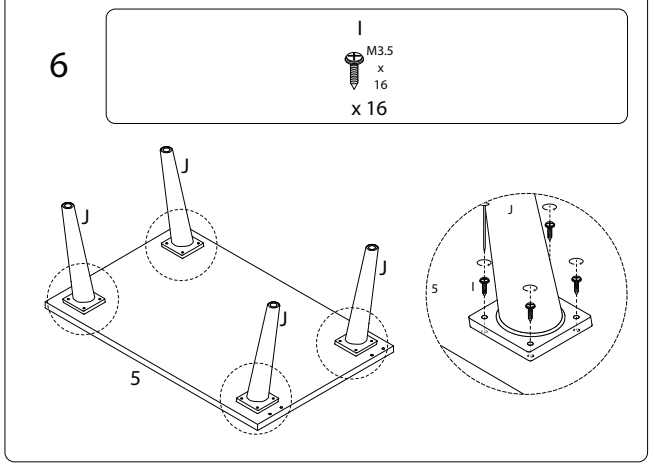
6
I
M3.5
x
16
x 16
J
J
J
J
5
J
5
I

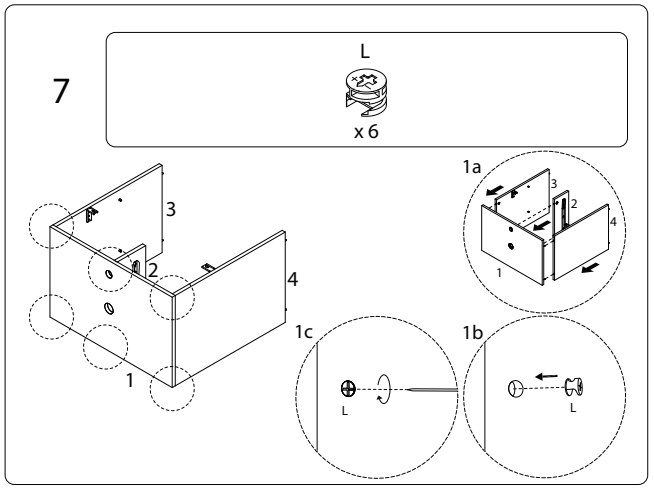
7
L
x 6
3
2
4
1
1a
3
2
4
1
1c
L
1b
L

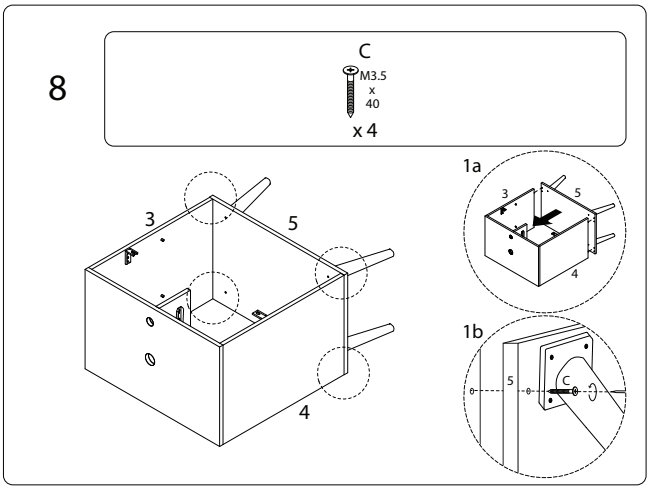
8
C
M3.5
x
40
x 4
3
5
4
1a
3
5
4
1b
5
C

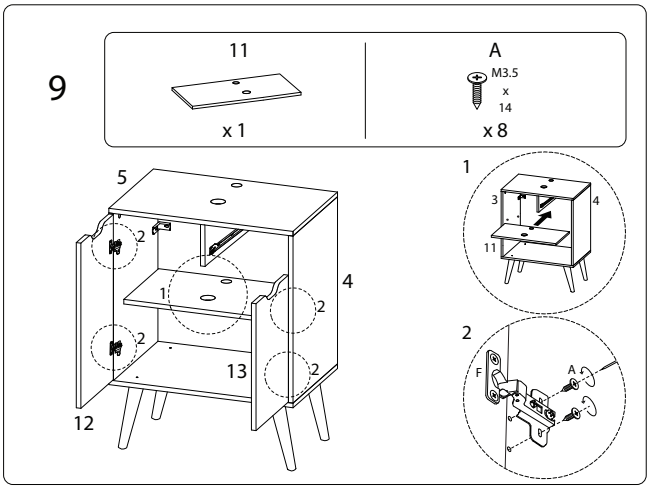
9
11
x 1
A
M3.5
x
14
x 8
5
2
1
2
2
13
2
12
4
1
3
4
11
2
F
A

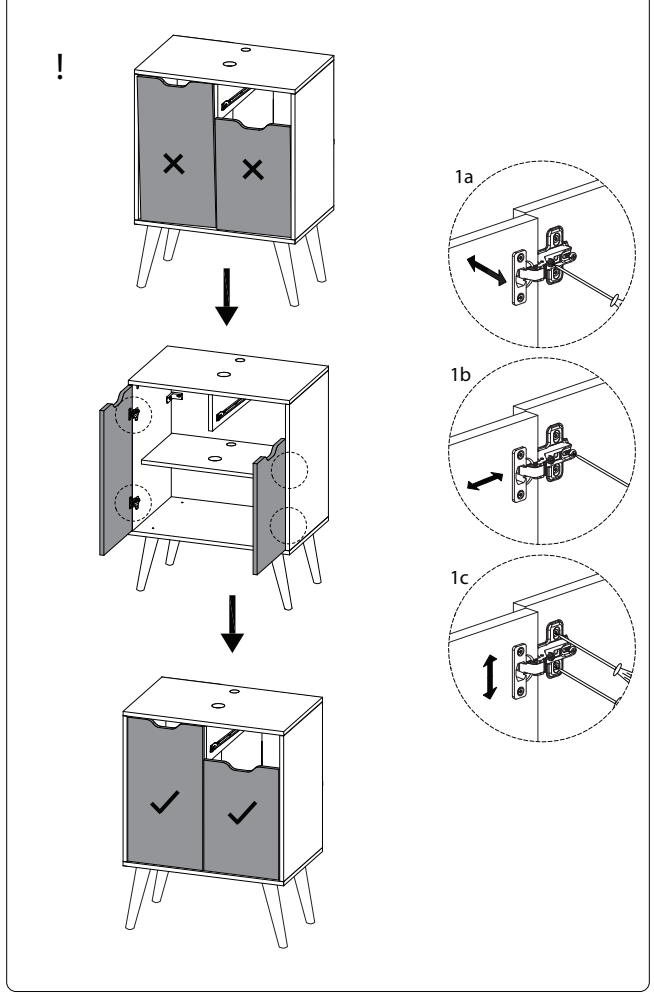
!
1a
1b
1c

10

6 x 2 | G x 24

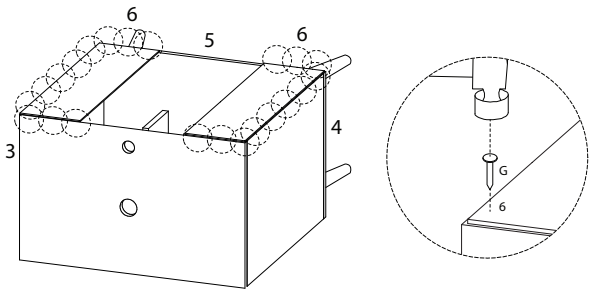

12

N_2 x 2 | H M3.5 x 12 x 4

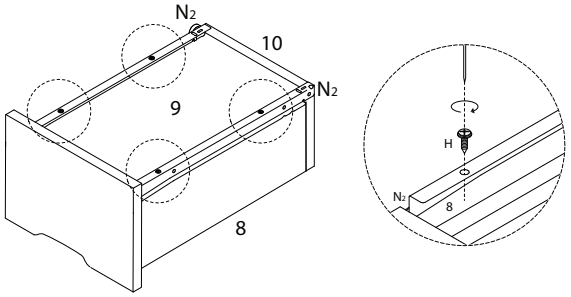

11

9 x 1 | L x 4

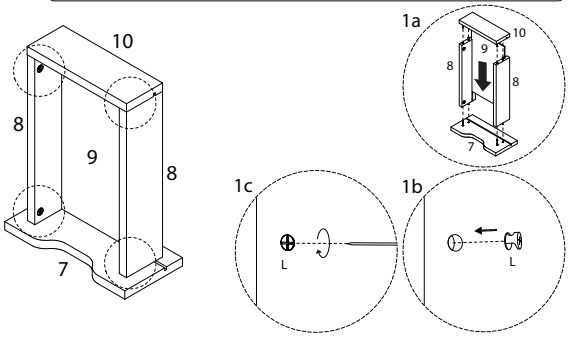

13

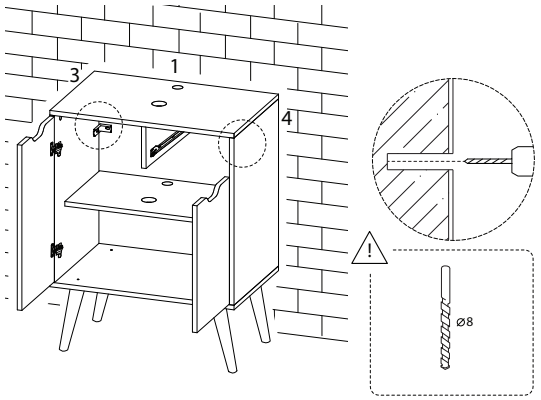

14

O_2 x 2 | P x 2 | E M5 x 50 x 2

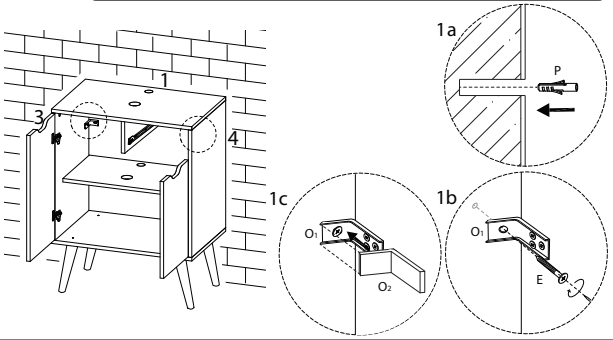

15

