ATHLETE

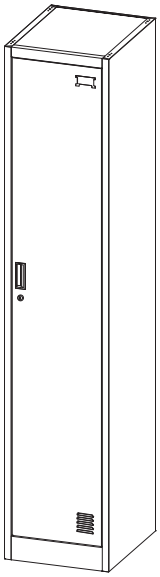

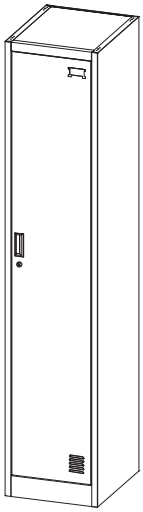

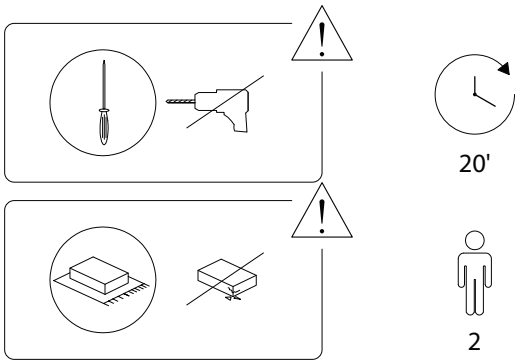

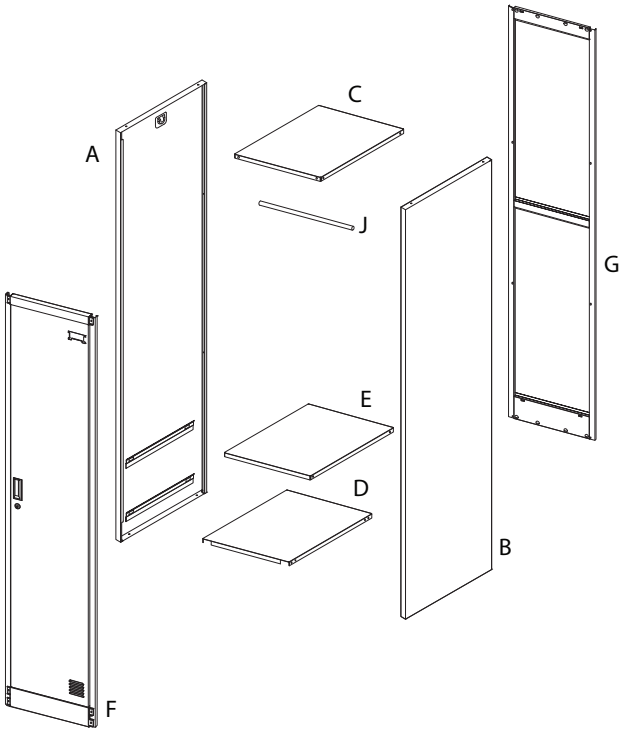

A	B
	
x 1	x 1

C	D	E
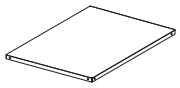	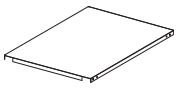	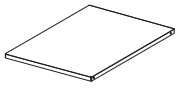
x 1	x 1	x 1

F	G
	
x 1	x 1

H	I	J
	 M5 x 12	
x 1	x 10	x 1

K	M
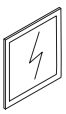	
x 1	x 2

1

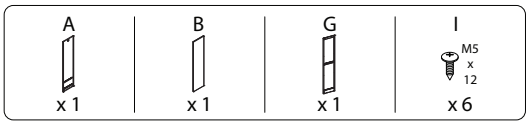
A
x 1
B
x 1
G
x 1
I
M5
x
12
x 6

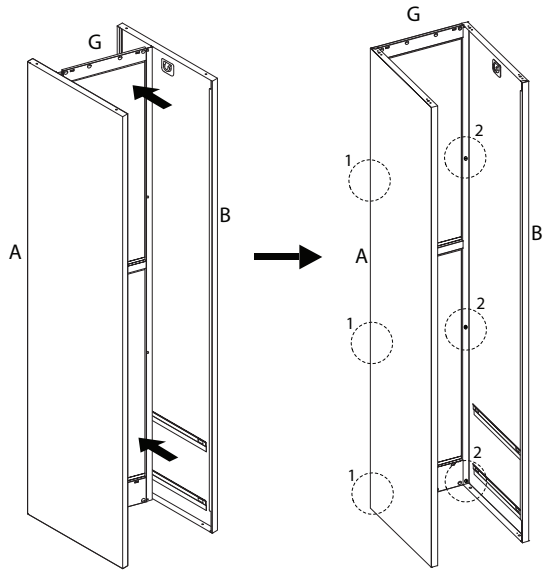
G
A
B
1
2
1
2
1
2
G
A
B

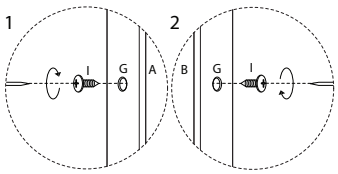
1
I
G
A
2
B
G
I

2

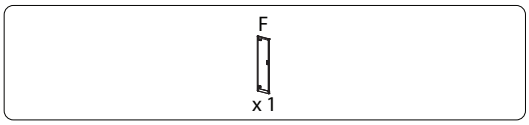
F
x 1

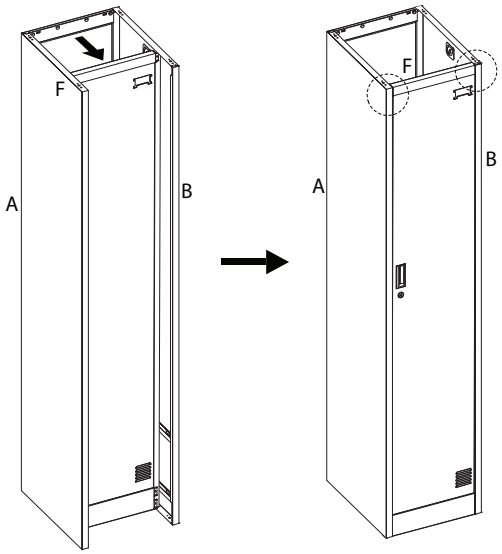
F
A
B
F
A
B

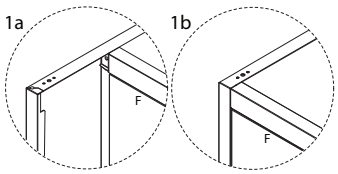
1a
F
1b
F

3

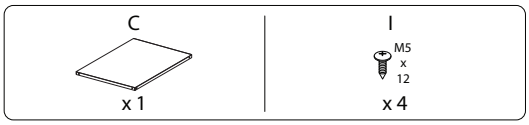
C
x 1
I
M5
x
12
x 4

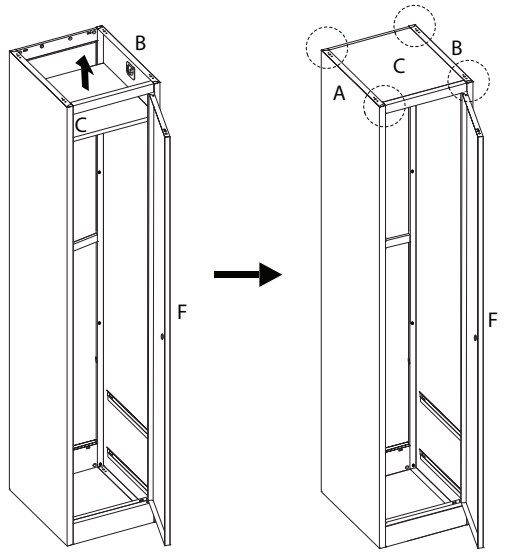
B
C
F
B
C
A
F

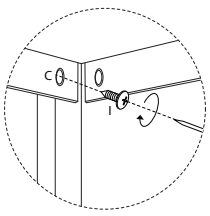
C
I

4

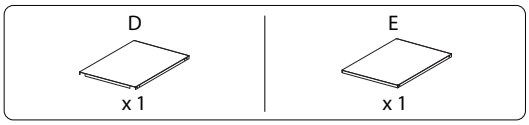
D
x 1
E
x 1

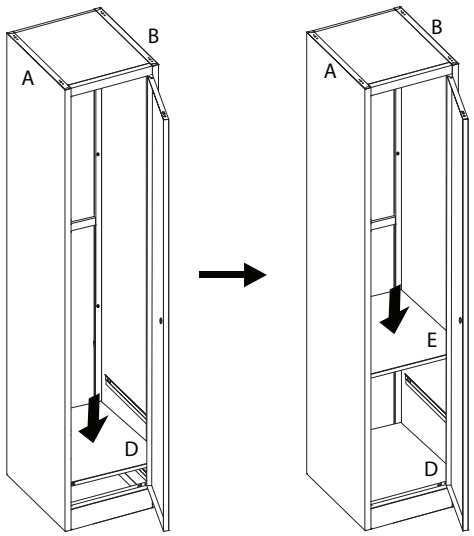
B
A
D
B
A
E
D

5

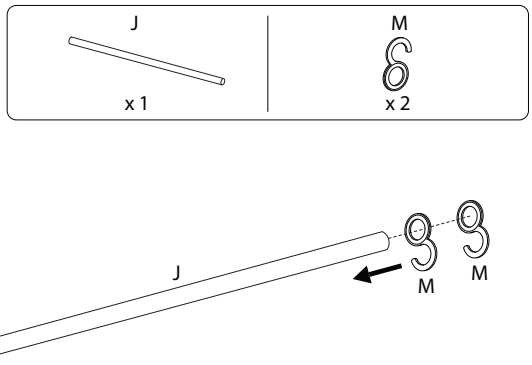

6

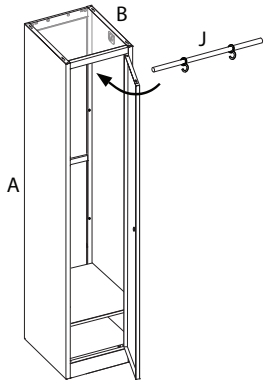

7

