LEDUC

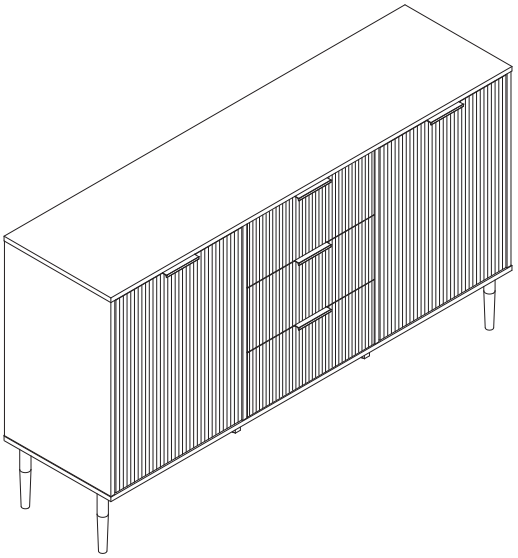

1/20

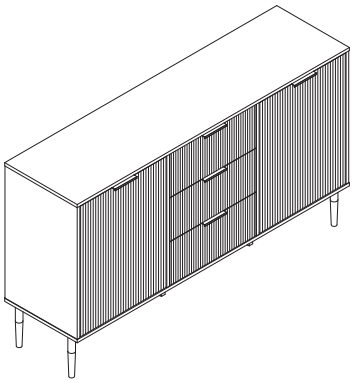

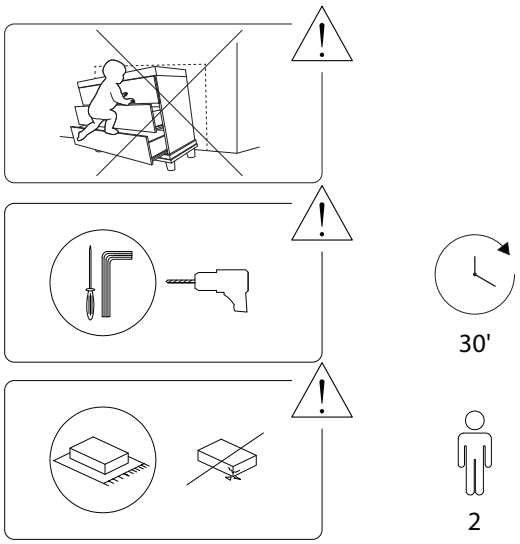

2/20

2619/LEDUC/200126/

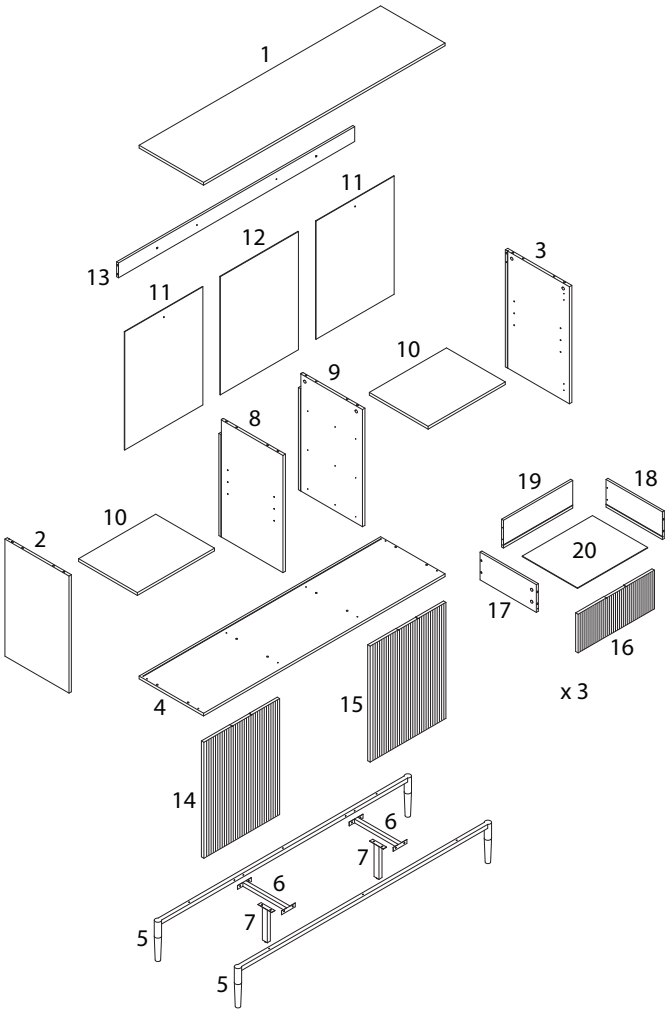

3/20

1 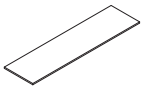 x 1	2  x 1	3 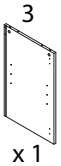 x 1	4 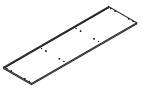 x 1
5 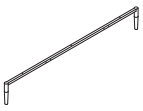 x 2	6 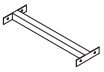 x 2	7  x 2	8 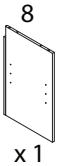 x 1
9 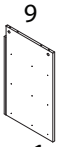 x 1	10 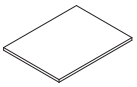 x 2	11 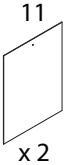 x 2	12 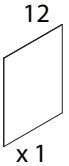 x 1
13 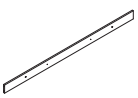 x 1	14 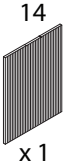 x 1	15  x 1	16 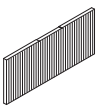 x 3
17 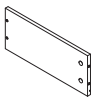 x 3	18 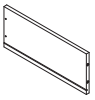 x 3	19 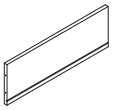 x 3	20 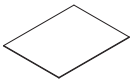 x 3

4/20

2619/LEDUC/200126/

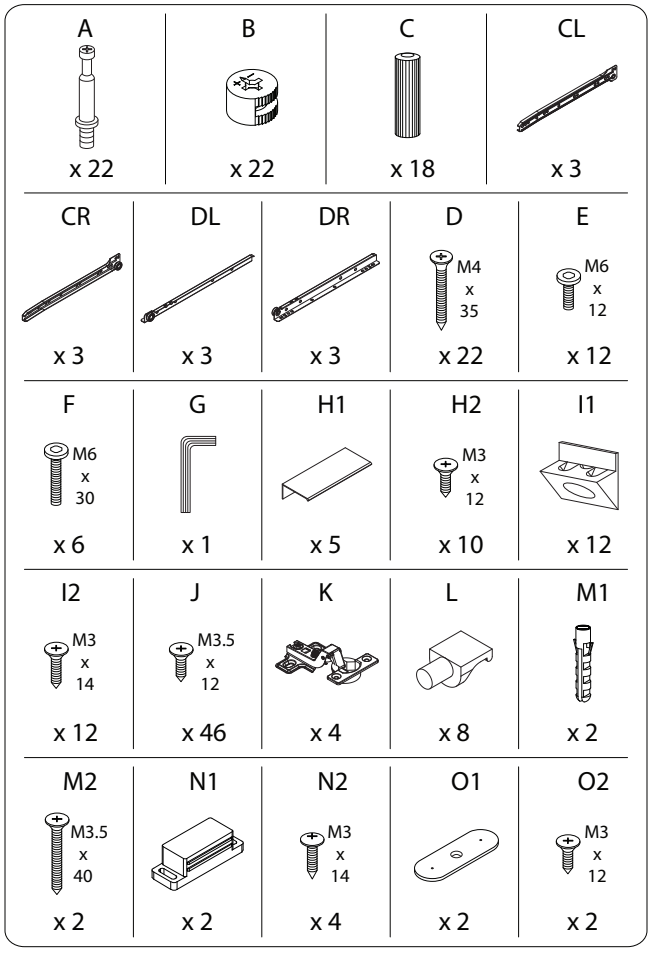
A
x 22
B
x 22
C
x 18
CL
x 3
CR
x 3
DL
x 3
DR
x 3
D
M4 x 35
x 22
E
M6 x 12
x 12
F
M6 x 30
x 6
G
x 1
H1
x 5
H2
M3 x 12
x 10
I1
x 12
I2
M3 x 14
x 12
J
M3.5 x 12
x 46
K
x 4
L
x 8
M1
x 2
M2
M3.5 x 40
x 2
N1
x 2
N2
M3 x 14
x 4
O1
x 2
O2
M3 x 12
x 2

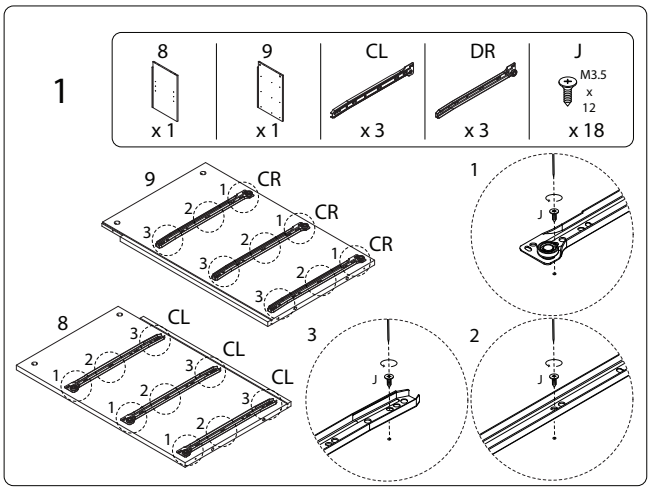
1
8
x 1
9
x 1
CL
x 3
DR
x 3
J
M3.5 x 12
x 18
9
CR
CR
CR
8
CL
CL
CL
1
J
2
J
3
J

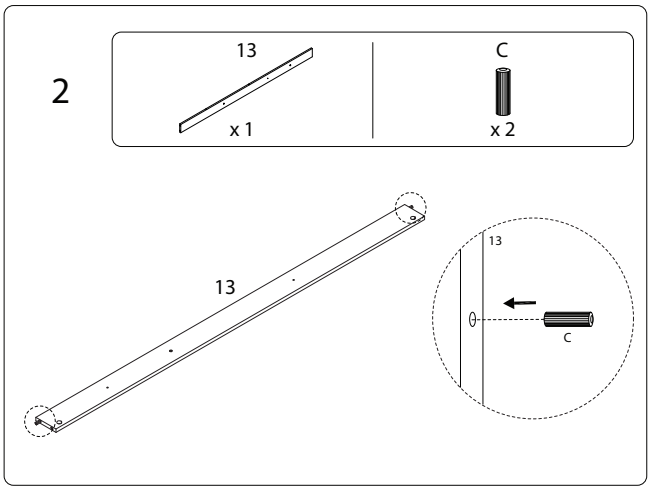
2
13
x 1
C
x 2
13
13
C

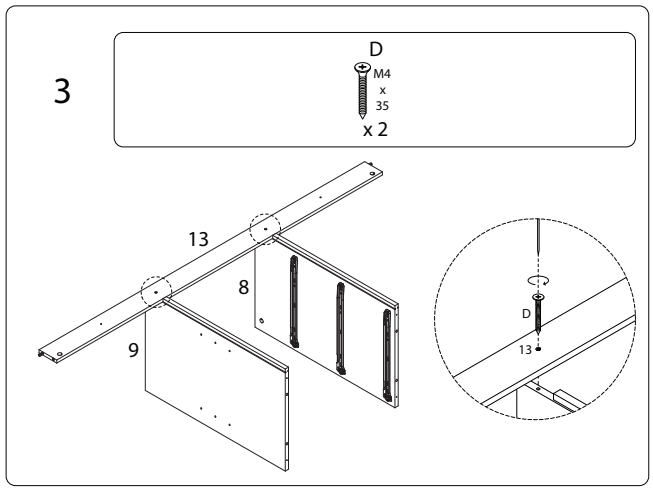
3
D
M4 x 35
x 2
13
8
9
D
13

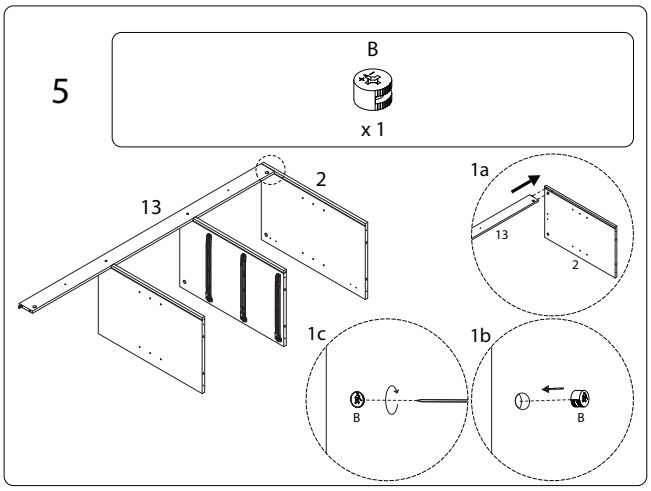
5
B
x 1
13
2
1a
13
2
1c
1b
B
B

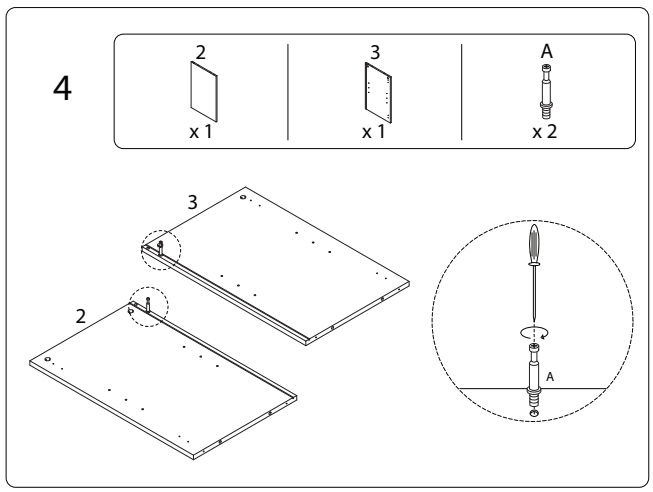
4
2
x 1
3
x 1
A
x 2
3
2
A

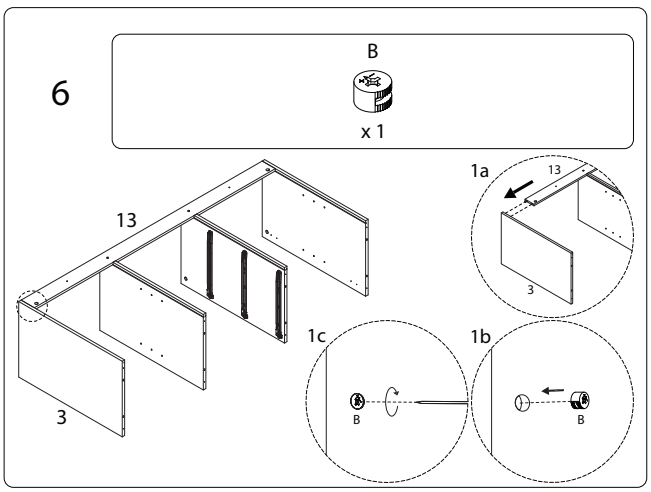
6
B
x 1
13
3
1a
13
3
1c
1b
B
B

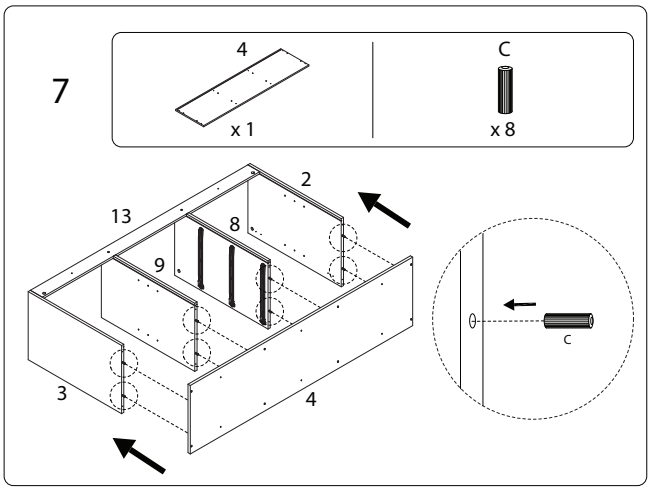
7
4
x 1
C
x 8
13
2
8
9
3
4
C

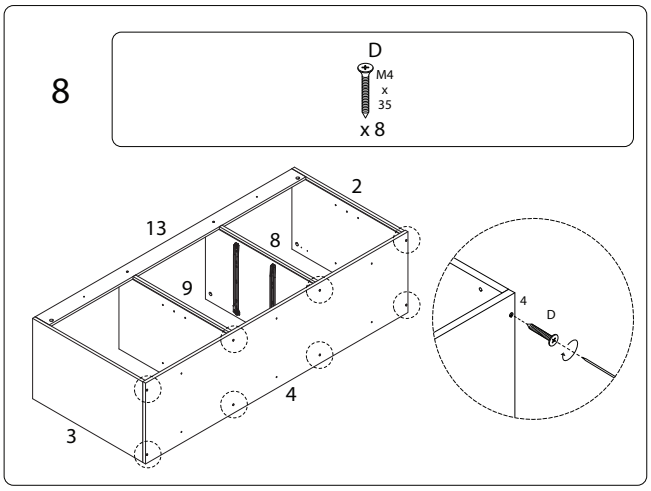
8
D
M4
x
35
x 8
13
2
8
9
4
3
4
D

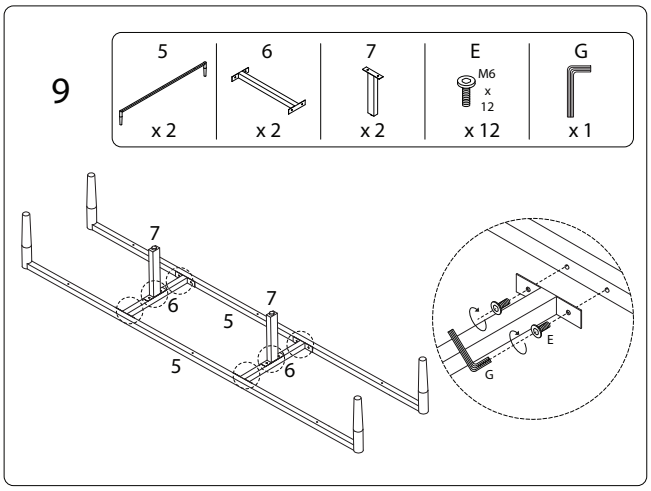
9
5
x 2
6
x 2
7
x 2
E
M6
x
12
x 12
G
x 1
7
6
7
5
5
6
E
G

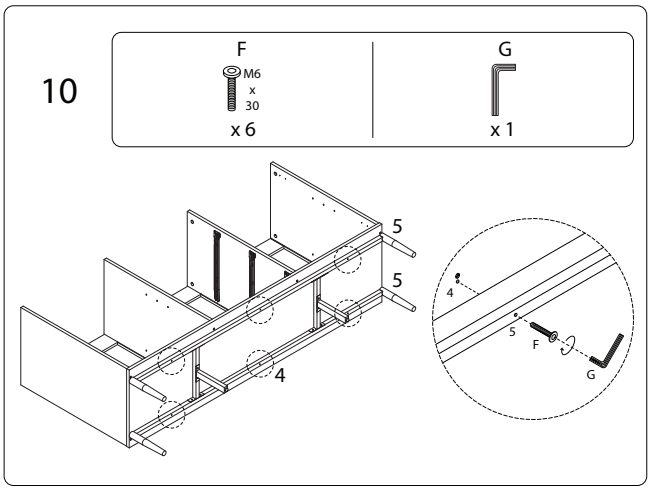
10
F
M6
x
30
x 6
G
x 1
5
5
4
4
5
F
G

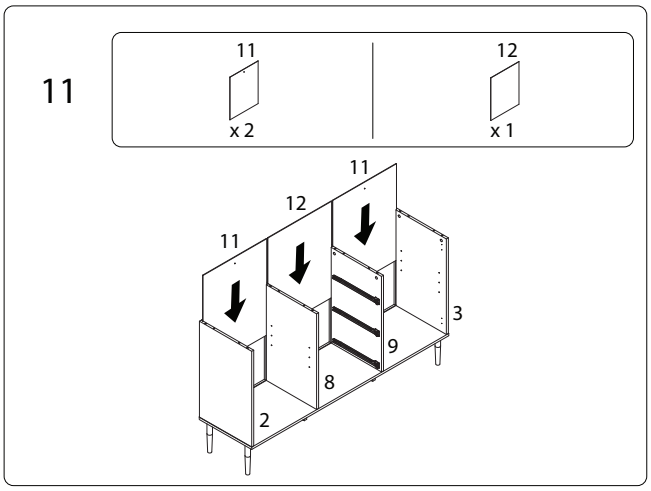
11
11
x 2
12
x 1
11
12
11
3
9
8
2

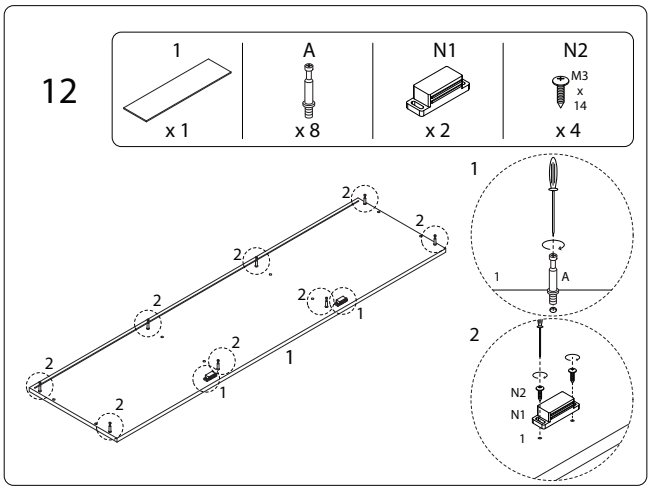
12
1
x 1
A
x 8
N1
x 2
N2
M3
x
14
x 4
2
2
2
2
2
2
2
1
1
1
1
A
2
N2
N1
1

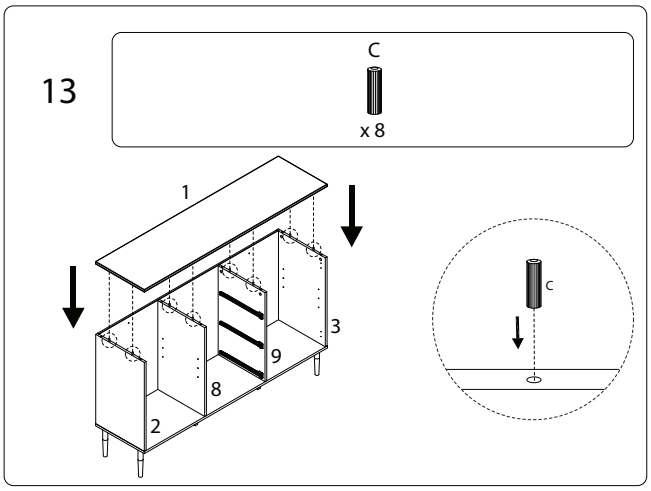
13
C
x 8
1
3
9
8
2
C

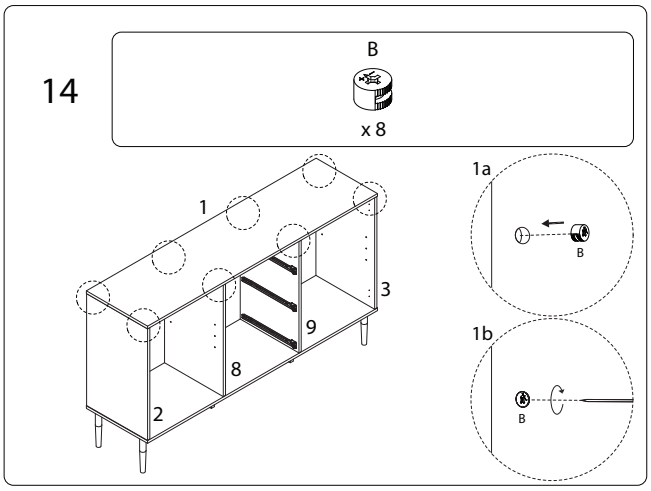
14
B
x 8
1
3
9
8
2
1a
B
1b
B

15

14	15	H1	H2
x 1	x 1	x 2	x 4
J	**K**	**O1**	**O2**
x 8	x 4	x 2	x 2

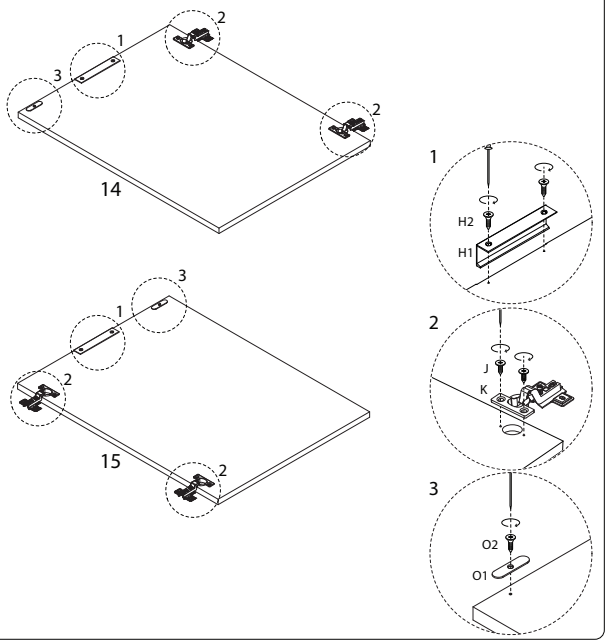

2619/LEDUC/200126/

16

I1	I2
x 12	x 12

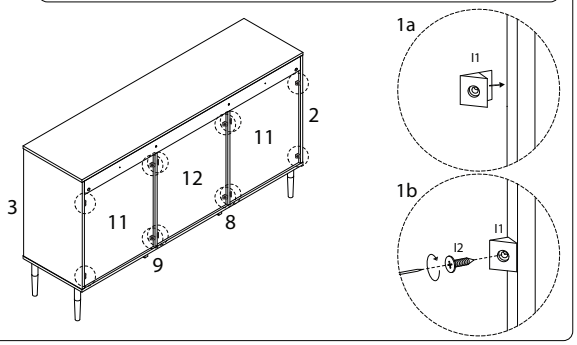

17

J
x 8

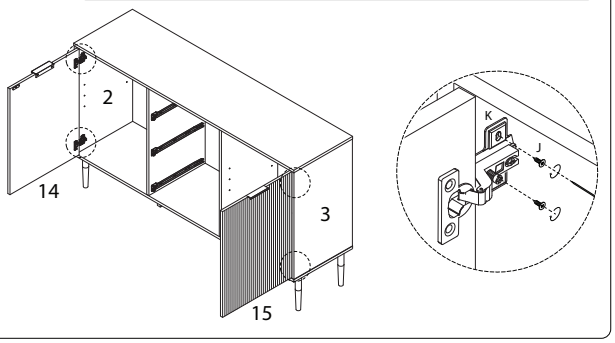

2619/LEDUC/200126/

18

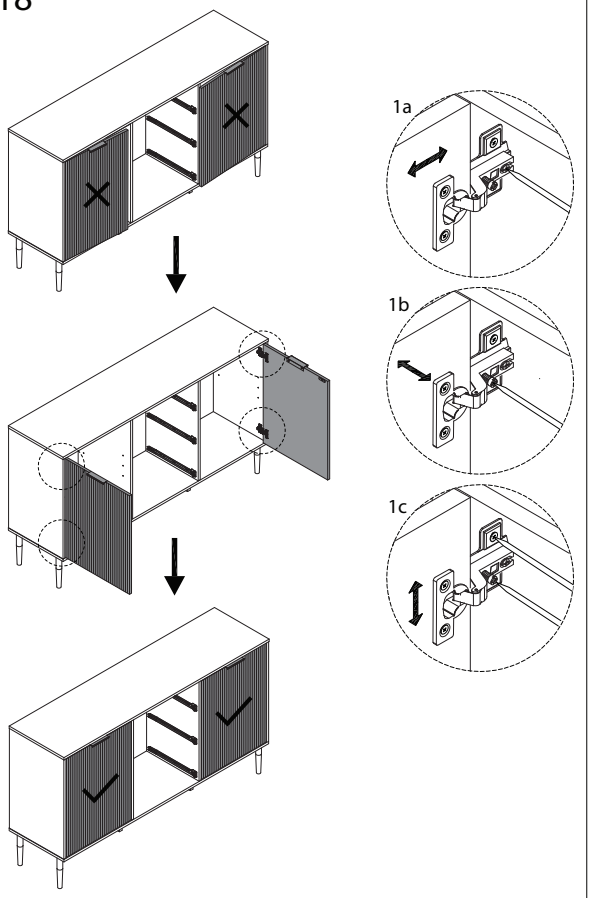

2619/LEDUC/200126/

19

M1	M2
x 2	x 2

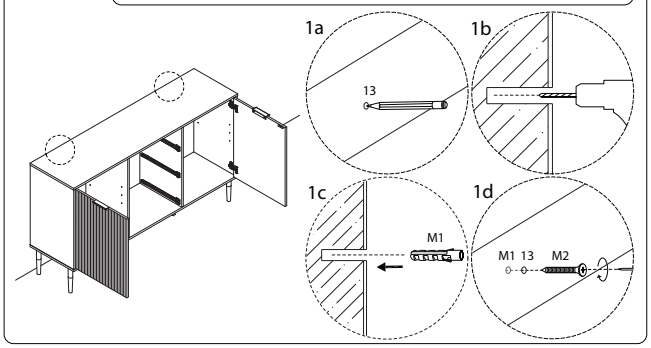

20

L
x 8

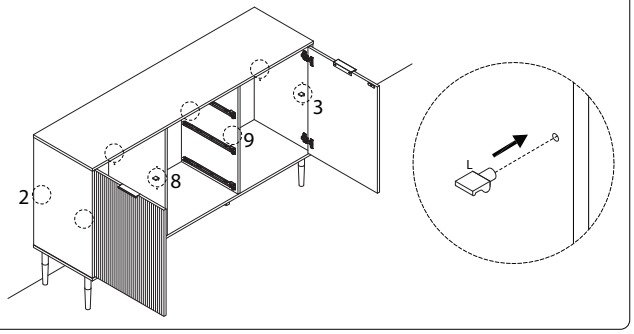

2619/LEDUC/200126/

21

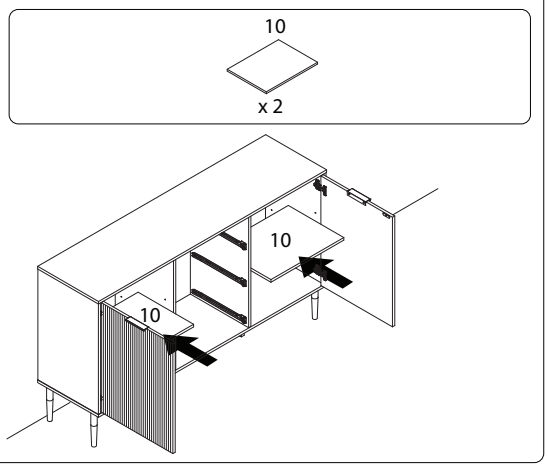

23 x 3

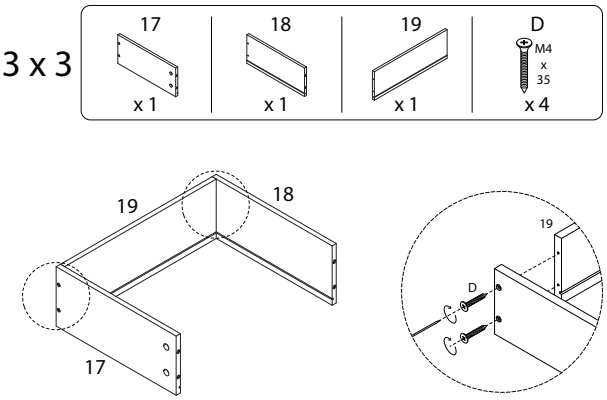

22 x 3

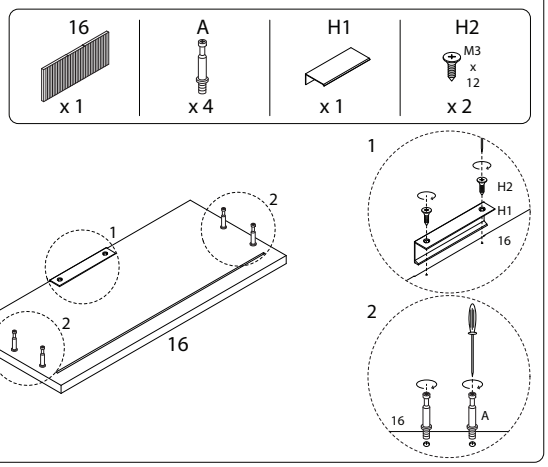

24 x 3

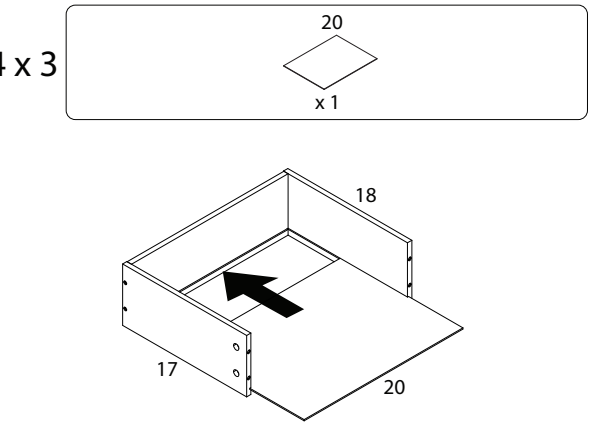

2619/LEDUC/200126/

2619/LEDUC/200126/

25 x 3

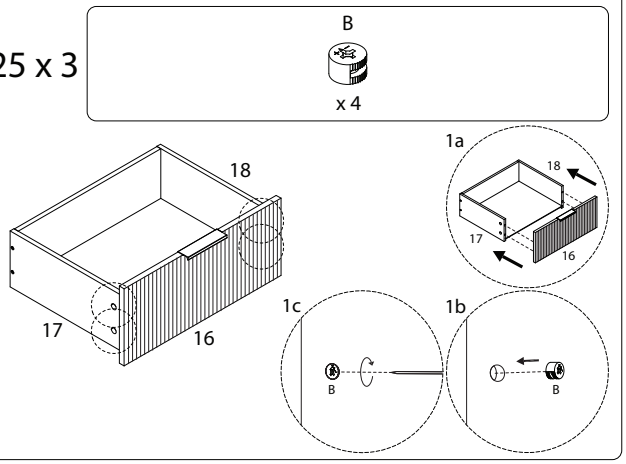

26 x 3

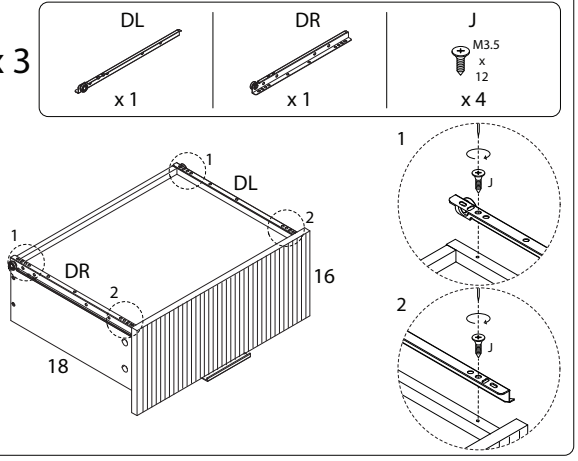

27

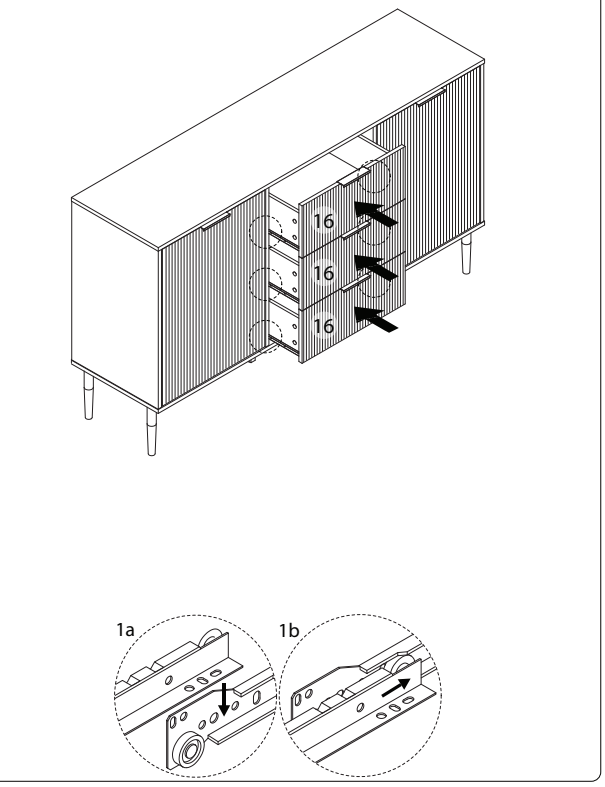

2619/LEDUC/200126/

2619/LEDUC/200126/