HAILLICOURT

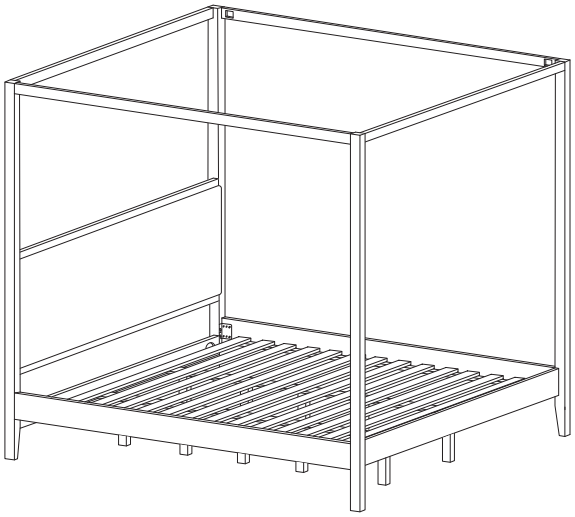

1/9

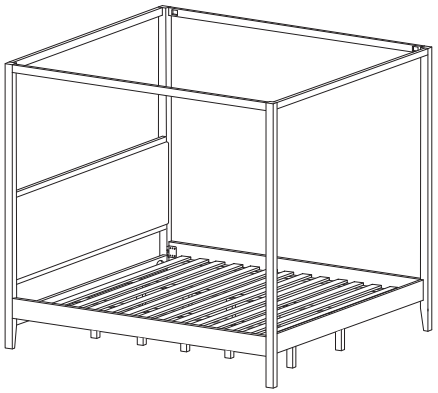

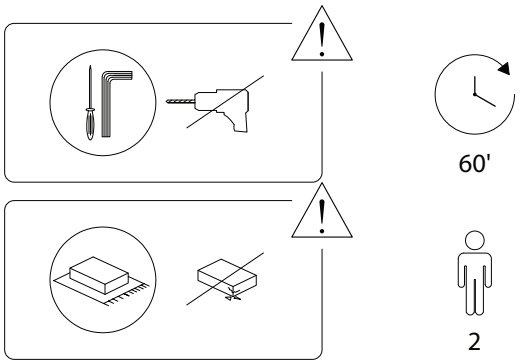

2/9

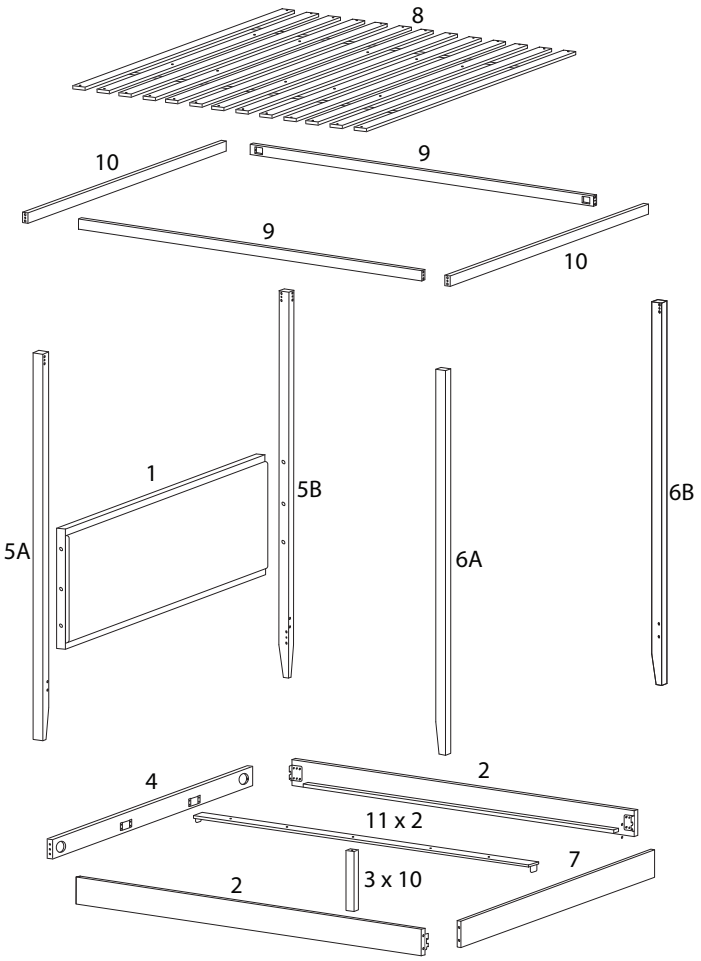

3/9

1 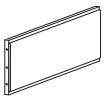 x 1	2  x 2	3  x 10	4  x 1
5A x 1	5B x 1	6A x 1	6B x 1
7  x 1	8 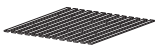 x 1	9 x 2	10  x 2
11  x 2	A  x 20	B  M6 x 60 x 10	C  M4 x 25 x 26	D  M8 x 16 x 8
E  M4 x 1	F  M5 x 1	G  M6 x 45 x 20	H  x 20	I  x 10

4/9

2550/HAILLICOURT/150126/

1

4	9	10	H
x 1	x 2	x 2	x 1

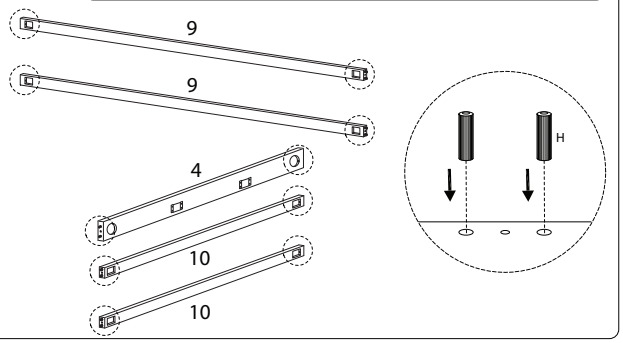

2

1	5A	5B	A	E	G
x 1	x 1	x 1	x 10	x 1	x 10

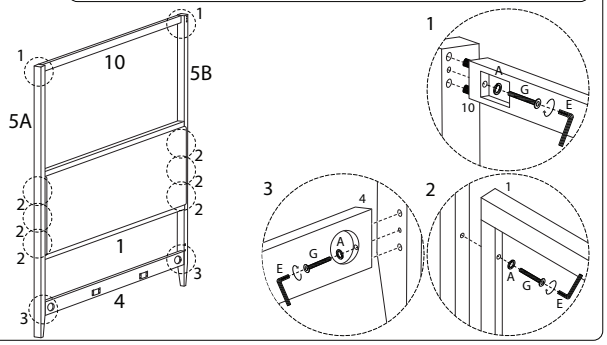

3

6A	6B	7	A	E	G
x 1	x 1	x 1	x 6	x 1	x 6

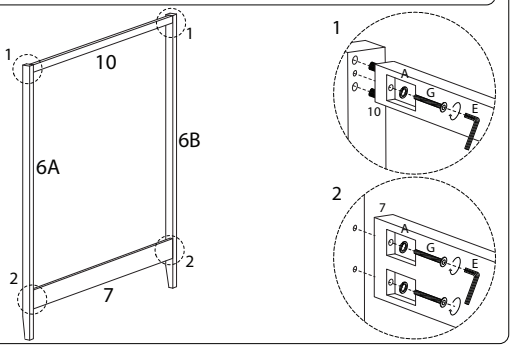

4

2	D	F
x 2	x 8	x 1

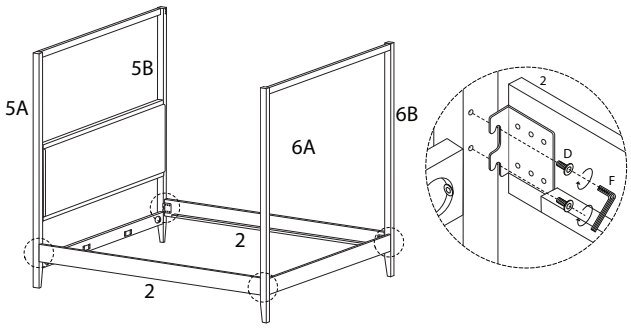

5

A	E	G
x 4	x 1	x 4

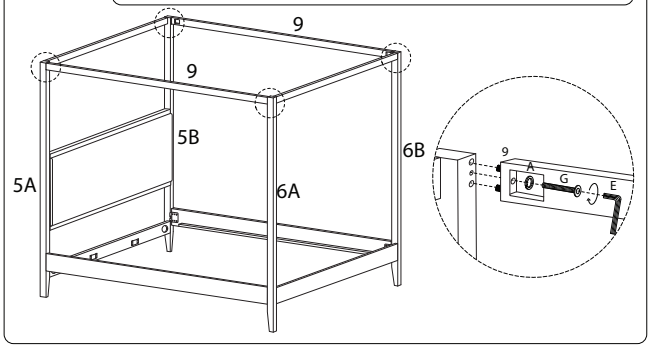

7 x 10

3	I
x 1	x 1

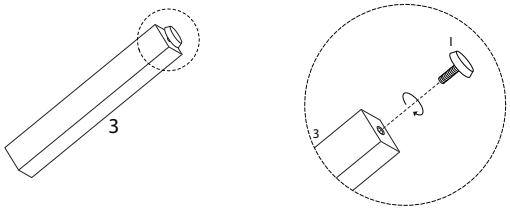

6

11
x 2

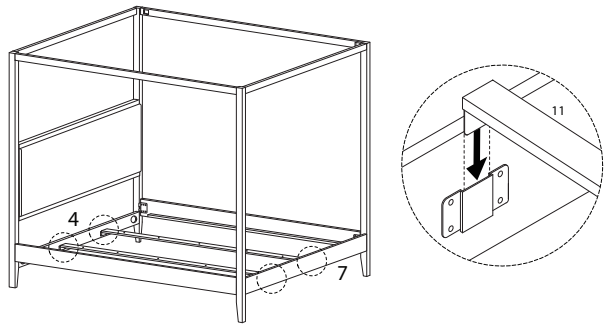

8

8	C
x 1	x 26

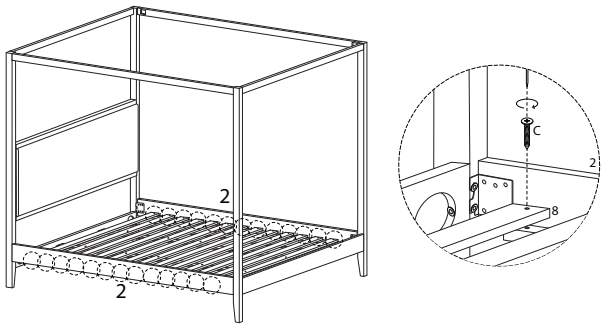

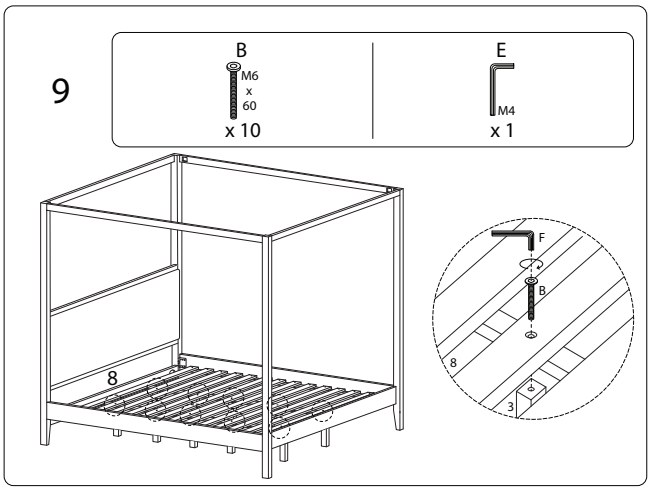

2550/HAILLICOURT/150126/