COSMOS

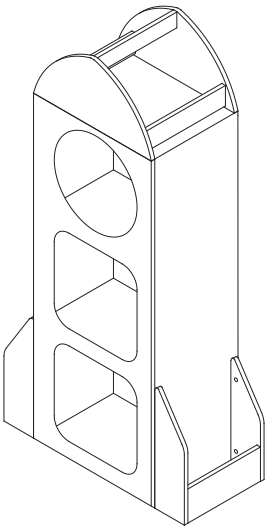

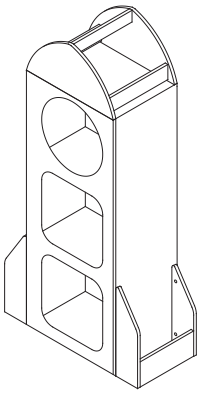

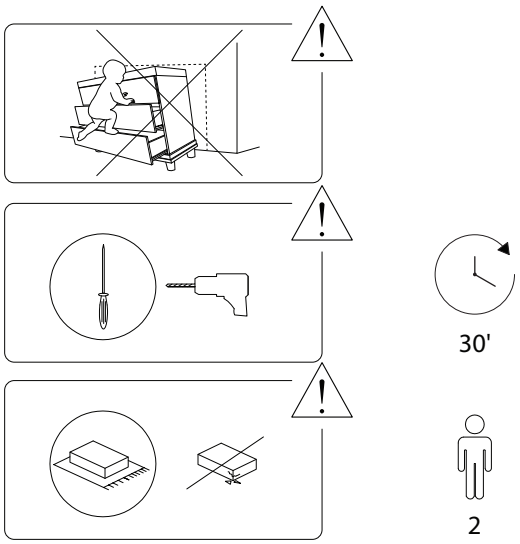

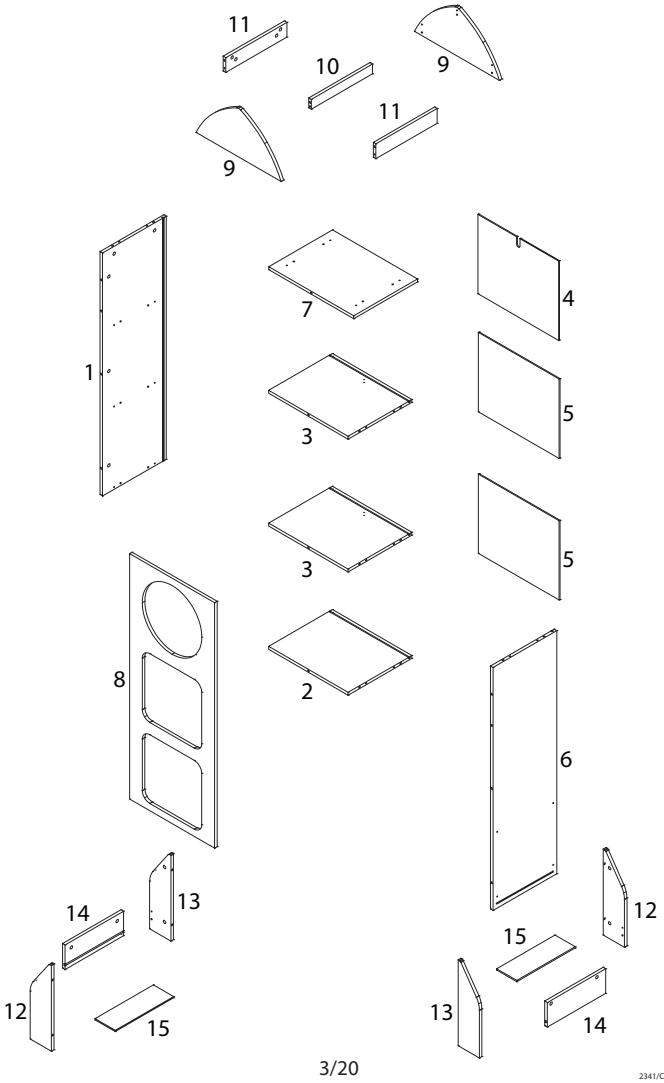

1	2	3	4	5
x 1	x 1	x 2	x 1	x 2
6	7	8	9	10
x 1	x 1	x 1	x 2	x 1
11	12	13	14	15
x 2	x 2	x 2	x 2	x 2
A	B	C	D	E
x 48	x 48	x 34	x 1	M4 x 12 x 1
F	G	H	I	J
x 1	M4 x 35 x 1	x 18	M3 x 14 x 12	x 12

1

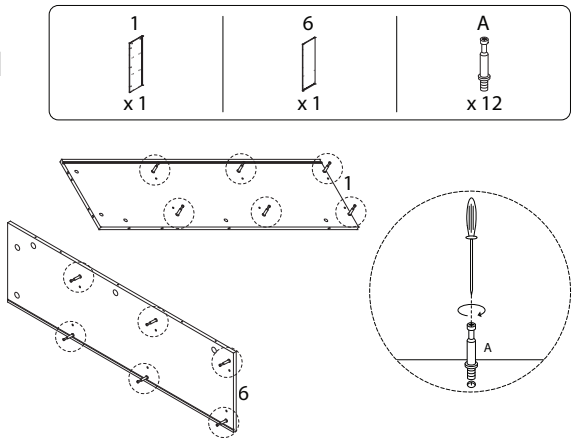
1
x 1
6
x 1
A
x 12
1
6
A

2

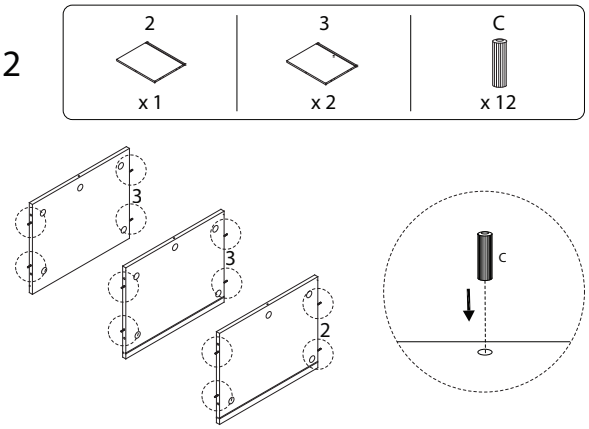
2
x 1
3
x 2
C
x 12
3
3
2
C

3

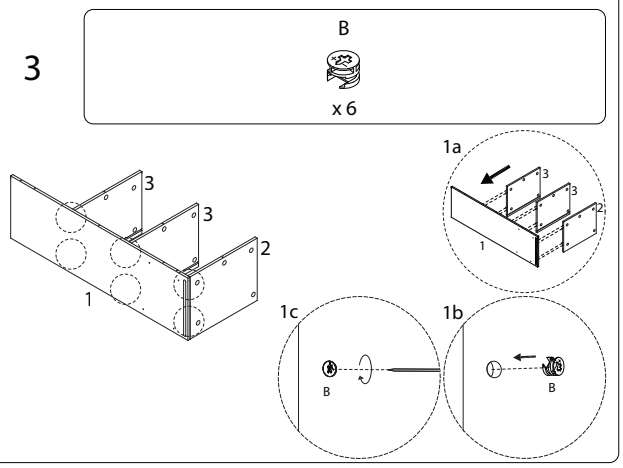
B
x 6
1a
3
3
2
1
3
3
2
1
1c
1b
B
B

4

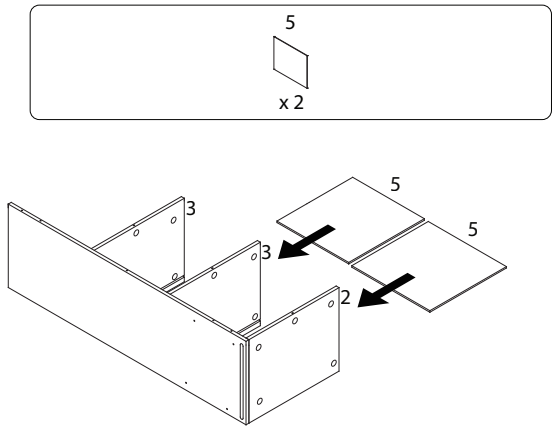
5
x 2
3
5
5
3
2

5

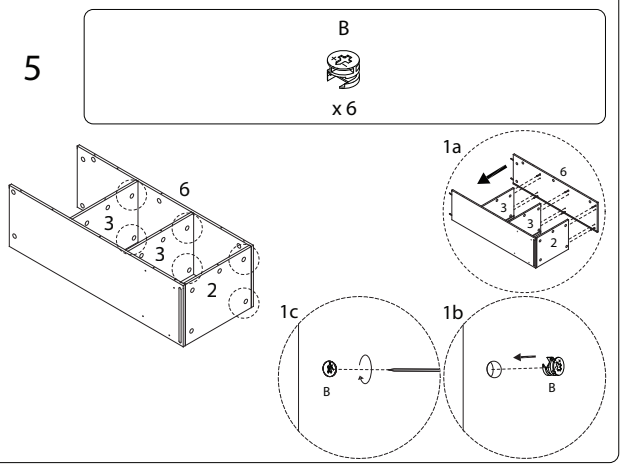
B
x 6
6
3
3
2
1a
6
3
3
2
1c
1b
B
B

6

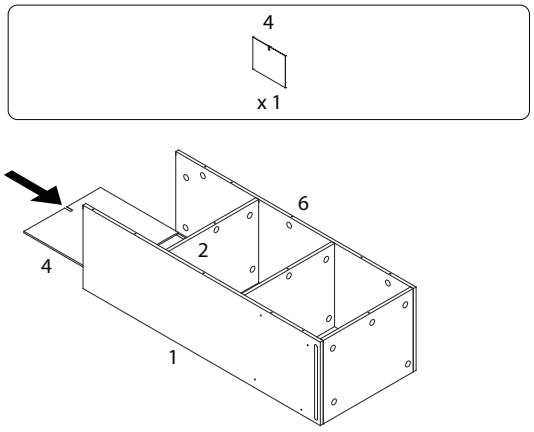
4
x 1
6
2
4
1

7

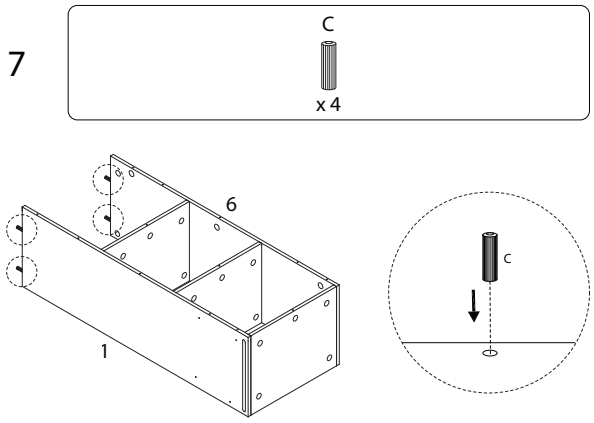
C
x 4
6
1
C

8

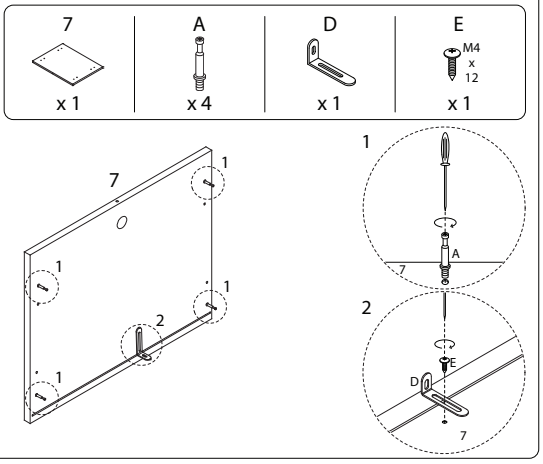
7
x 1
A
x 4
D
x 1
E
M4
x
12
x 1
7
1
1
1
2
1
1
A
7
2
E
D
7

9

B

x 4

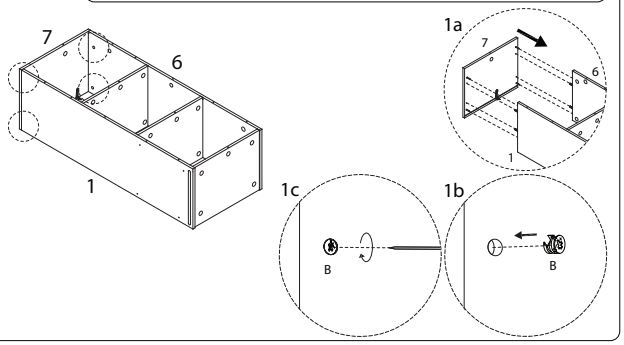

10

8

x 1

A

x 10

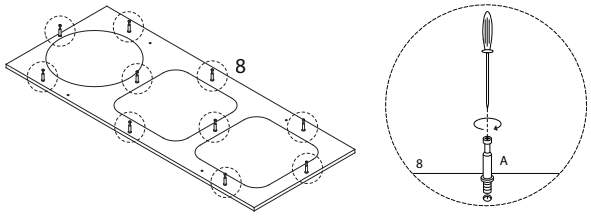

11

C

x 4

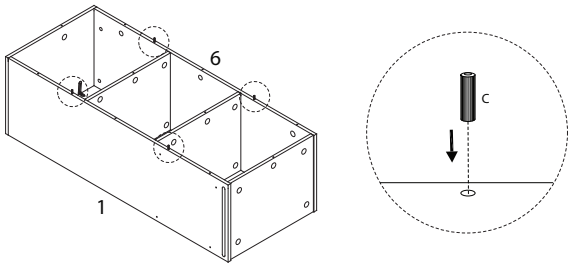

12

B

x 10

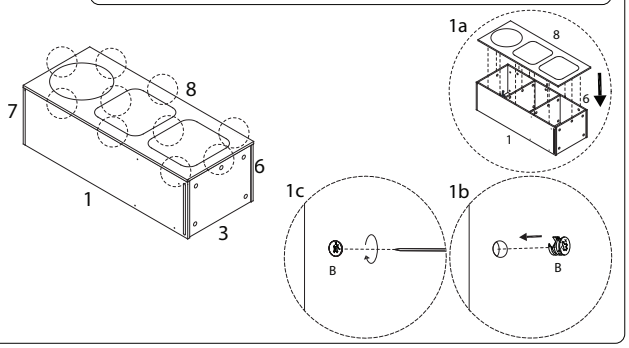

13 x 2

9

x 1

A

x 3

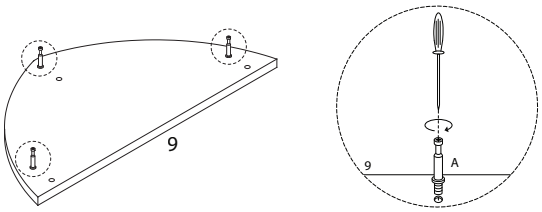

14

10

x 1

11

x 2

C

x 6

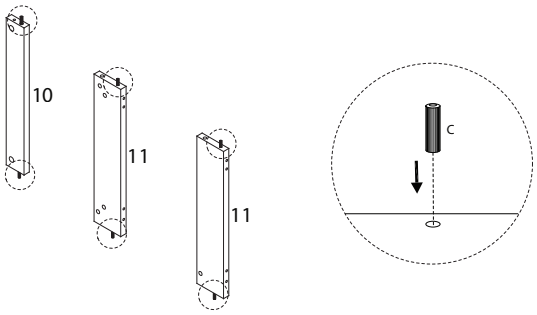

15

B

x 3

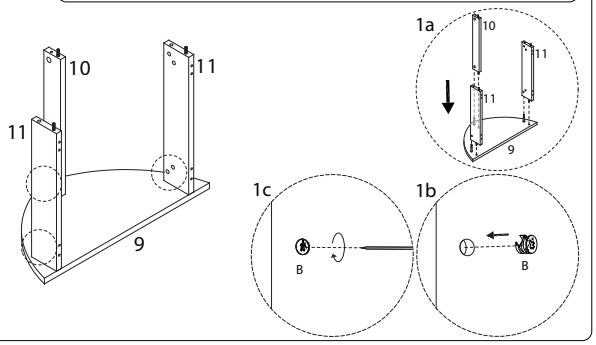

16

H

x 3

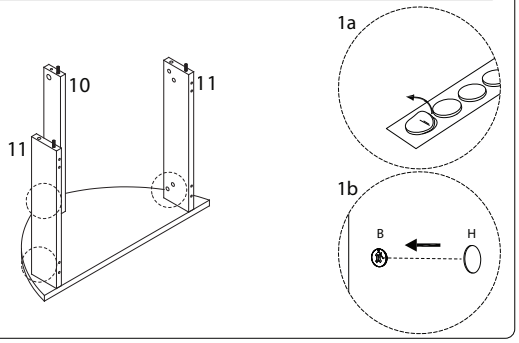

17

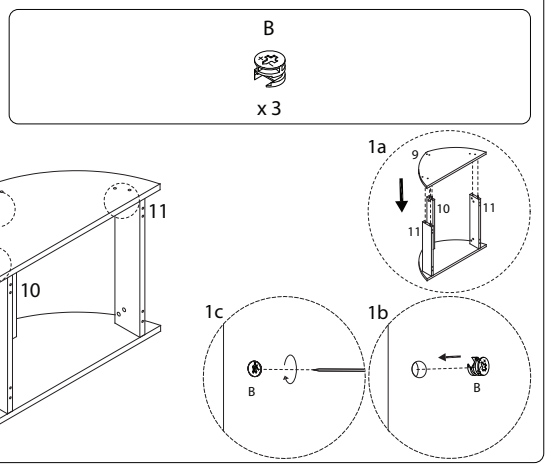

18

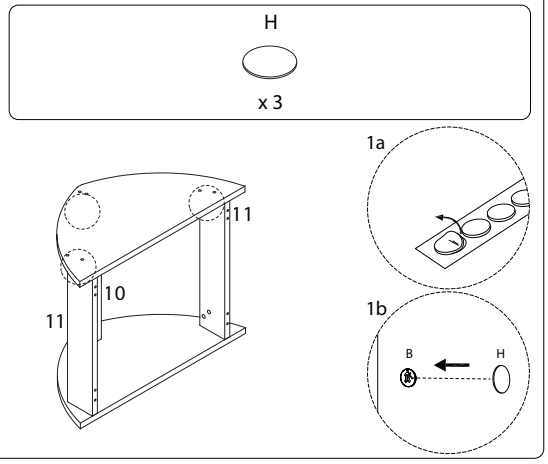

19

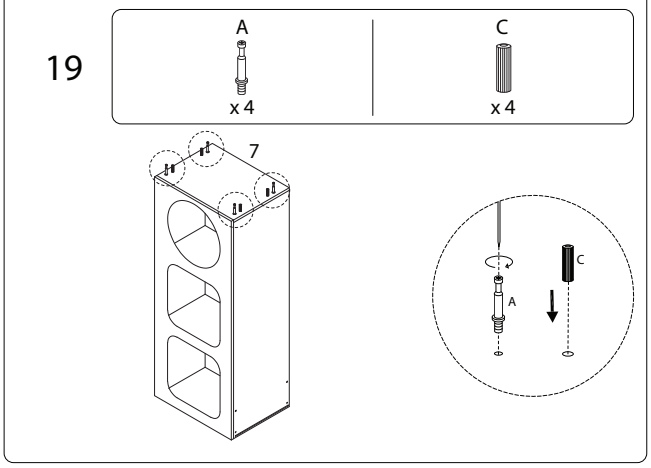

20

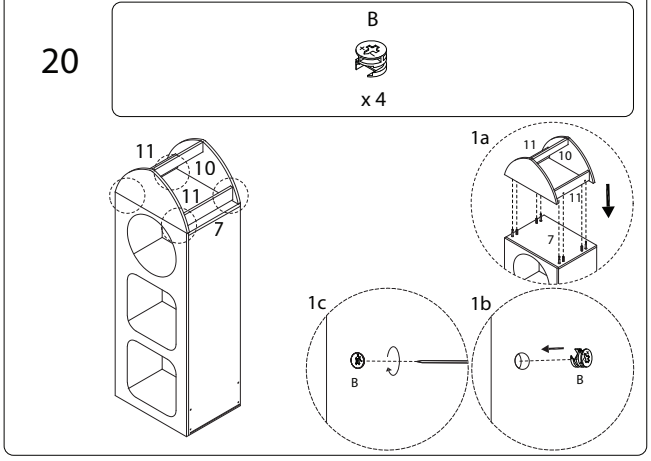

21

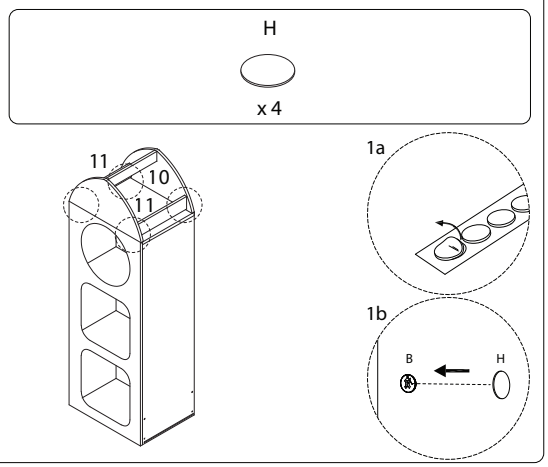

23 x 2

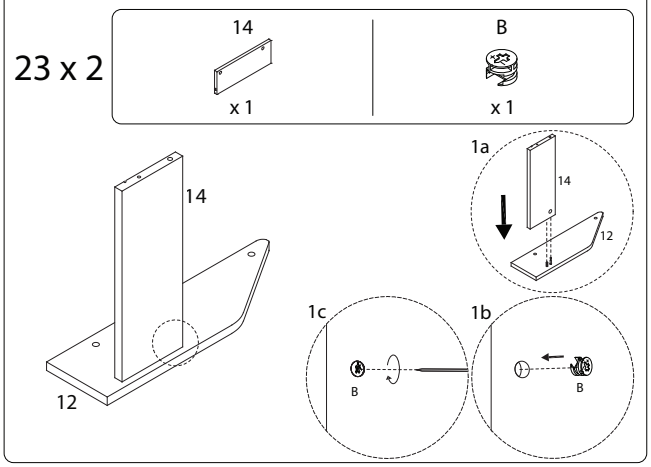

22 x 2

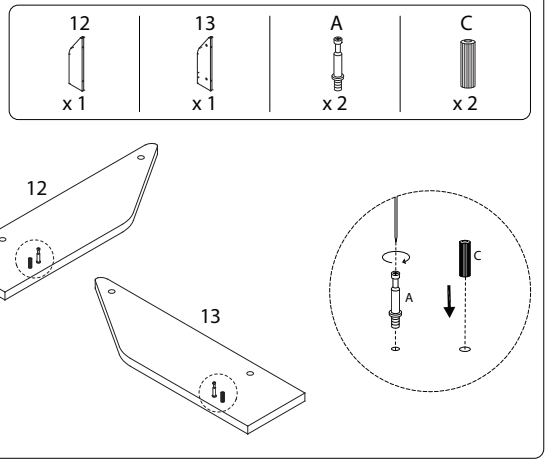

24 x 2

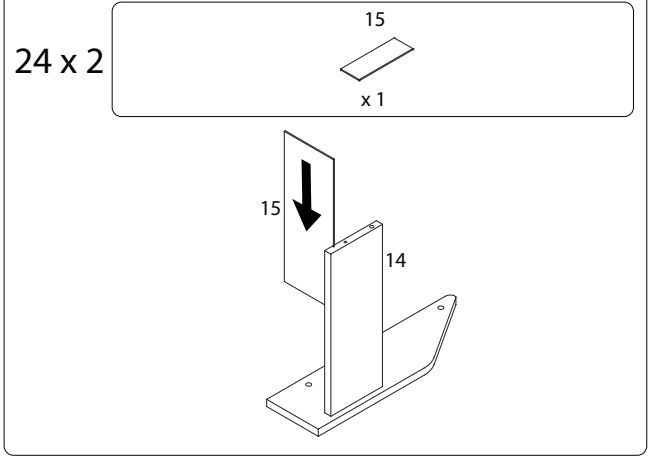

25 x 2

B

x 1

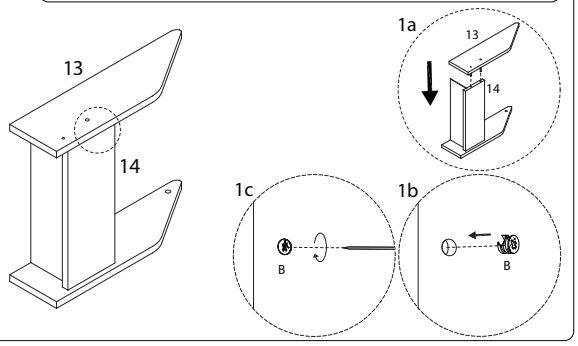

26

A

x 8

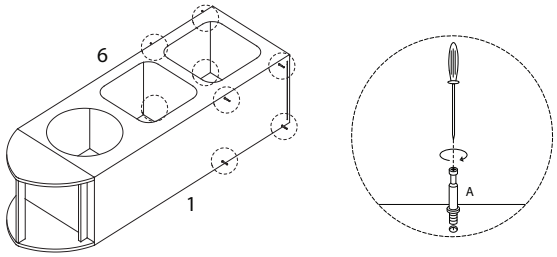

27

B

x 4

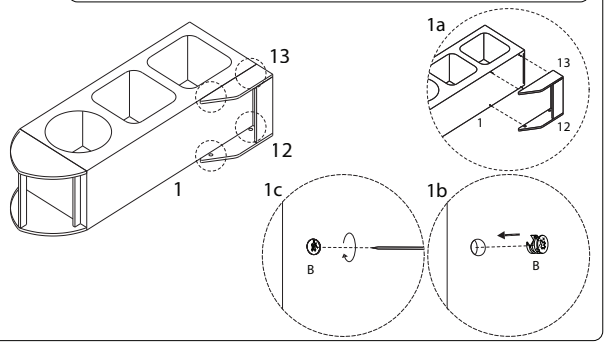

28

B

x 4

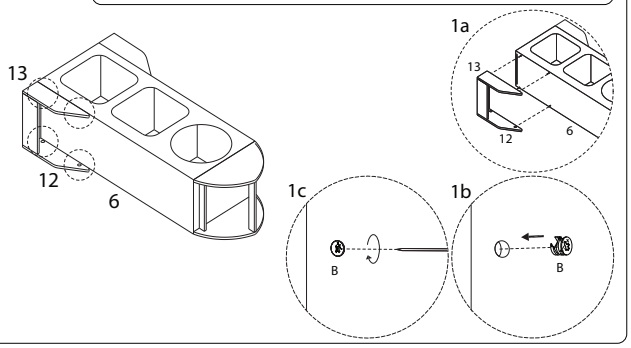

29

H

x 8

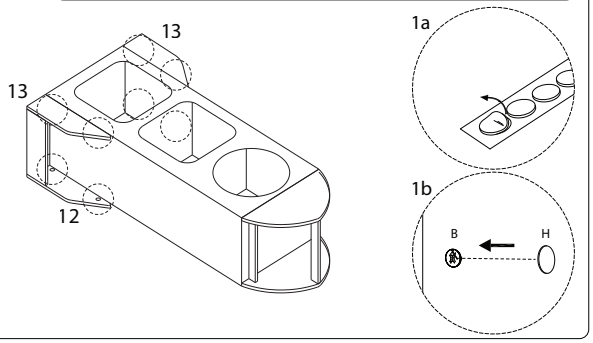

30

I

M3 x 14

x 12

J

x 12

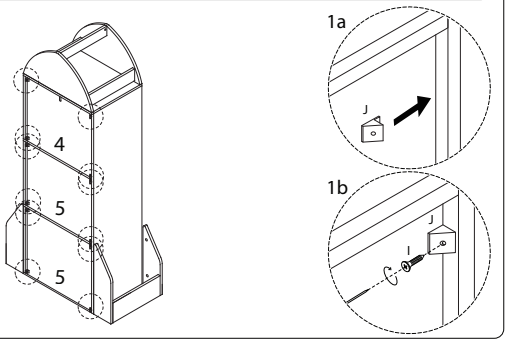

31

F

x 1

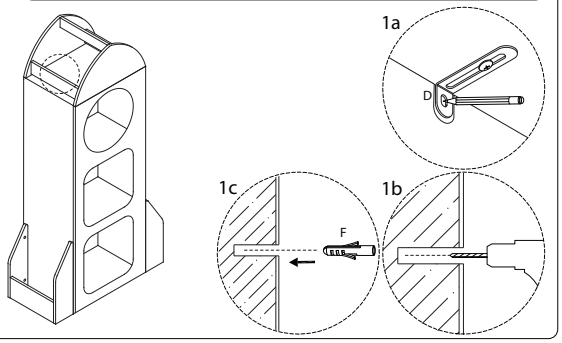

32

G

M4 x 35
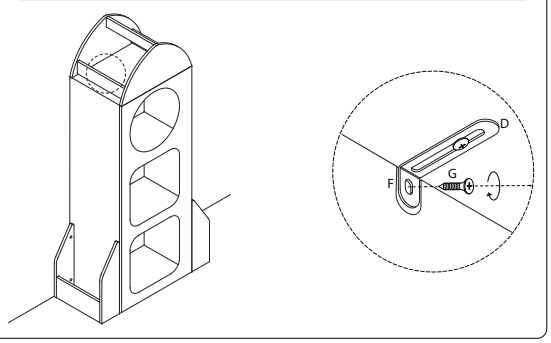
x 1