

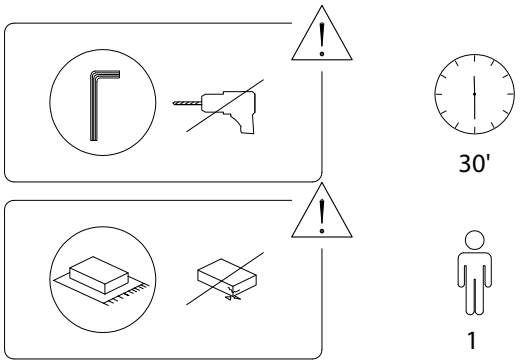
30'
1

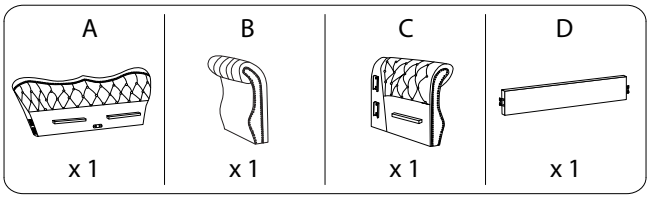
A
x 1
B
x 1
C
x 1
D
x 1

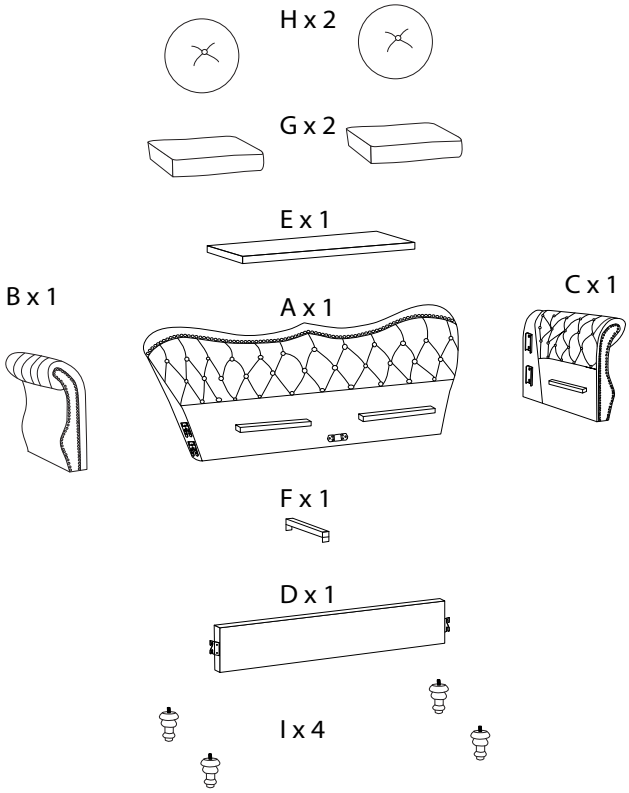
H x 2
G x 2
E x 1
B x 1
A x 1
C x 1
F x 1
D x 1
I x 4

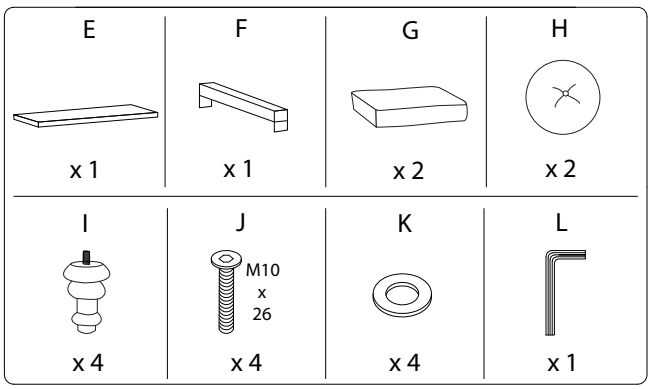
E
x 1
F
x 1
G
x 2
H
x 2
I
x 4
J
M10
x
26
x 4
K
x 4
L
x 1

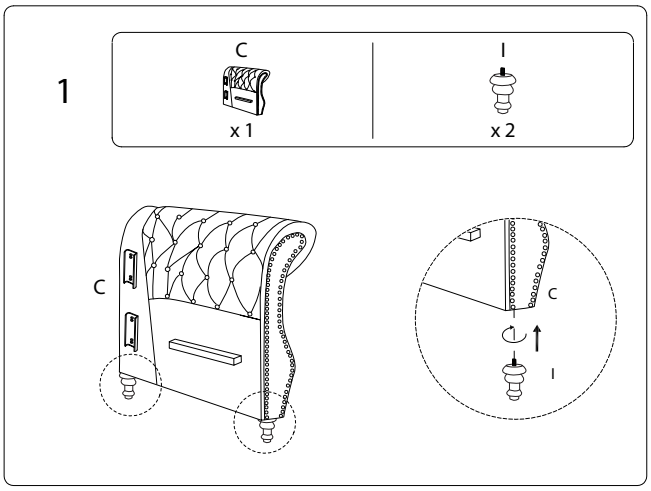
1
C
x 1
I
x 2
C
C
I

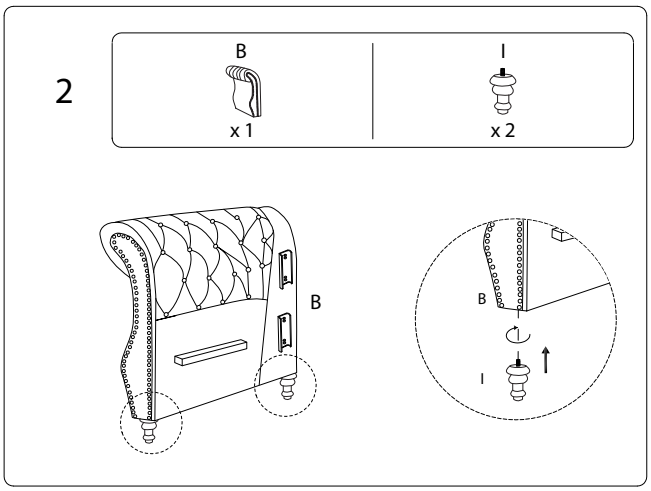
2
B
x 1
I
x 2
B
B
I

3

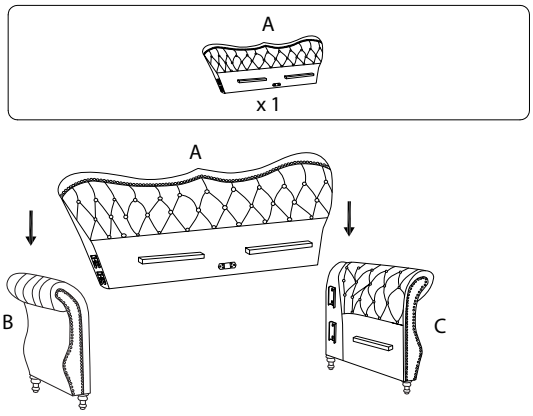

4

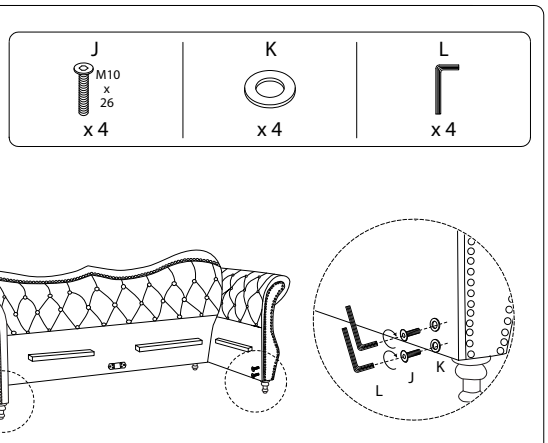

5

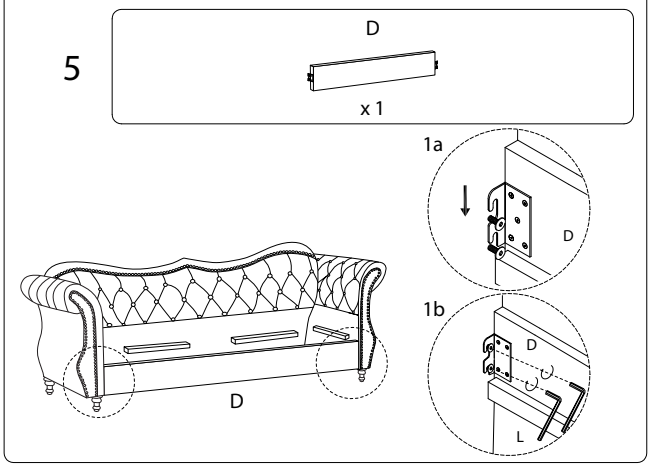

6

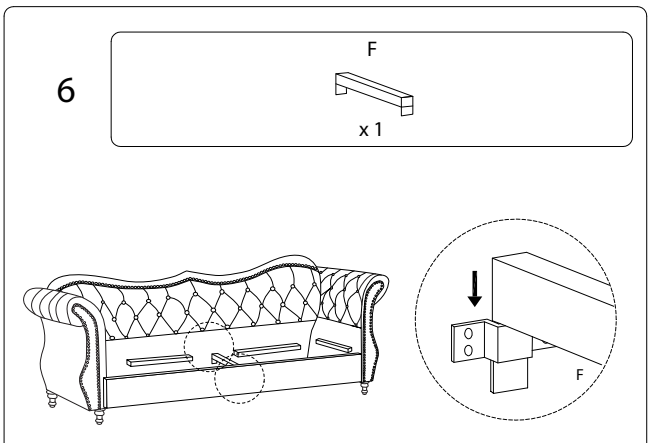

925/SOFA.2.SKIEN/11072019/

925/SOFA.2.SKIEN/11072019/

7

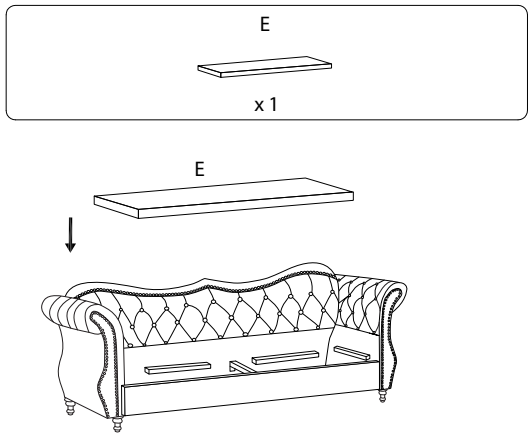

8

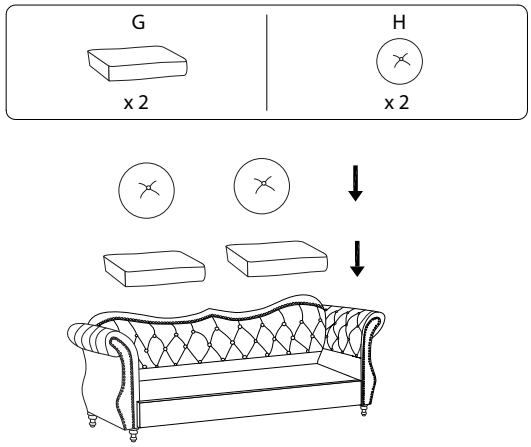

925/SOFA.2.SKIEN/11072019/