MULGA

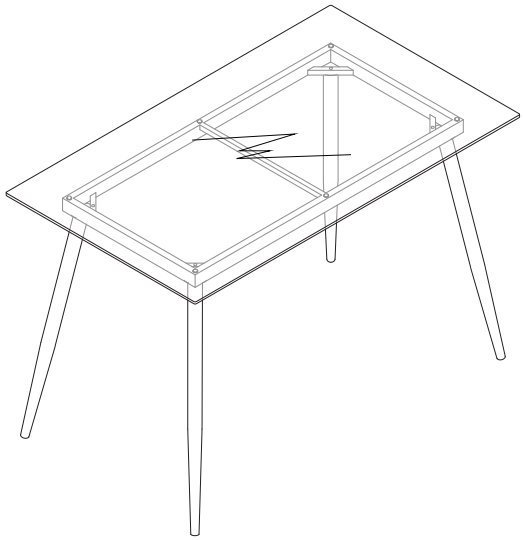

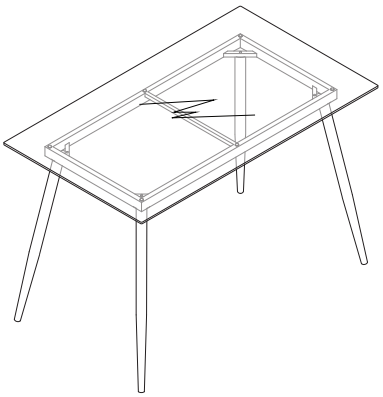

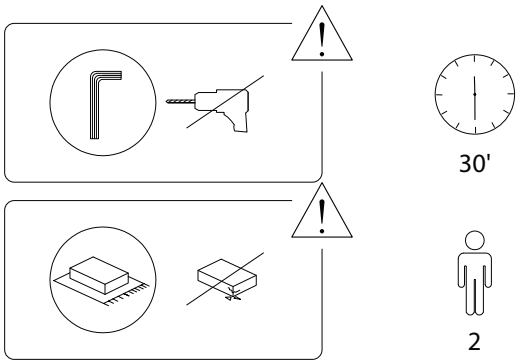

Beliani

Beliani
1813/MULGA/290523/

A	B	C	D
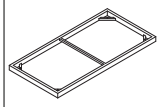		 M6 x 16	 M6 x 25
x 1	x 4	x 8	x 4

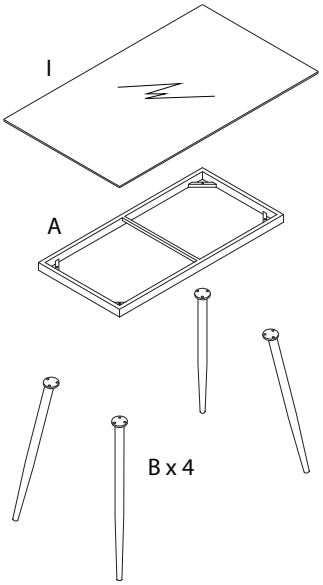

E	F	G	H	I
				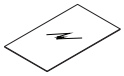
x 4	x 1	x 4	x 6	x 1

Beliani
1813/MULGA/290523/

1

A	B	C	F
		 M6 x 16	
x 1	x 4	x 8	x 1

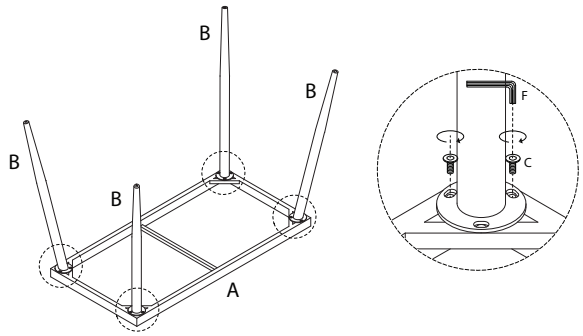

2

D	E	F
 M6 x 25		
x 4	x 4	x 1

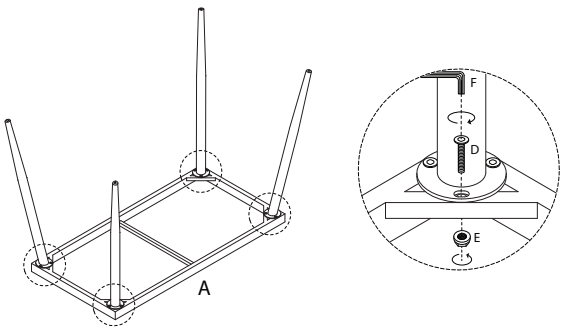

Beliani
1813/MULGA/290523/

3

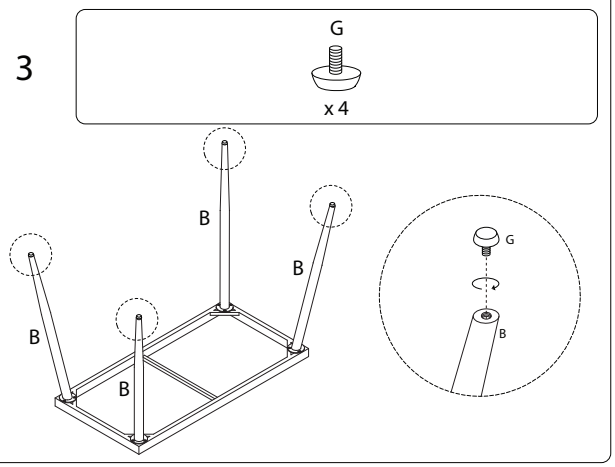

4

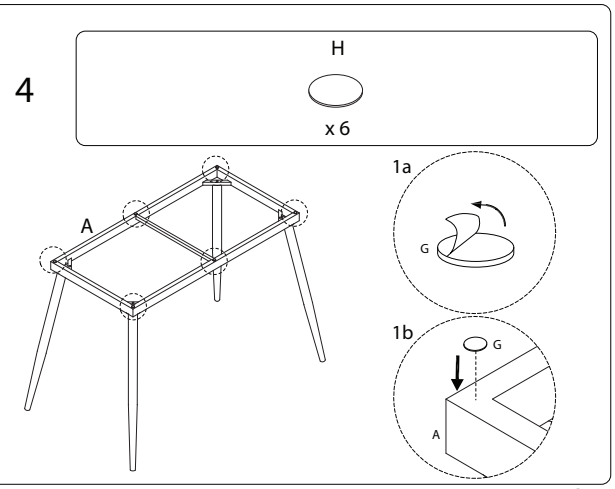

Beliani
1813/MULGA/290523/

5

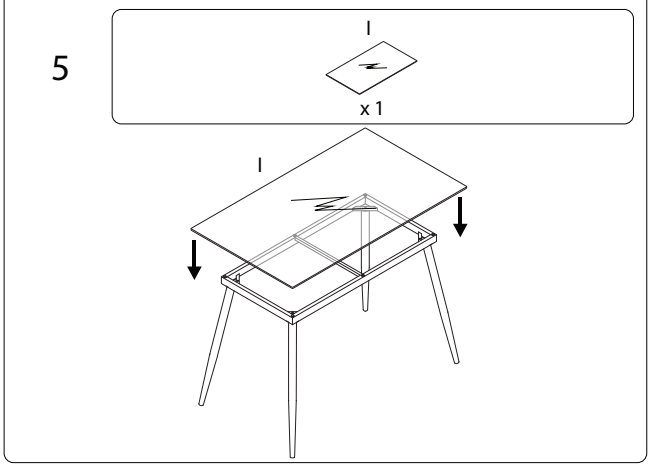

Beliani
1813/MULGA/290523/