ASHMORE

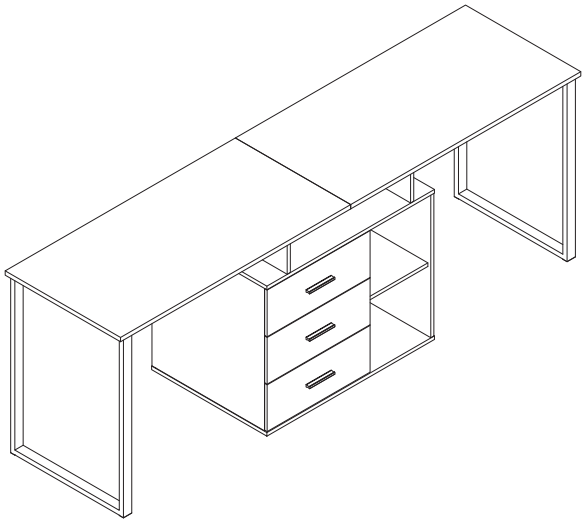

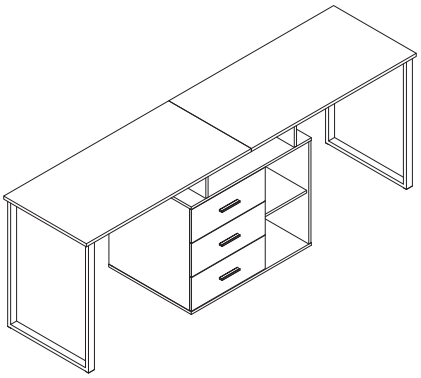

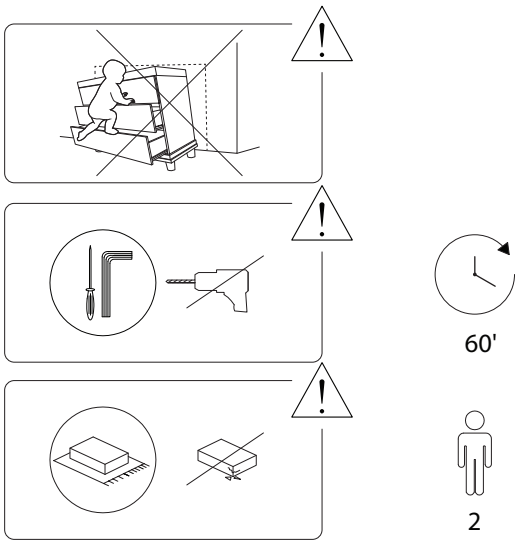
60'
2

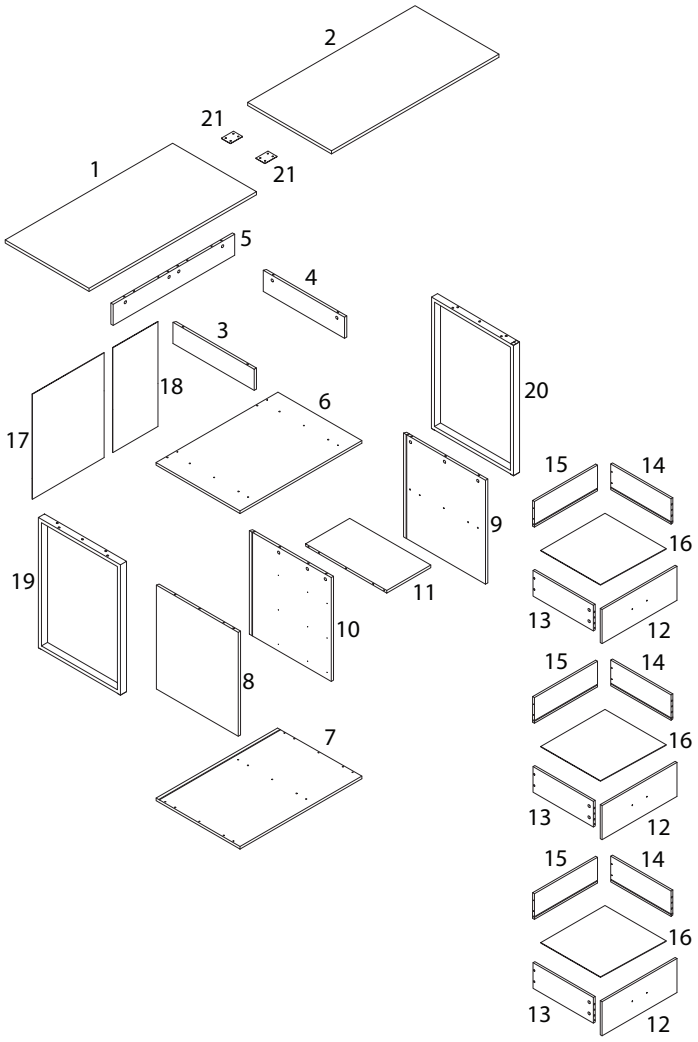
2
21
21
1
5
4
3
18
6
20
17
15
14
9
16
19
11
13
12
10
8
7
15
14
16
13
12
15
14
16
13
12

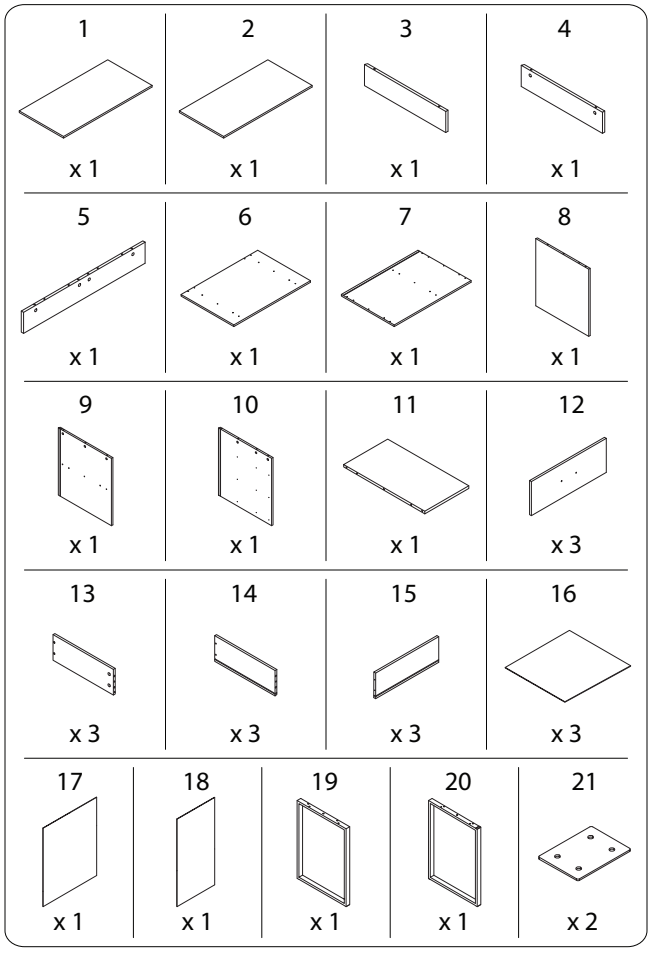
1
x 1
2
x 1
3
x 1
4
x 1
5
x 1
6
x 1
7
x 1
8
x 1
9
x 1
10
x 1
11
x 1
12
x 3
13
x 3
14
x 3
15
x 3
16
x 3
17
x 1
18
x 1
19
x 1
20
x 1
21
x 2

A	B	C
		 M3.5 x 35
x 37	x 37	x 12
D	**E**	**F**
	 M3 x 12	 M4 x 16
x 32	x 44	x 6
G	**H**	**L**
 M5 x 30	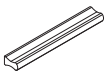	 M6 x 30
x 19	x 3	x 10
M	**N**	**O**
		
x 1	x 6	x 19
CL	**CR**	**DL**	**DR**
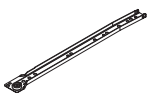	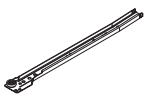	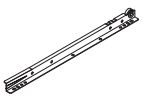	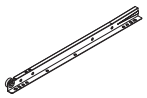
x 3	x 3	x 3	x 3

A

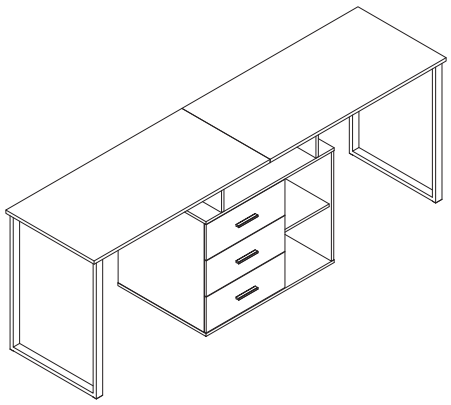

B

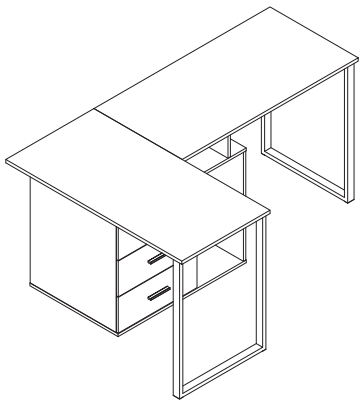

1A

1	2	21	E
			 M3 x 12
x 1	x 1	x 2	x 8

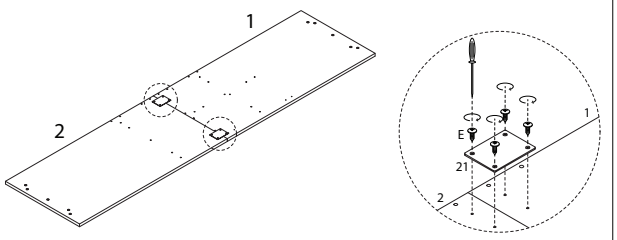

3A

B

x 10

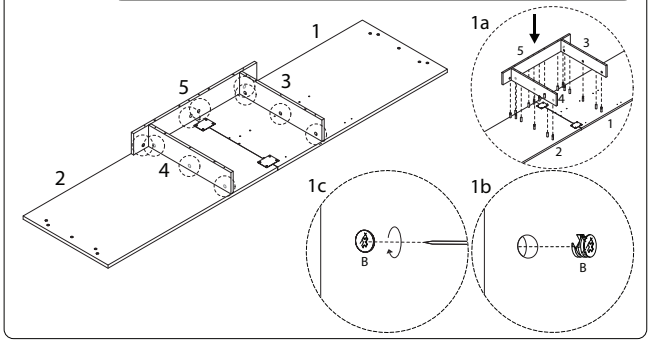

2A

6	A	D
		
x 1	x 19	x 14

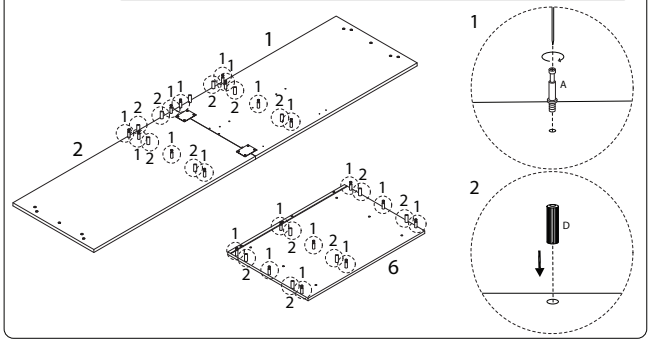

4A

O

x 10

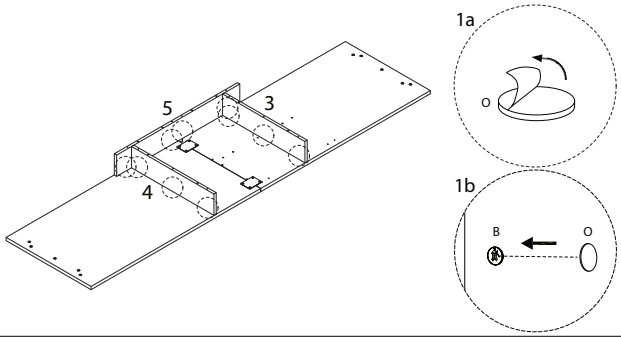

5A

D
x 8

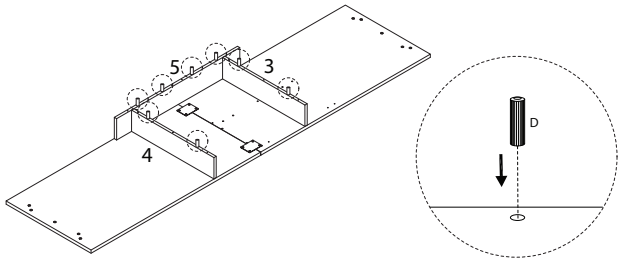

6A

G
M5 x 30
x 10

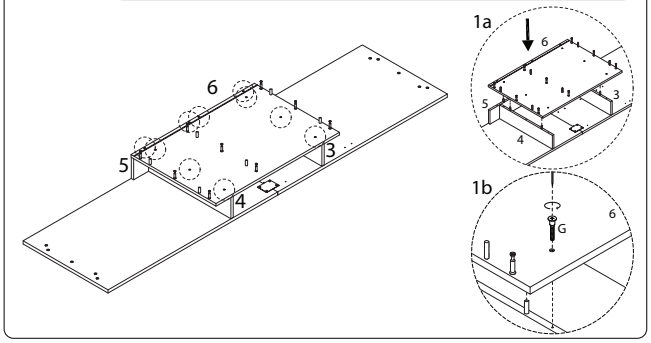

7A

8	10	E	CL	CR
x 1	x 1	M3 x 12 x 18	x 3	x 3

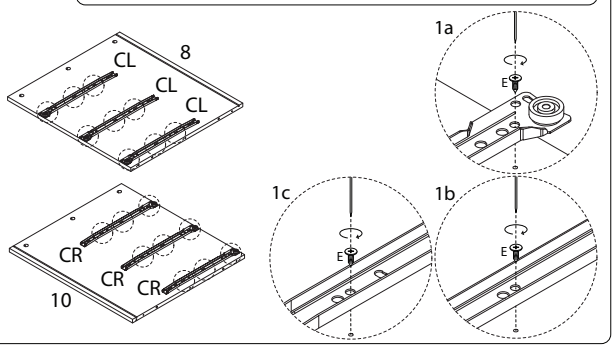

8A

A
x 6

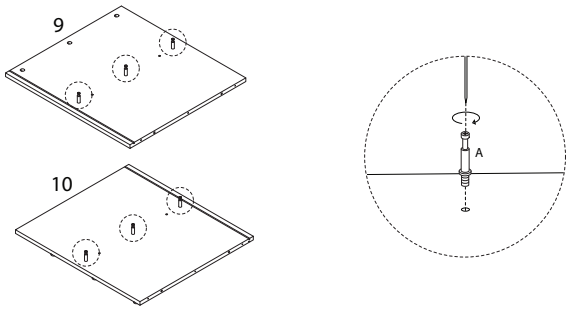

9A

11	D
x 1	x 4

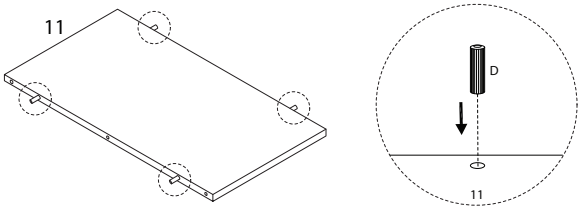

10A

B
x 6

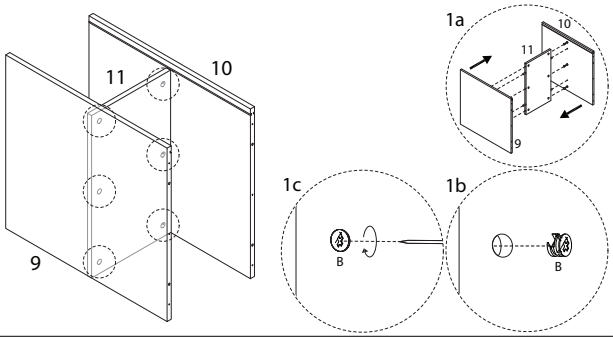

11A

B
x 9

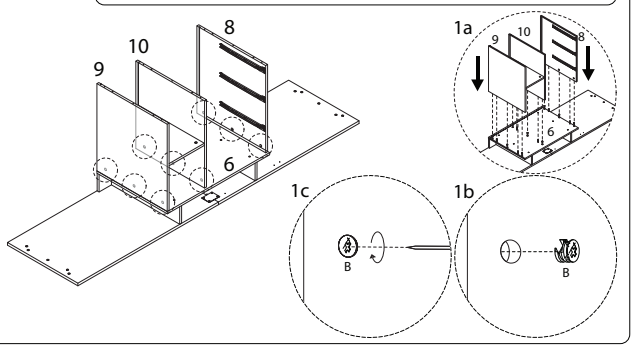

12A

O
x 9

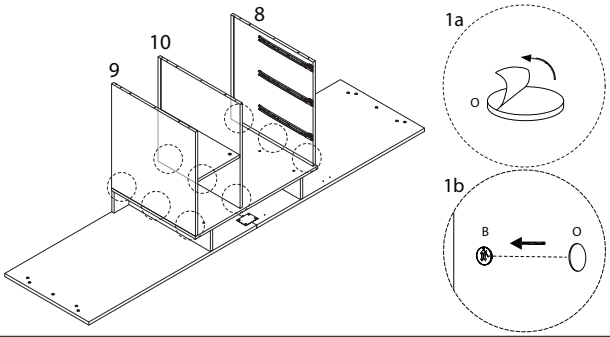

13A

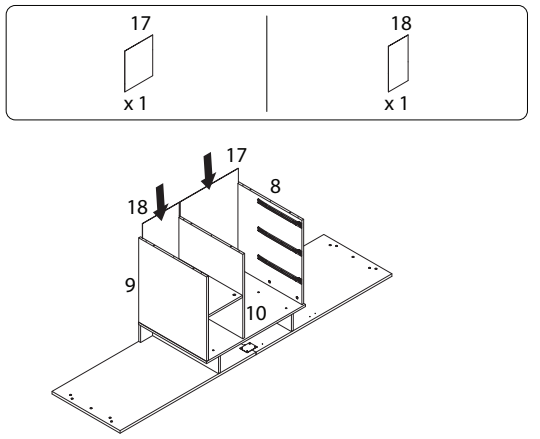

14A

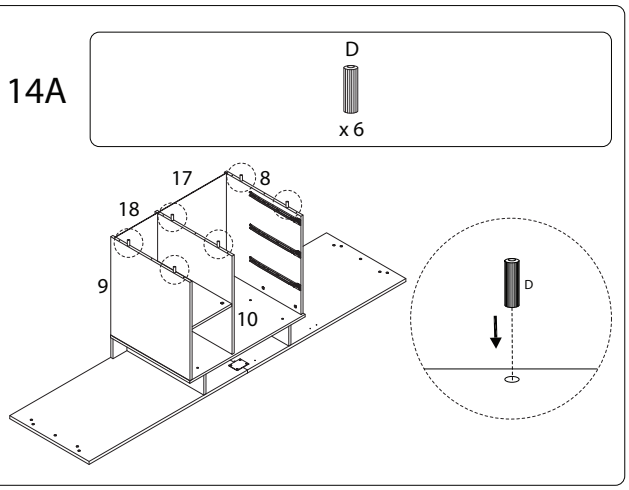

15A

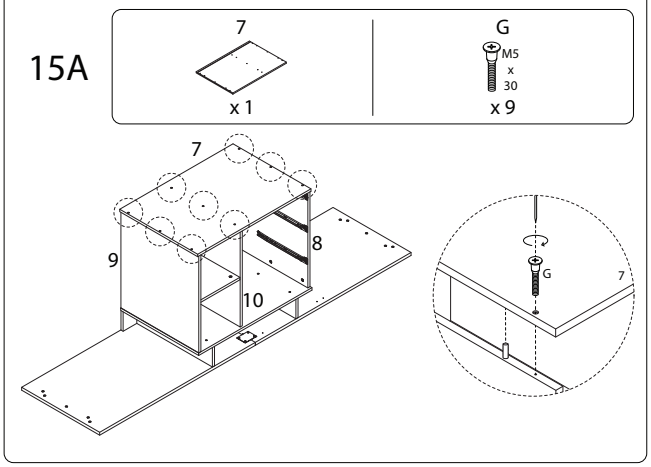

16A

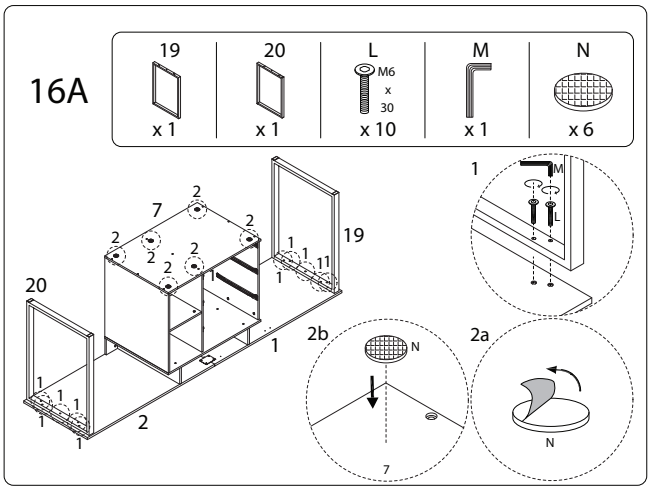

1B

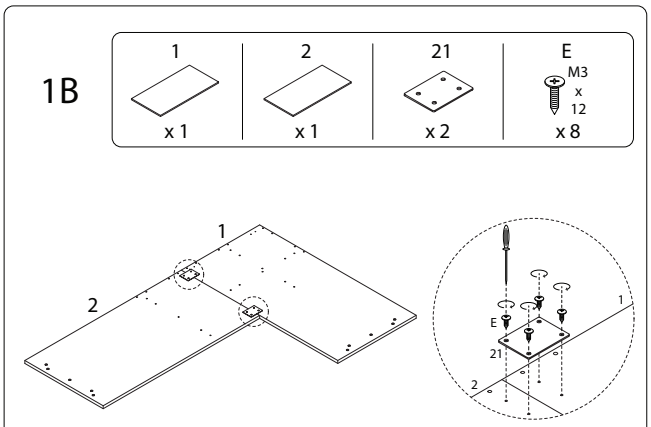

3B

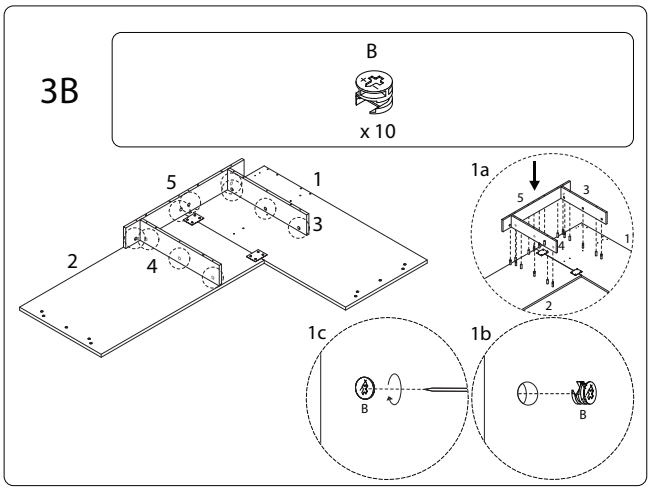

2B

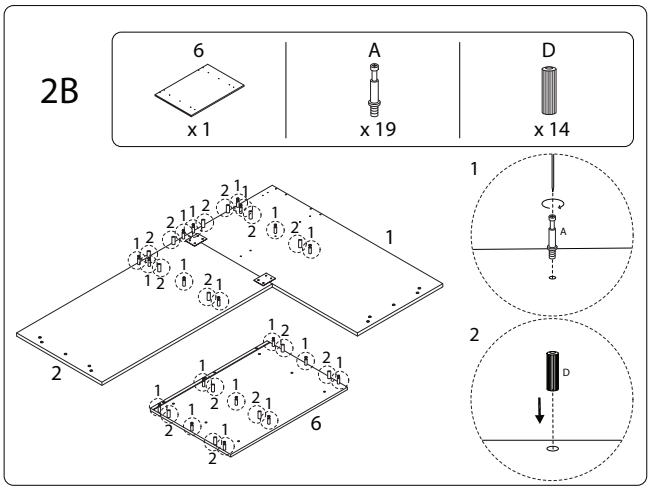

4B

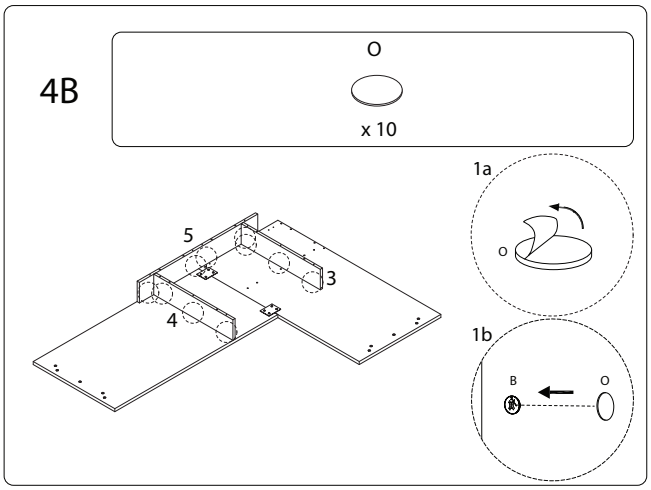

5B

D
x 8

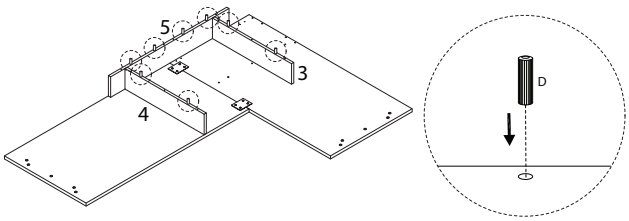

6B

G
M5 x 30
x 10

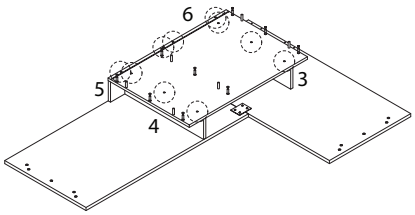

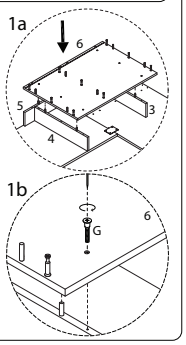

7B

8	10	E	CL	CR
x 1	x 1	M3 x 12 x 18	x 3	x 3

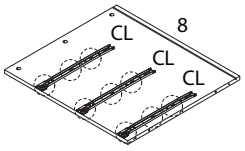

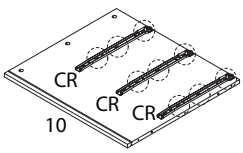

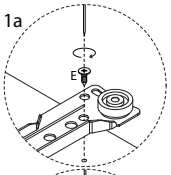

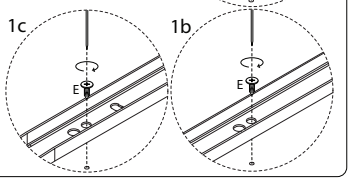

8B

A
x 6

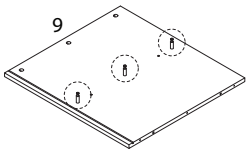

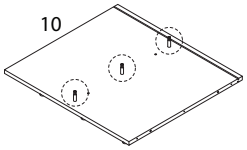

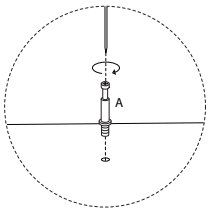

9B

11	D
x 1	x 4

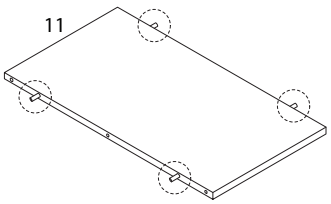

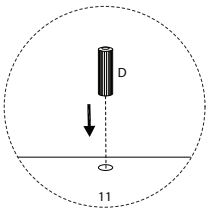

11B

B
x 9

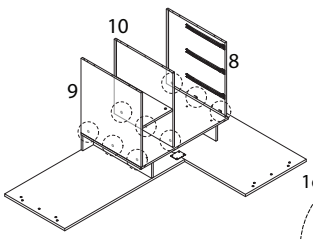

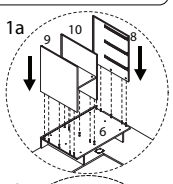

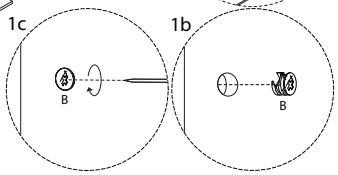

10B

B
x 6

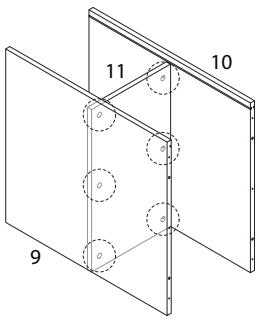

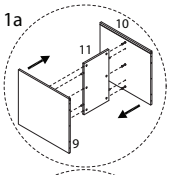

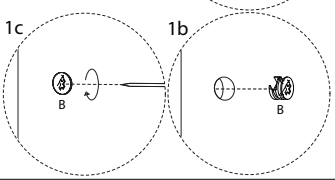

12B

O
x 9

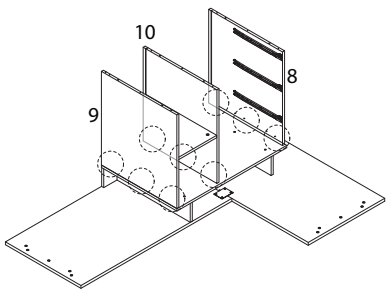

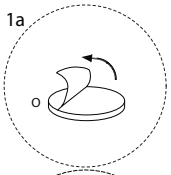

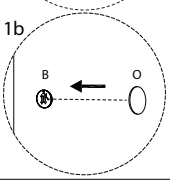

13B

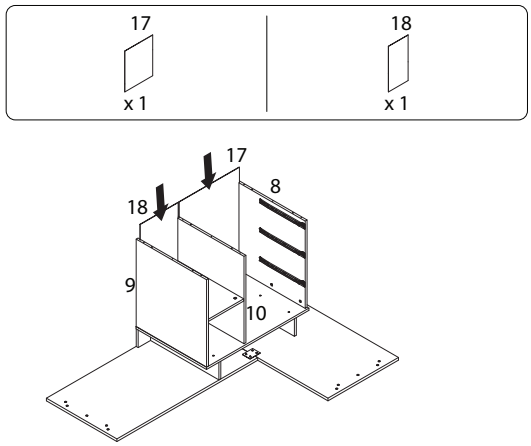

15B

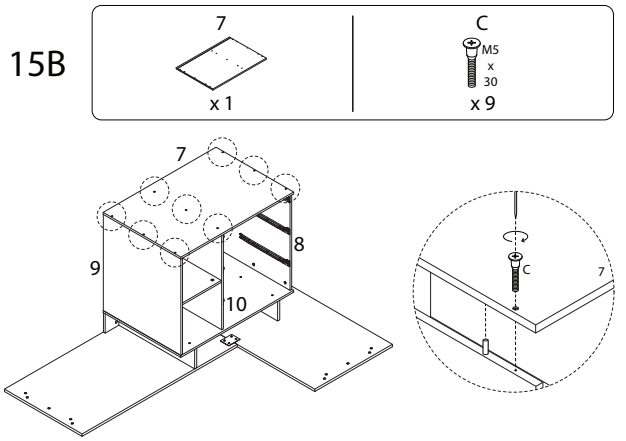

14B

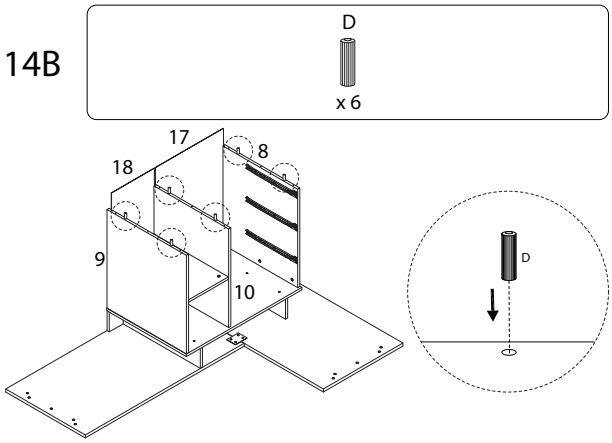

16B

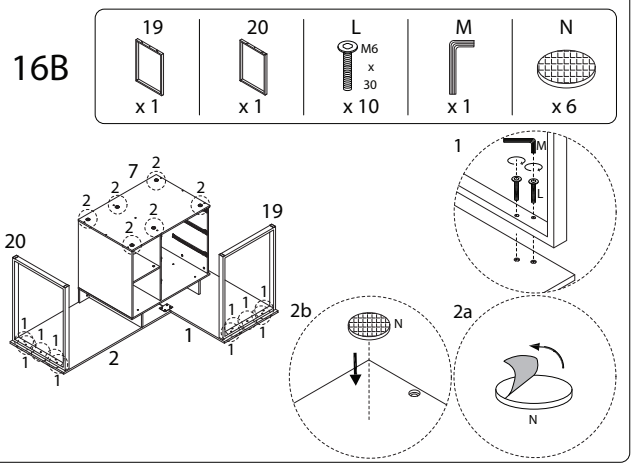

17 x 3

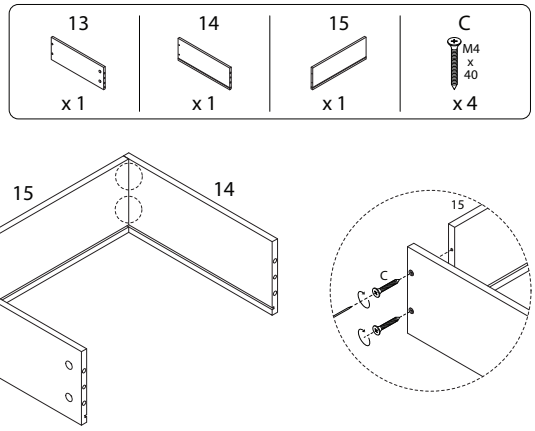

19 x 3

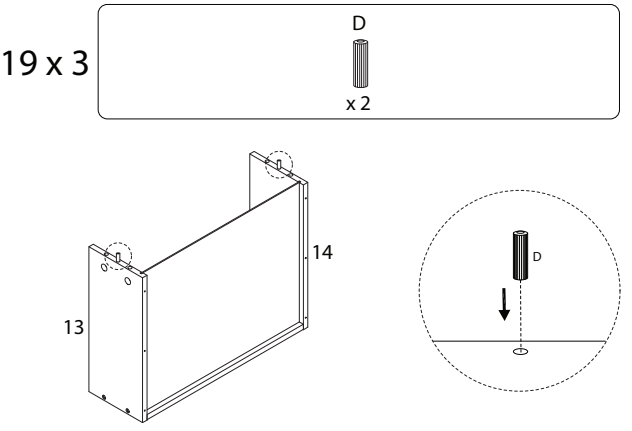

18 x 3

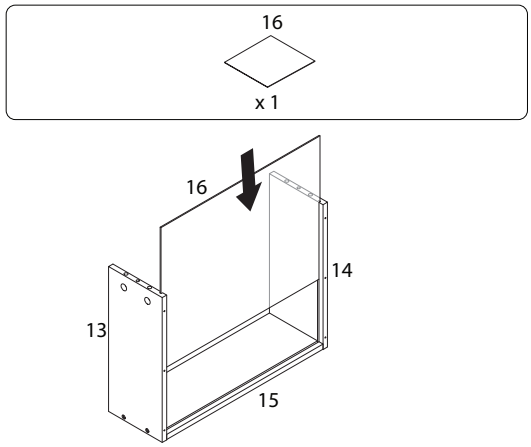

20 x 3

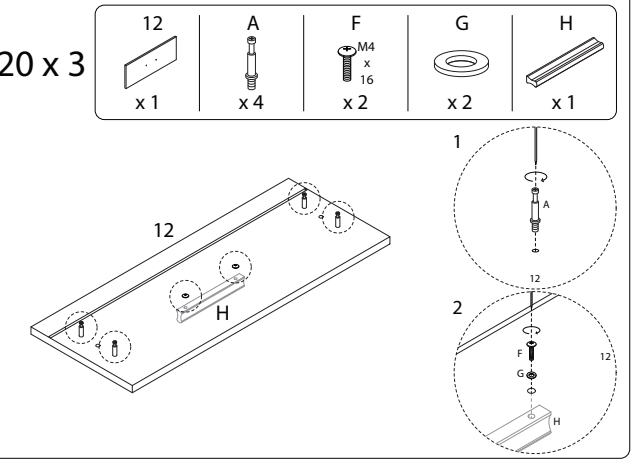

21 x 3

B

x 4

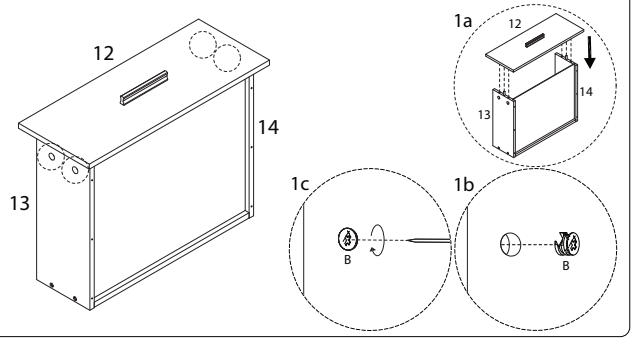

22 x 3

E M3 x 12 — x 6

DL — x 1

DR — x 1

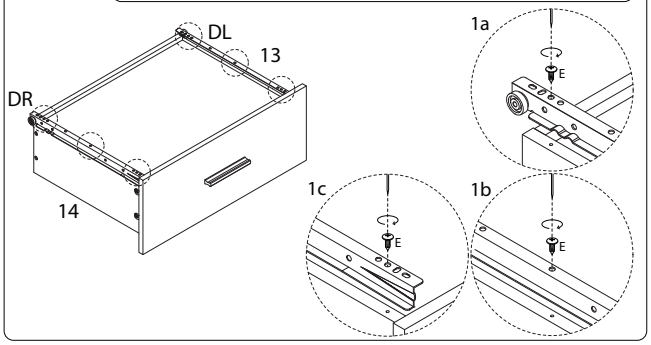

23A

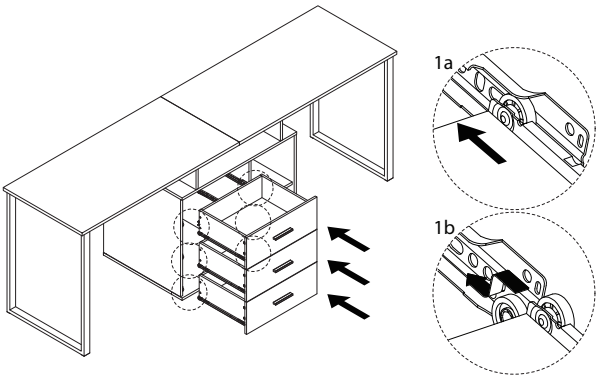

23B

