

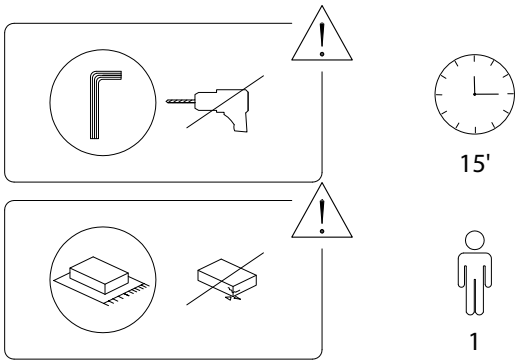
15'
1

1/5

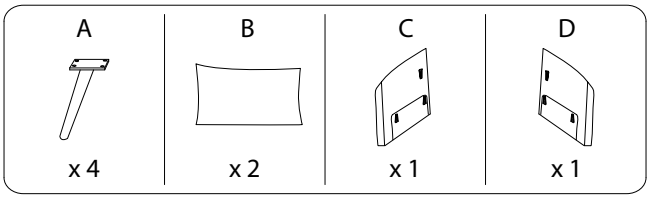
A
B
C
D
x 4
x 2
x 1
x 1

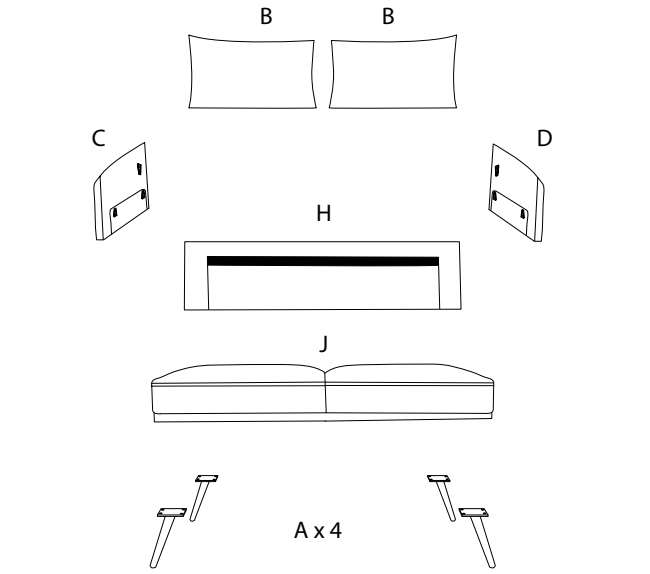
B
B
C
D
H
J

A x 4

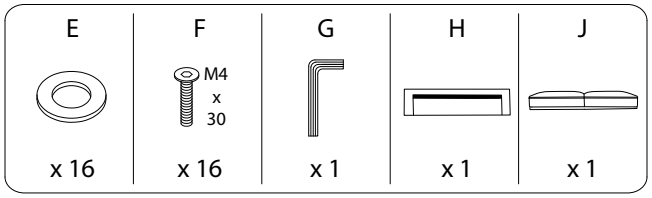
E
F
G
H
J
M4
x
30
x 16
x 16
x 1
x 1
x 1

2/5

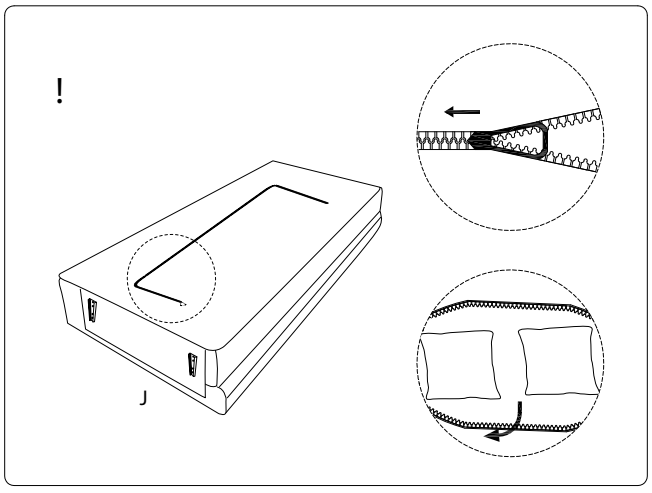
!
J

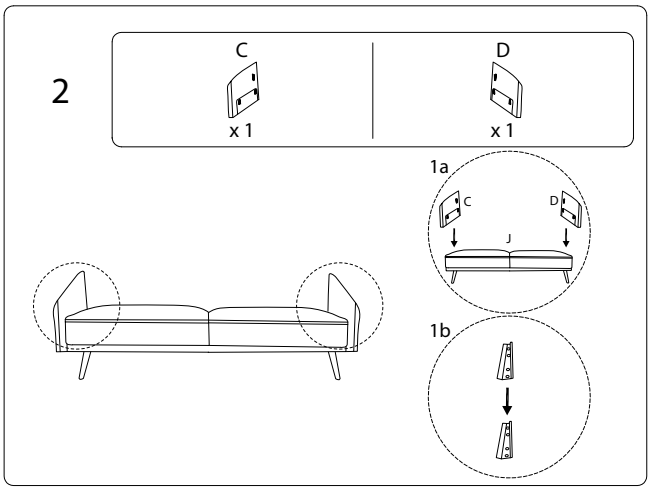
2
C
D
x 1
x 1
1a
C
D
J
1b

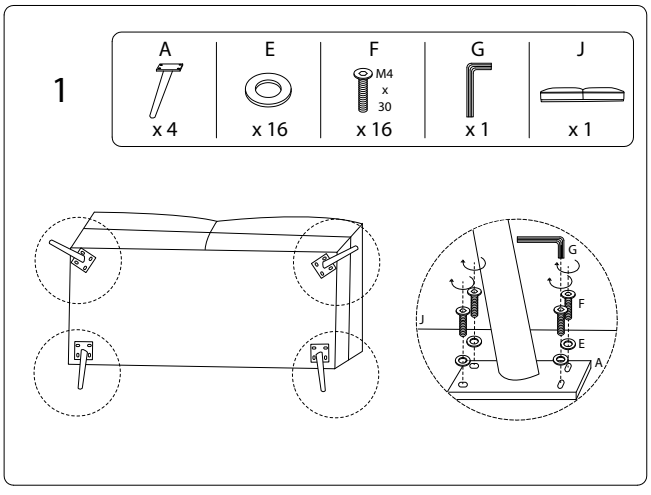
1
A
E
F
G
J
M4
x
30
x 4
x 16
x 16
x 1
x 1
G
F
J
E
A

3/5

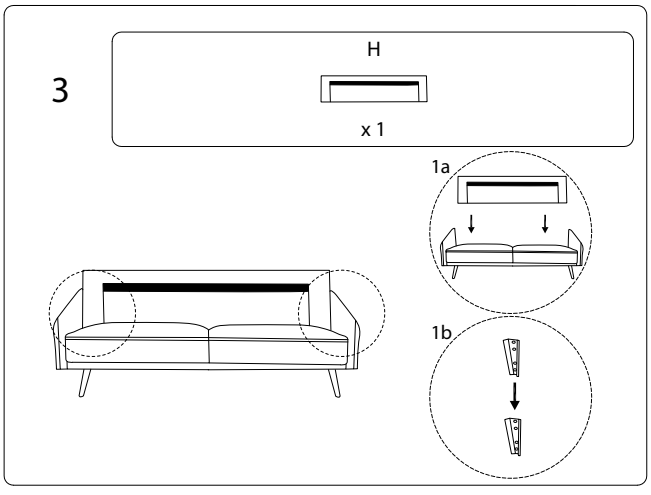
3
H
x 1
1a
1b

4/5

4

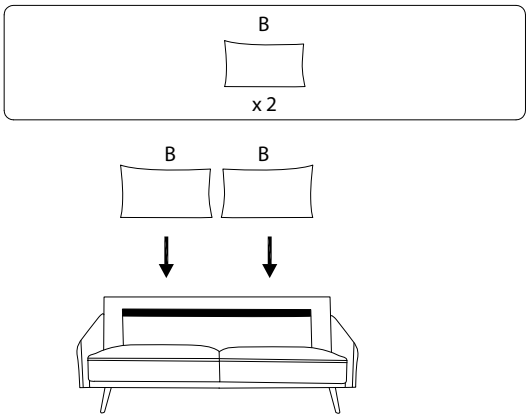

1352/MAURA/270421/