VAUCLUSE

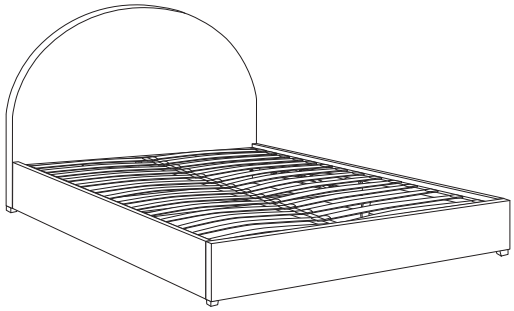

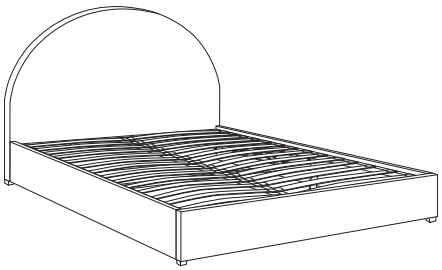

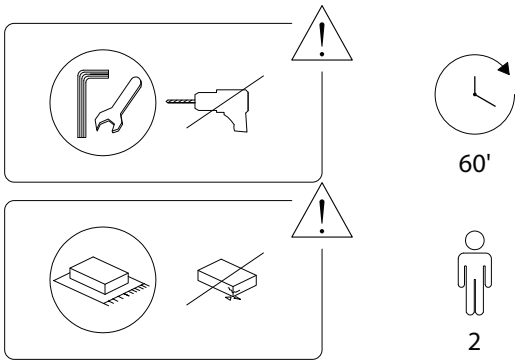

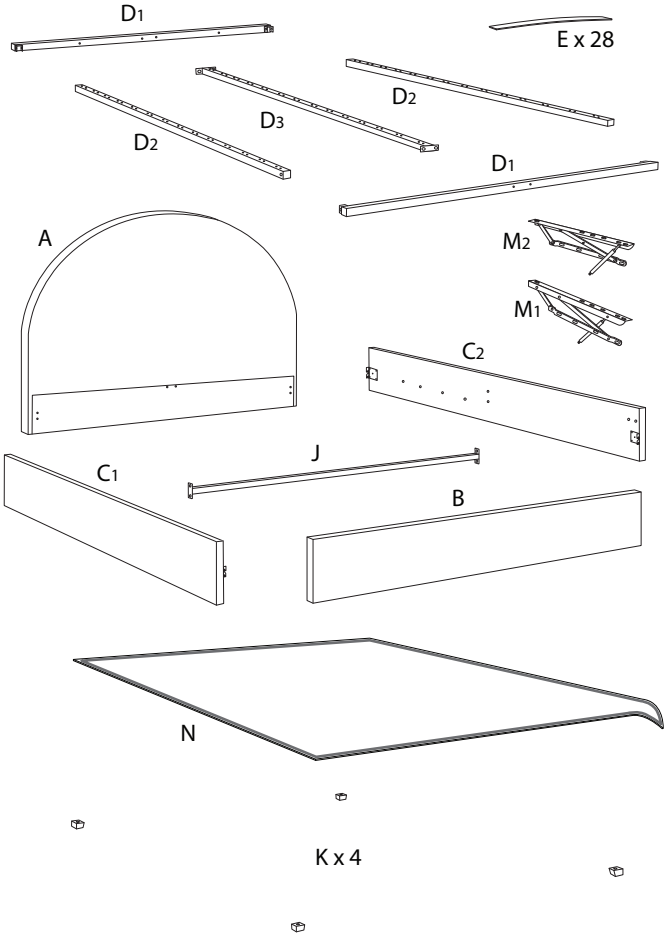

A	B	C1	C2
x 1	x 1	x 1	x 1
D1	D2	D3	E
x 2	x 2	x 1	x 28
F	G	H	I
x 2	x 1	x 2	x 2
J	J	L	M1
x 1	x 4	x 2	x 1
M2	N	O	P
x 1	x 1	x 28	x 14

1	2	3	4
M8 x 55	M8 x 45	M8 x 30	M6 x 40
x 4	x 18	x 8	x 8
5	**6**	**7**	**8**
M6 x 20		M8	M8
x 12	x 14	x 30	x 30
9	**10**	**11**	**12**
M8		M6	M6
x 1	x 1	x 20	x 20
13	**14**	**15**	**16**
	M6		
x 1	x 1	x 2	x 3

1

A	B	K	2	7	8	9
			M8 x 45	M8	M8	M8
x 1	x 1	x 4	x 4	x 4	x 4	x 1

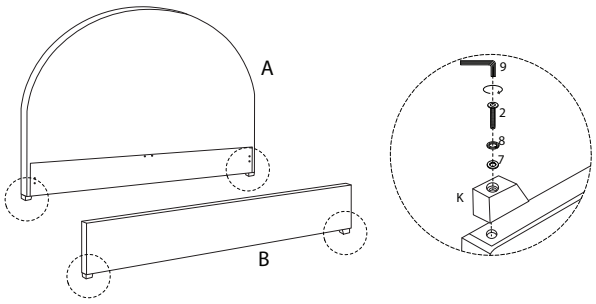

2

I	1	7	8	9
	M8 x 55	M8	M8	M8
x 2	x 4	x 4	x 4	x 1

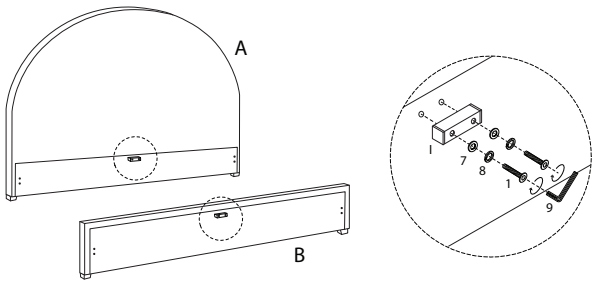

3

C_1	C_2	3	7	8	9
		M8 x 30	M8	M8	M8
x 1	x 1	x 8	x 8	x 8	x 1

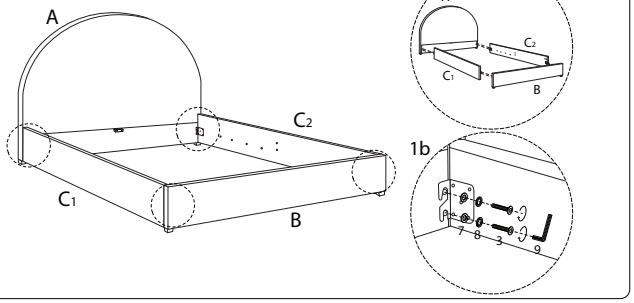

5

L	M_1	4	11	12	14
		M6 x 40	M6	M6	M6
x 1	x 1	x 4	x 4	x 4	x 1

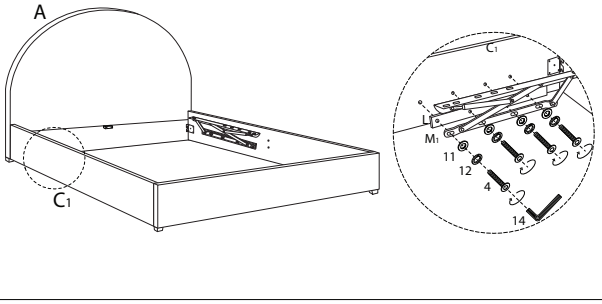

4

L	M_2	4	11	12	14
		M6 x 40	M6	M6	M6
x 1	x 1	x 4	x 4	x 4	x 4

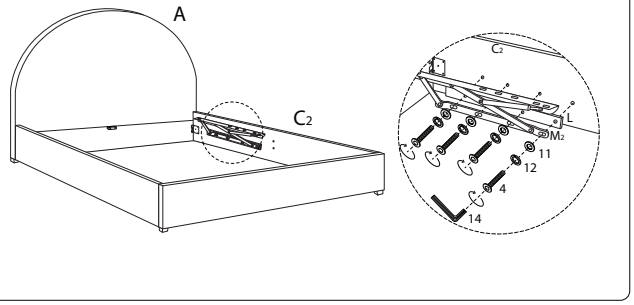

6

F	5	11	12	14
	M6 x 20	M6	M6	M6
x 2	x 8	x 8	x 8	x 1

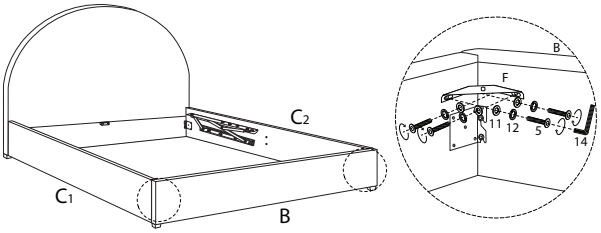

7

J	5	11	12	14
x 1	x 4	x 4	x 4	x 1

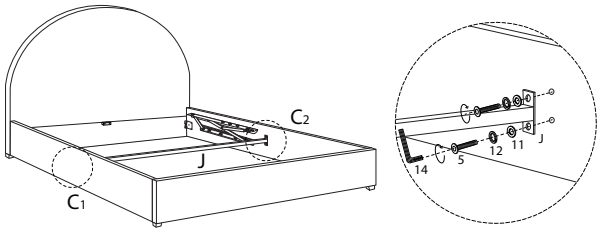

8

15
x 2

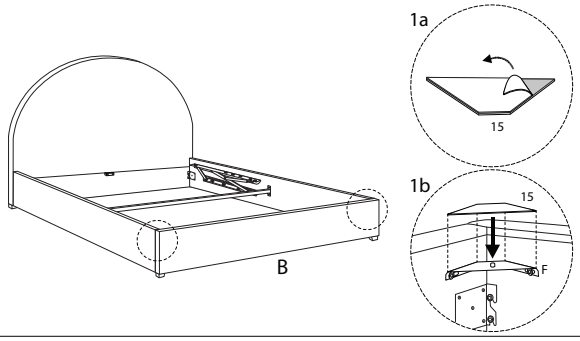

8/14

751/VAUCLUSE/270225/

9

16
x 3

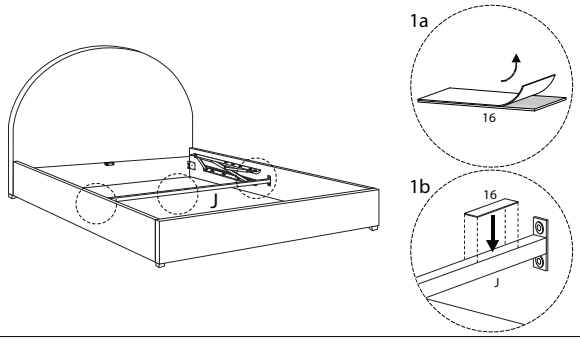

10

D1	H	2	6	7	8	9	10
x 1	x 2	x 2	x 2	x 2	x 2	x 1	x 1

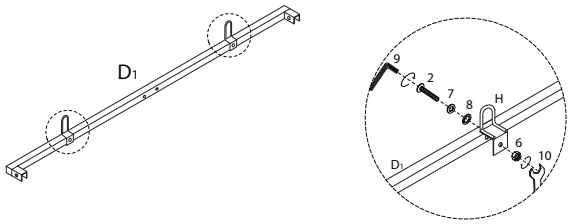

9/14

751/VAUCLUSE/270225/

11

G
x 1

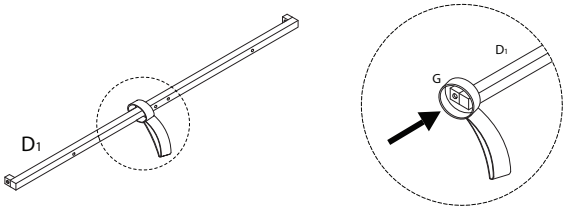

12

D2	2	6	7	8	9	10
x 2	x 4	x 4	x 4	x 4	x 1	x 1

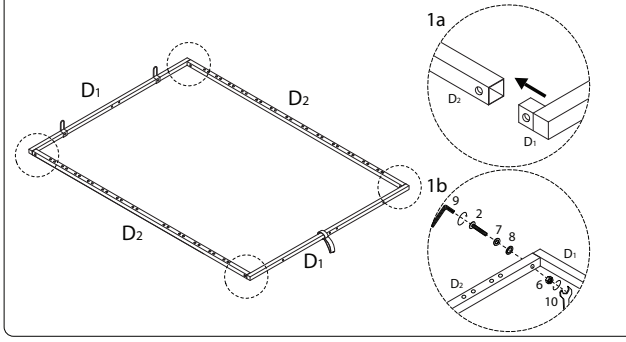

10/14

751/VAUCLUSE/270225/

13

D3	2	6	7	8	9	10
x 1	x 4	x 4	x 4	x 4	x 1	x 1

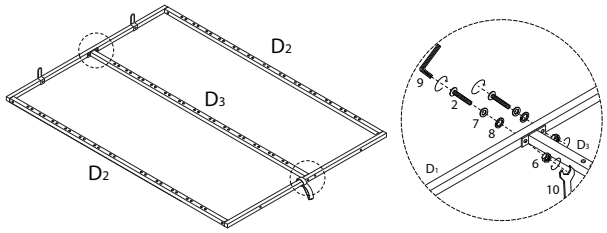

14

2	6	7	8	9	10
x 4	x 4	x 4	x 4	x 1	x 1

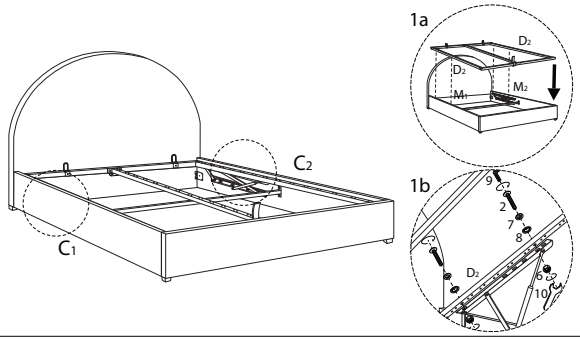

11/14

751/VAUCLUSE/270225/

15 x 14

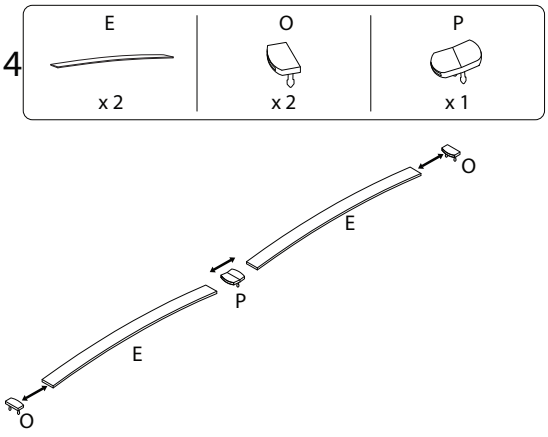

16

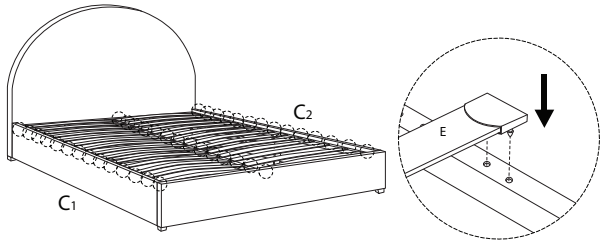

!

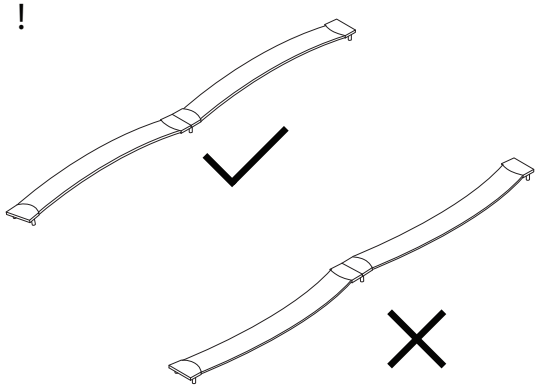

12/14

751/VAUCLUSE/270225/

17

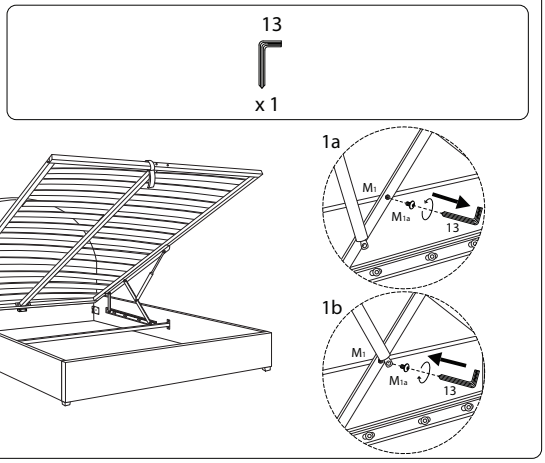

13/14

751/VAUCLUSE/270225/

18

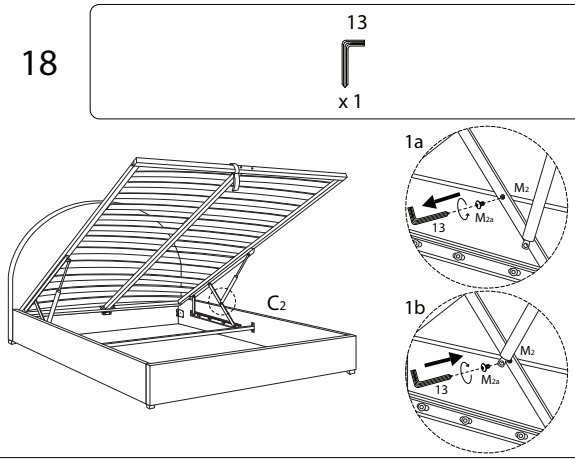

19

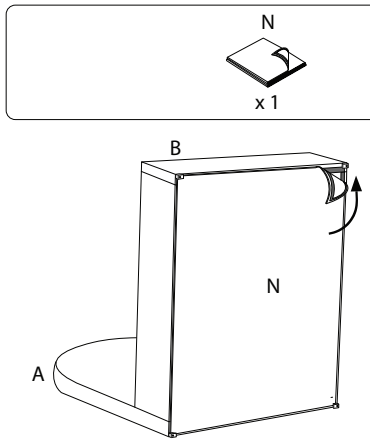

14/14

751/VAUCLUSE/270225/