CASEY

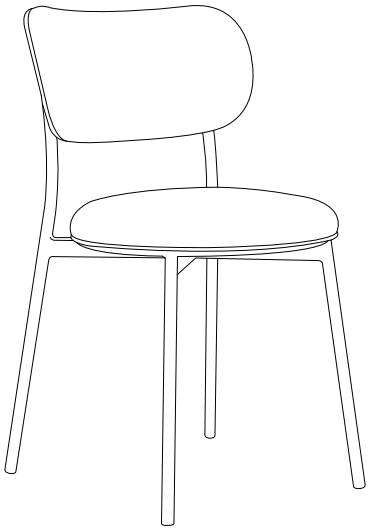

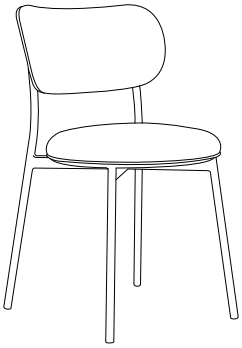

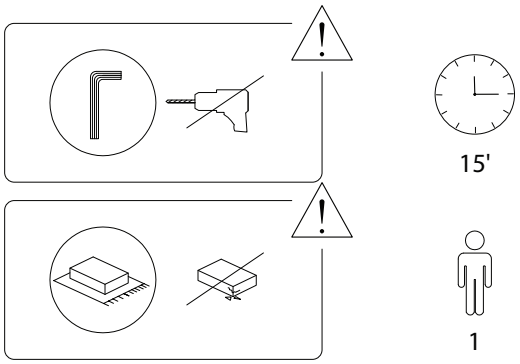

Beliani

1/3

Beliani

715/CASEY/281223/

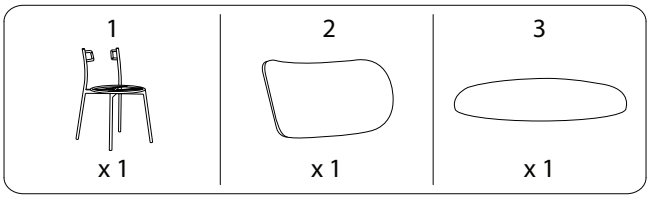

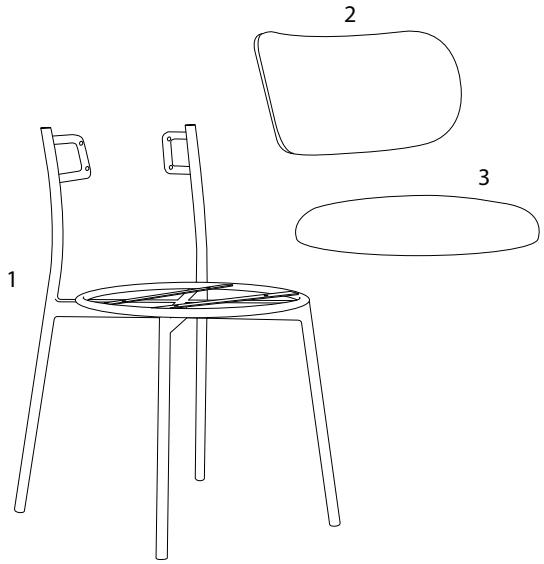

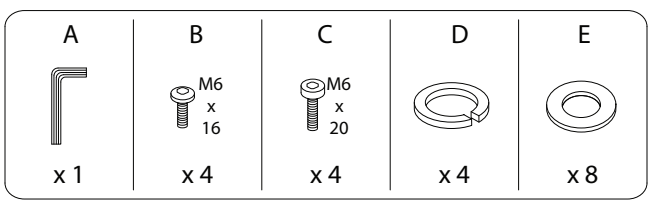

2/3

Beliani

715/CASEY/281223/

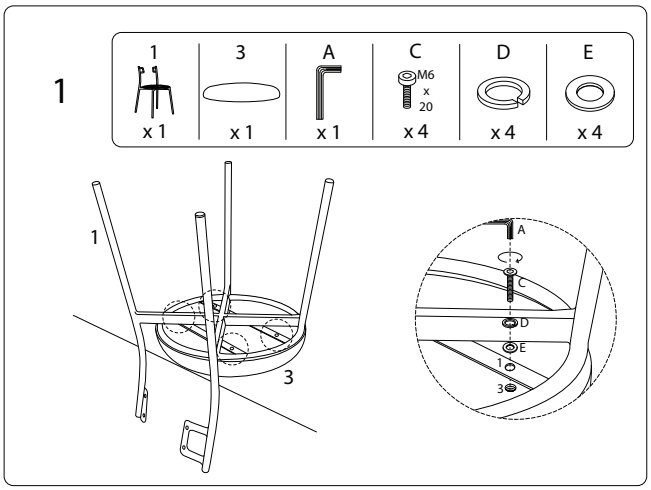

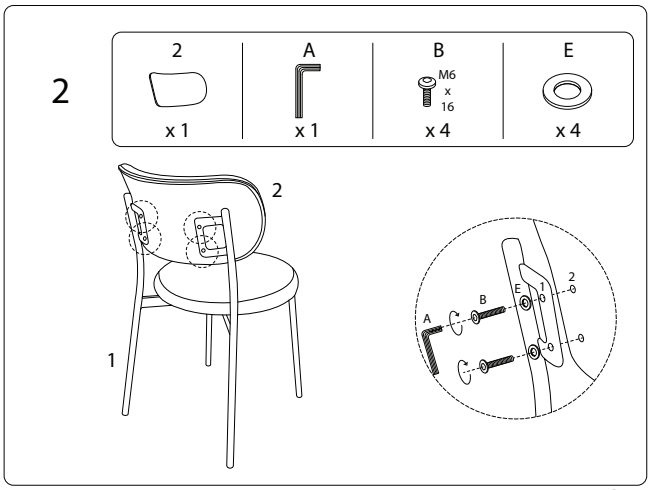

3/3

Beliani

715/CASEY/281223/