

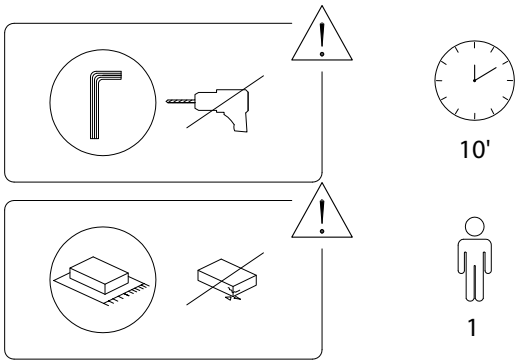
10'
1

1/5

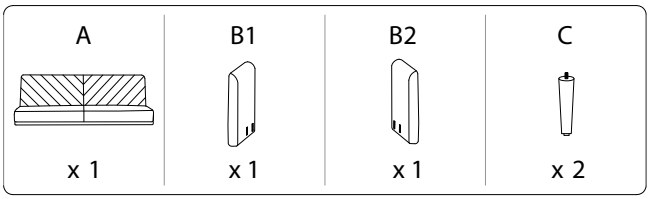
A
x 1
B1
x 1
B2
x 1
C
x 2

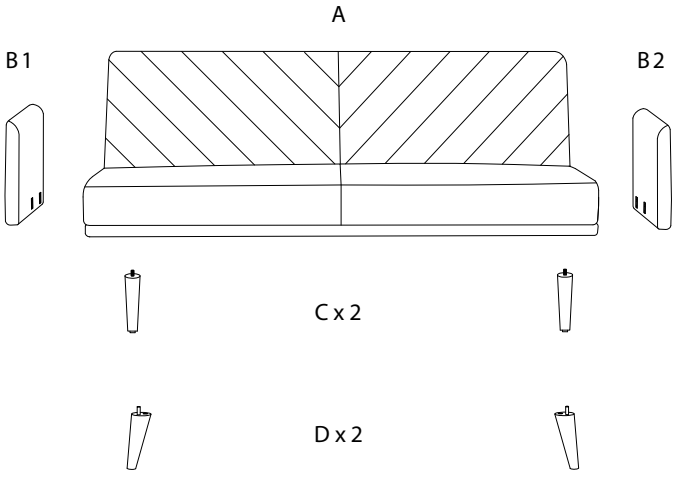
A
B1
B2
C x 2
D x 2

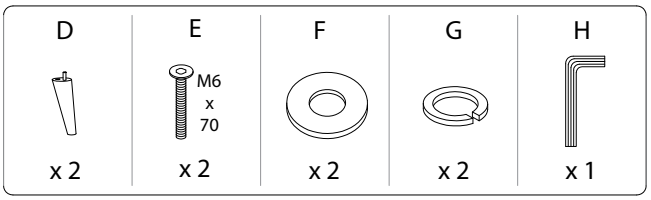
D
x 2
E
M6
x
70
x 2
F
x 2
G
x 2
H
x 1

2/5

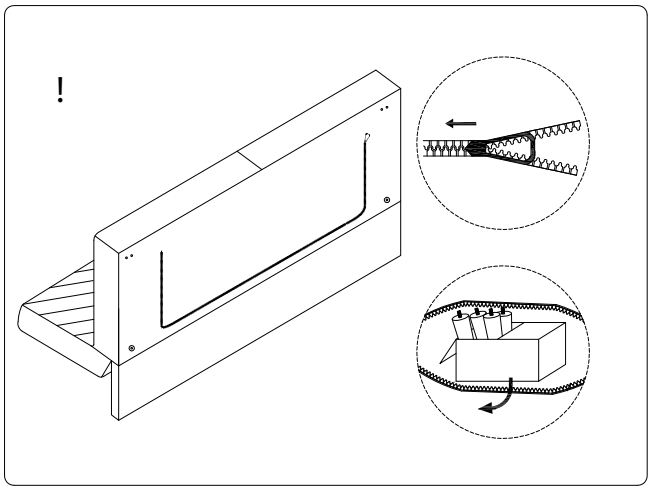
!

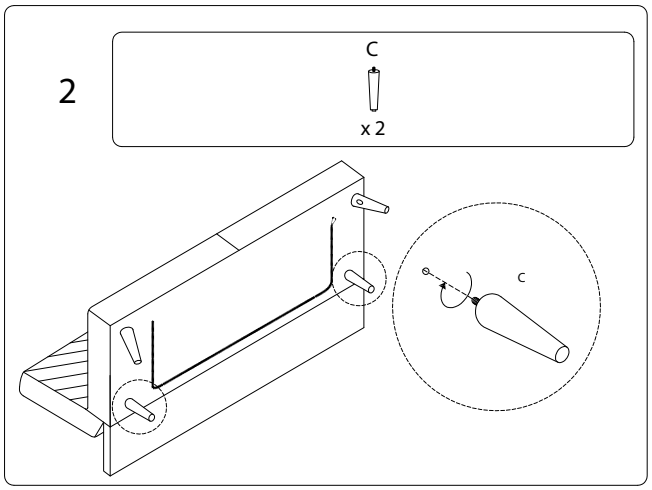
2
C
x 2
C

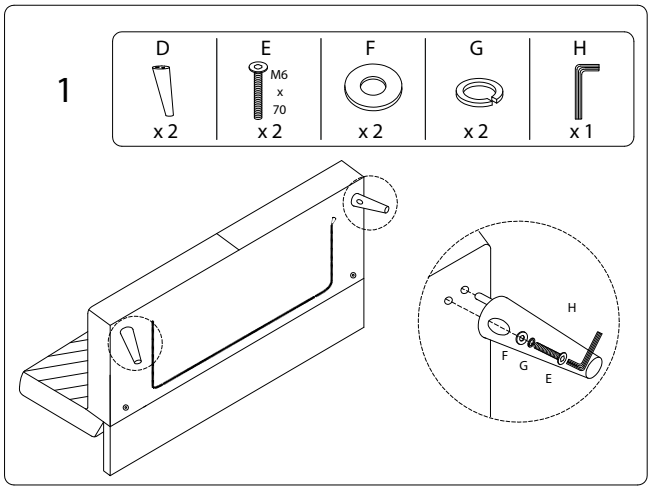
1
D
x 2
E
M6
x
70
x 2
F
x 2
G
x 2
H
x 1
H
F
G
E

3/5

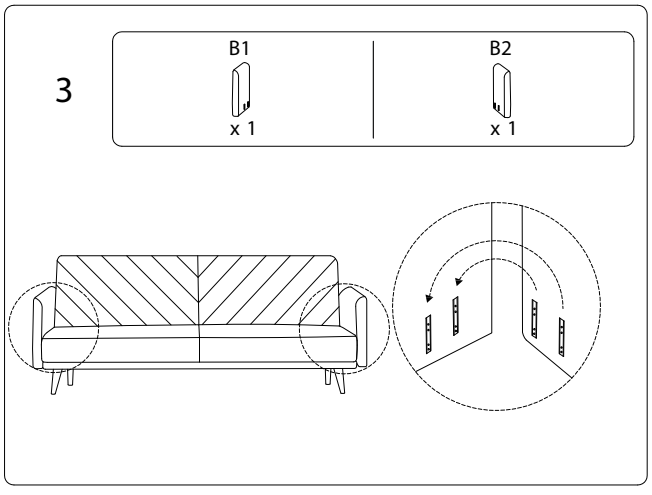
3
B1
x 1
B2
x 1

4/5

4

