ARICA

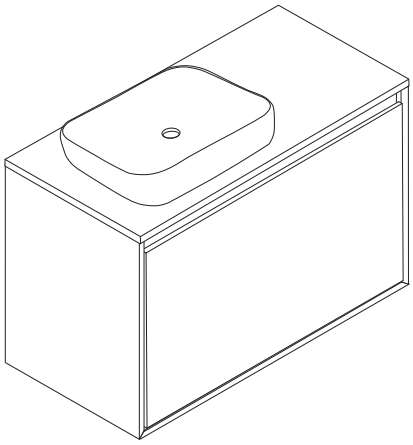

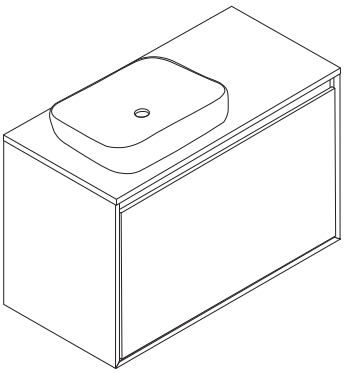

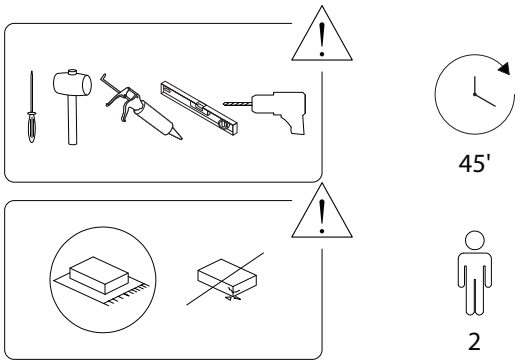

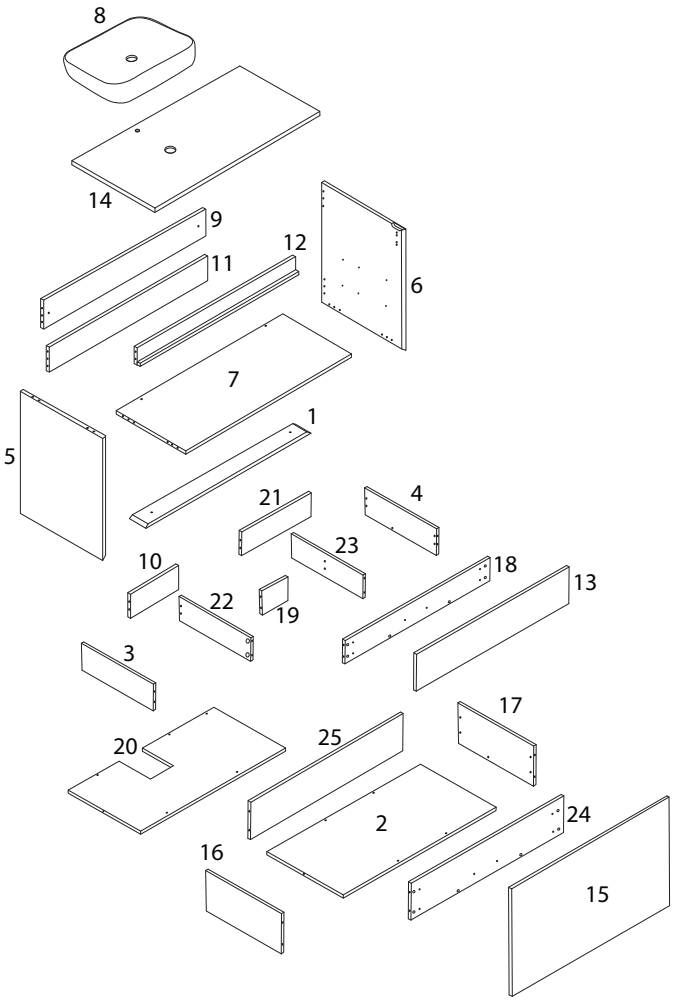

1 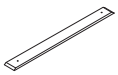 x 1	2 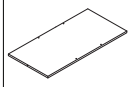 x 1	3  x 1	4  x 1	5 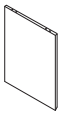 x 1
6 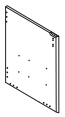 x 1	7 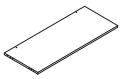 x 1	8  x 1	9 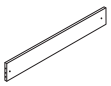 x 1	10  x 1
11 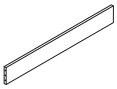 x 1	12 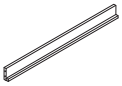 x 1	13 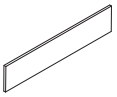 x 1	14 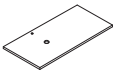 x 1	15 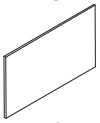 x 1
16  x 1	17  x 1	18 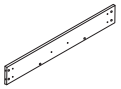 x 1	19  x 1	20 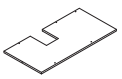 x 1
21  x 1	22  x 1	23  x 1	24 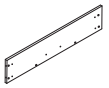 x 1	25 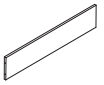 x 1

N1  x 59	N2  x 59
N4  x 12	N7L 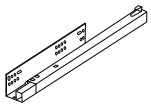 x 2
N7R 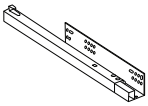 x 2	N10  M4 x 14 x 32
N11  M4 x 25 x 11	N12  M6 x 25 x 4
N13₁ 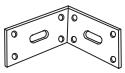 x 2	N13₂  M6 x 70 x 2
N13₃  x 2	

1

5	6	7	9	11	N1	N4
x 1	x 1	x 1	x 1	x 1	x 18	x 12

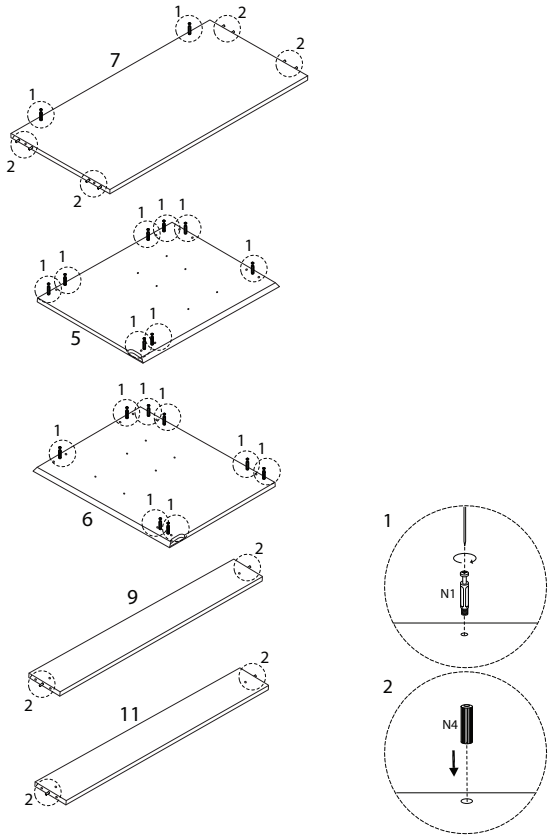

2

2	3	4	16	17
x 1	x 1	x 1	x 1	x 1

18	20	22	23	N1
x 1	x 1	x 1	x 1	x 41

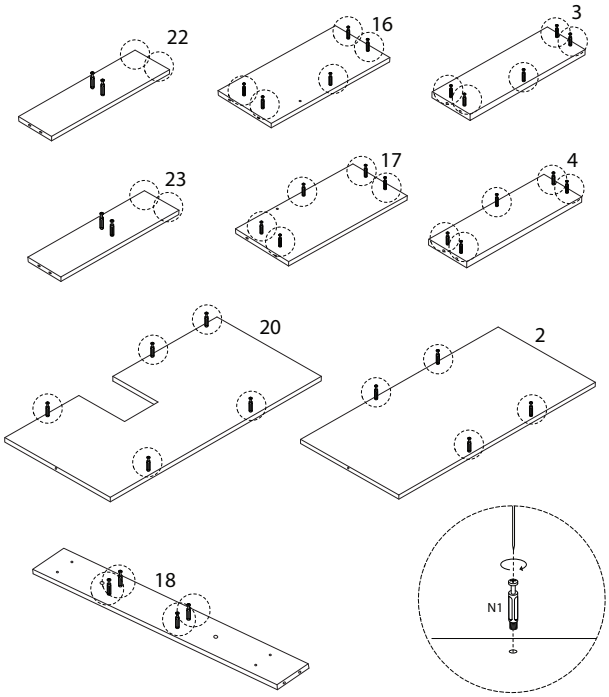

3

N2 x 2

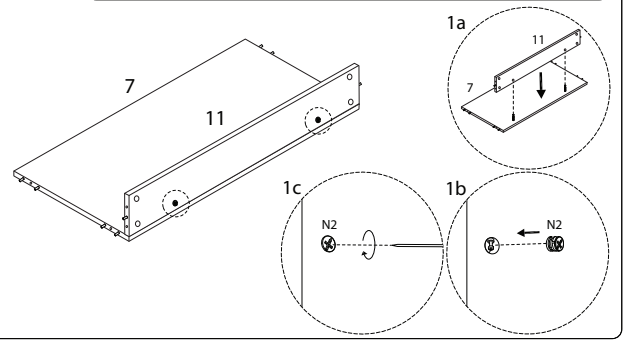

4

N2 x 6

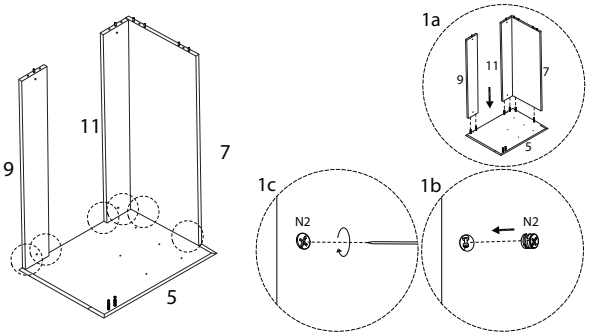

5

12 x 1

N2 x 2

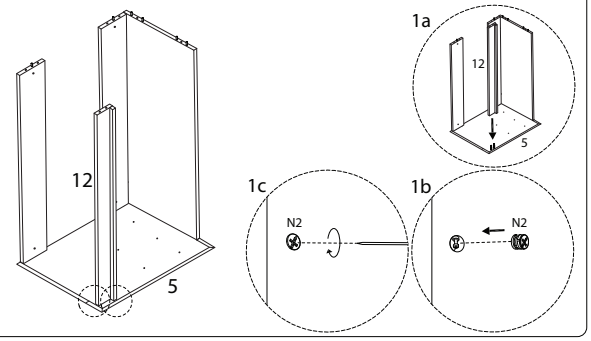

6

N2 x 8

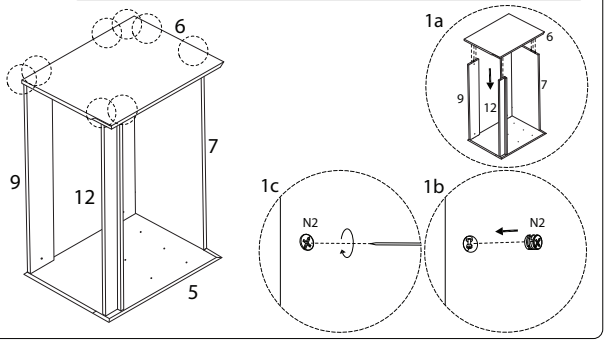

2353/ARICA /020925/

7

1 x 1

N11 M4 x 25 x 3

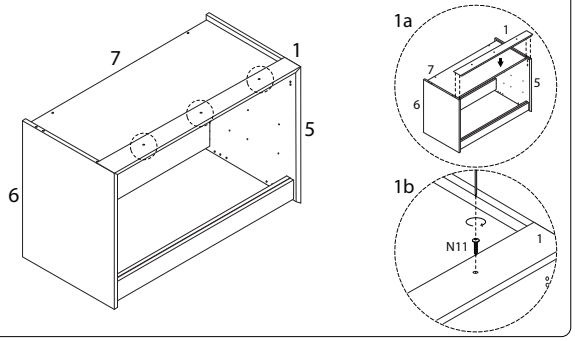

8

N7R x 2

N10 M4 x 14 x 6

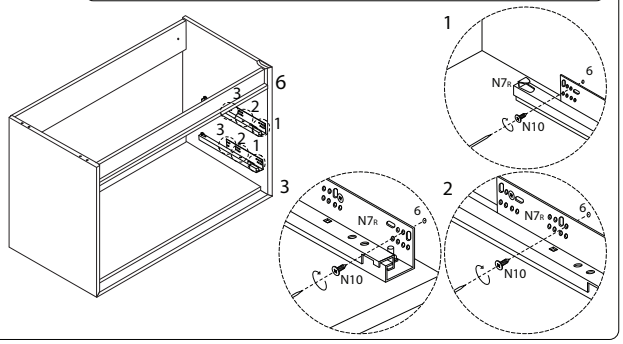

9

N7L x 2

N10 M4 x 14 x 6

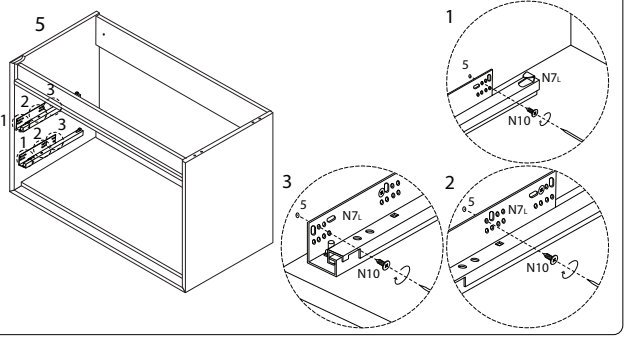

10

19 x 1

N2 x 4

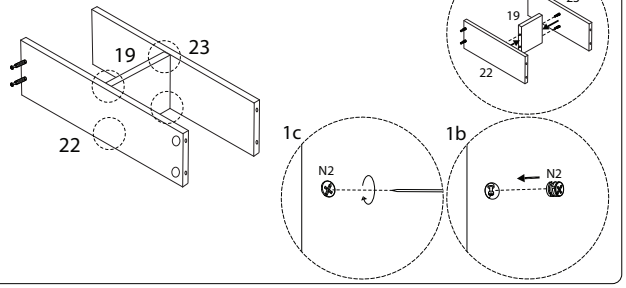

2353/ARICA /020925/

11

10 x 1

21 x 1

N2 x 8

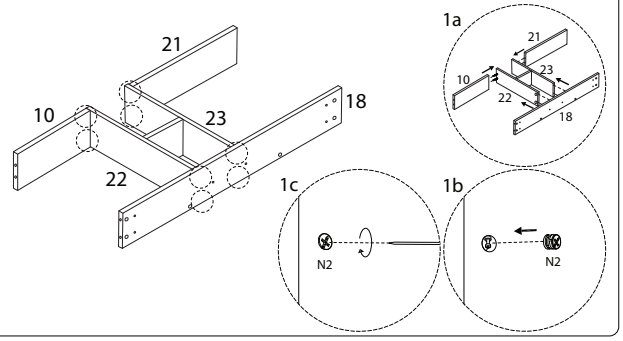

12

N2 x 5

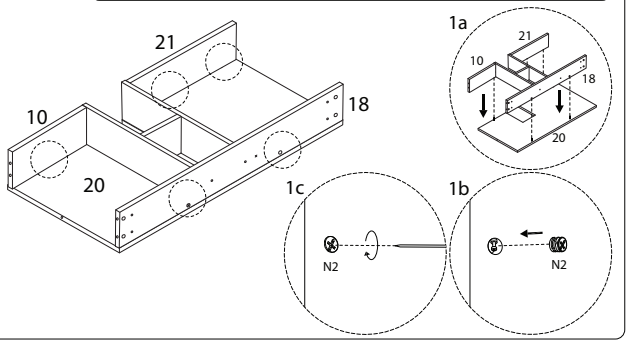

2353/ARICA /020925/

13

N2

x 10

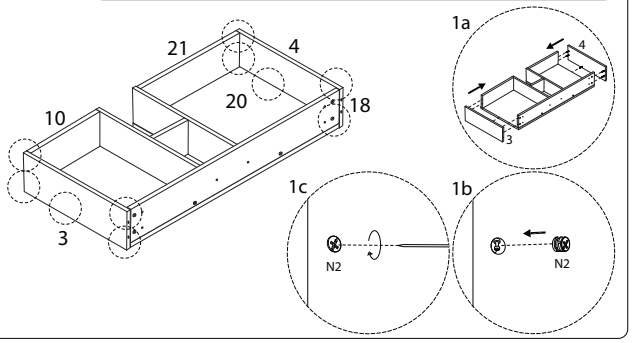

14

24	25	N2
x 1	x 1	x 4

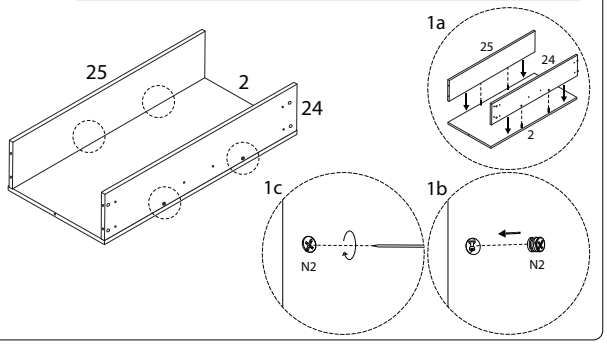

15

N2

x 10

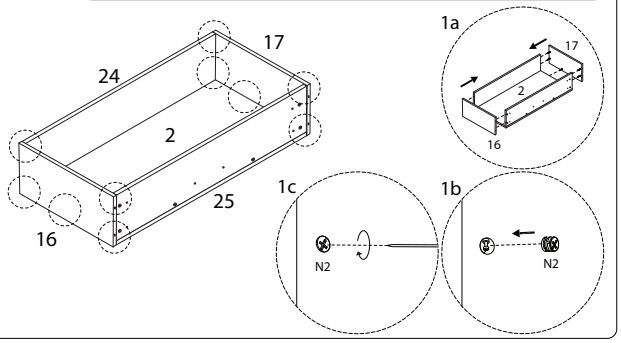

16

13	N12
x 1	M6 x 25 x 2

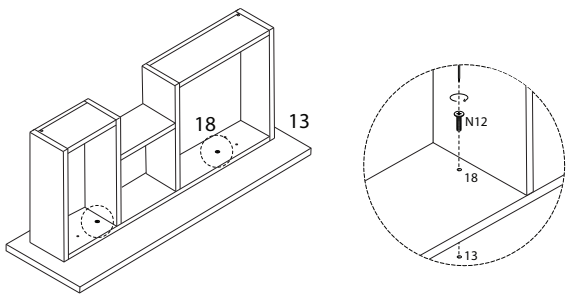

17

15	N12
x 1	M6 x 25 x 2

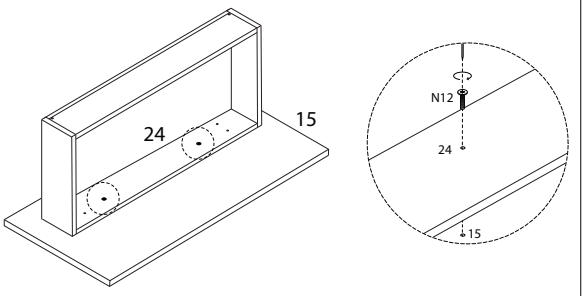

19

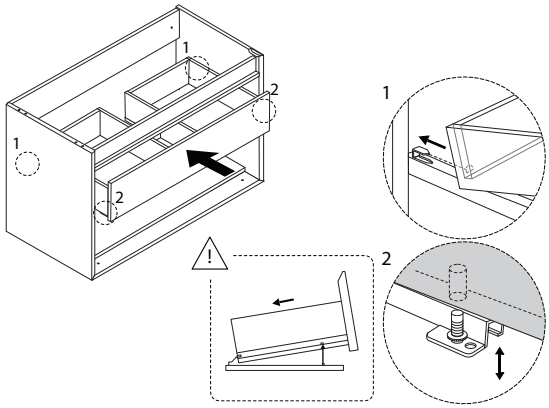

18

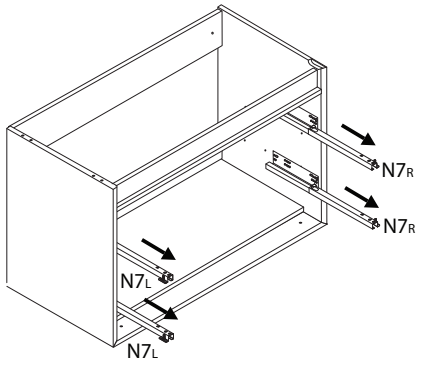

20

N10

M4 x 14

x 2

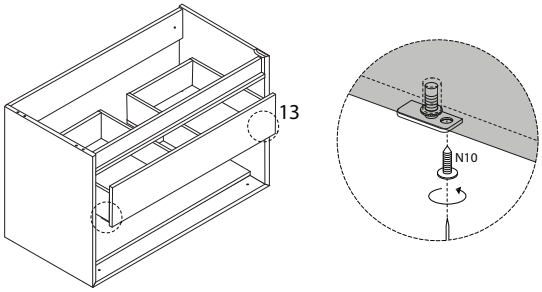

21

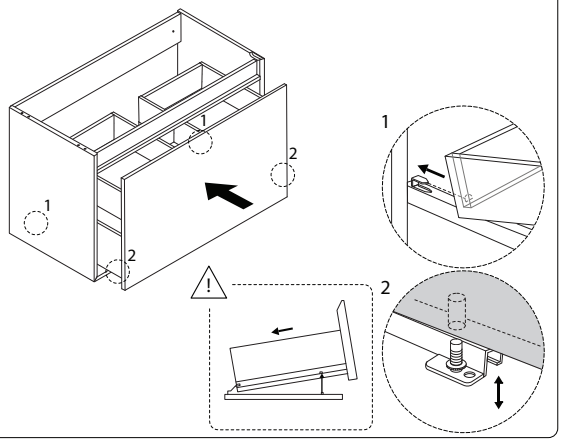

22

N10
M4 x 14
x 2

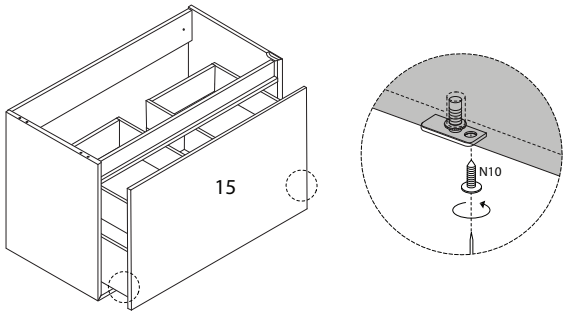

23

N11
M4 x 25
x 4

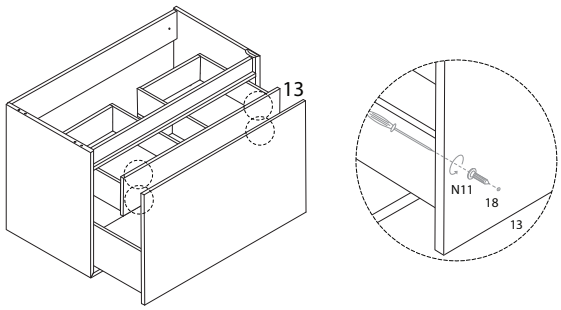

24

N11
M4 x 25
x 4

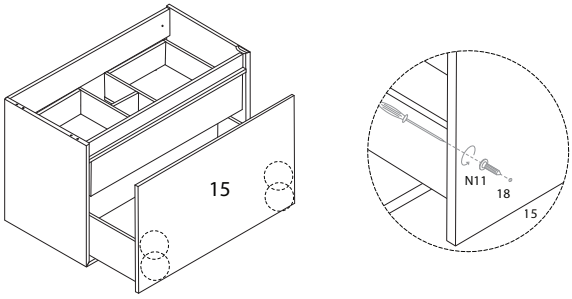

25

N10	N13₁	N13₂	N13₃
M4 x 14		M6 x 70	
x 16	x 2	x 2	x 2

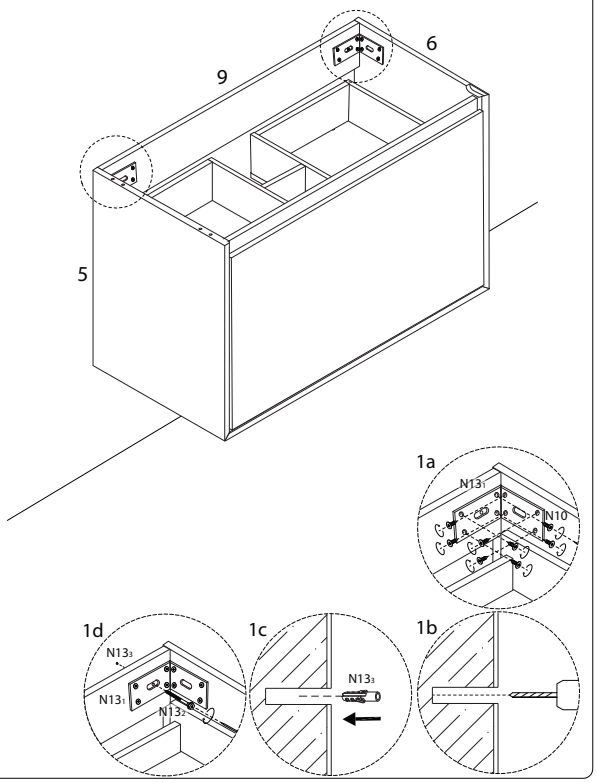

26

8	14
x 1	x 1

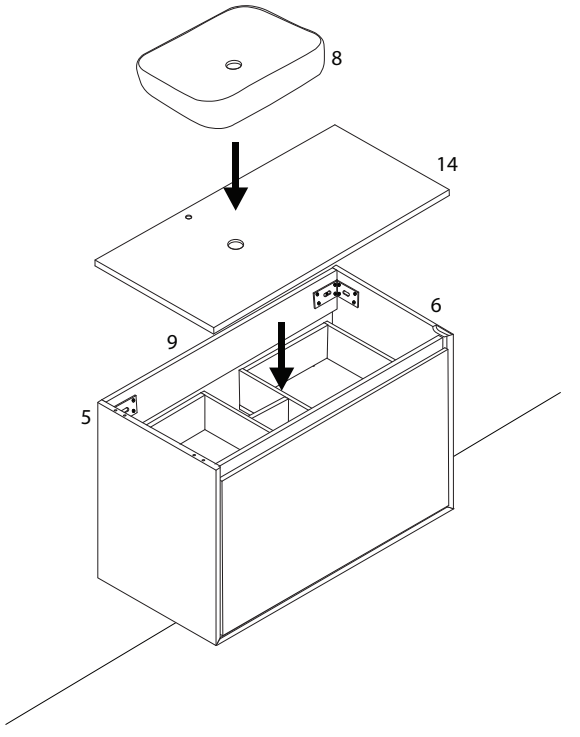

27

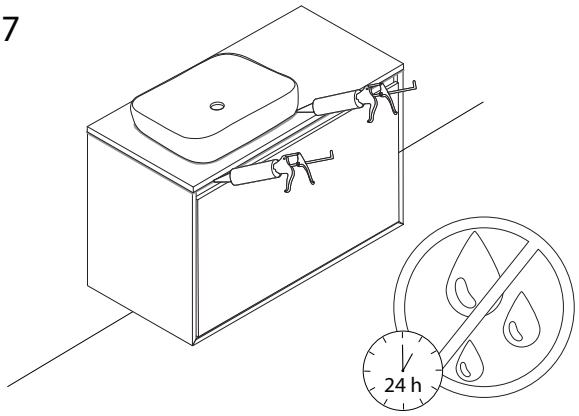

!

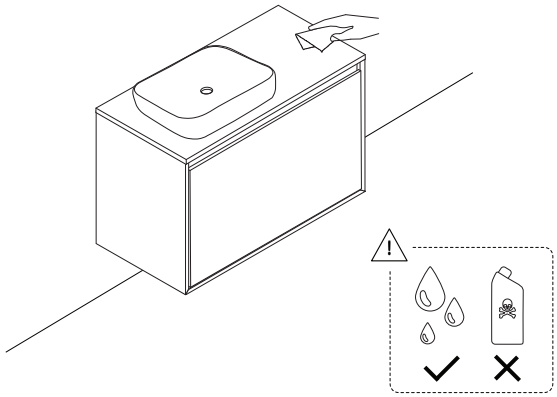

2353/ARICA /020925/