LUCAMA

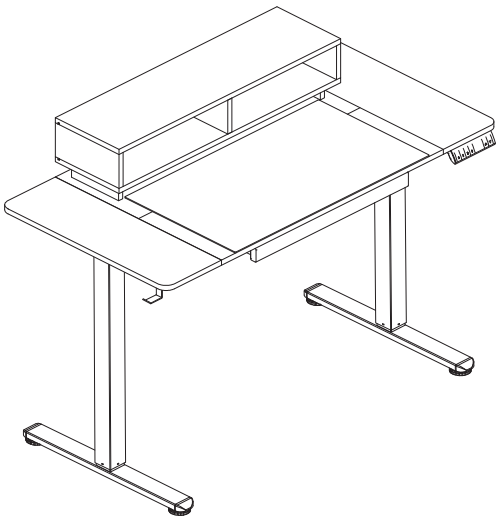

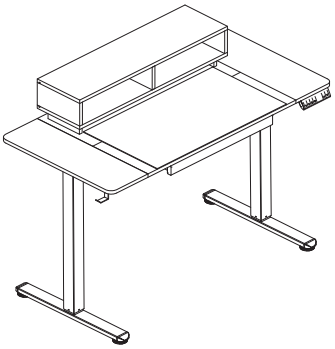

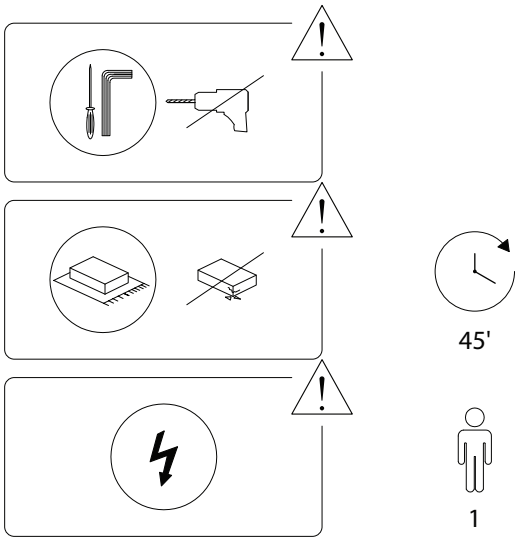

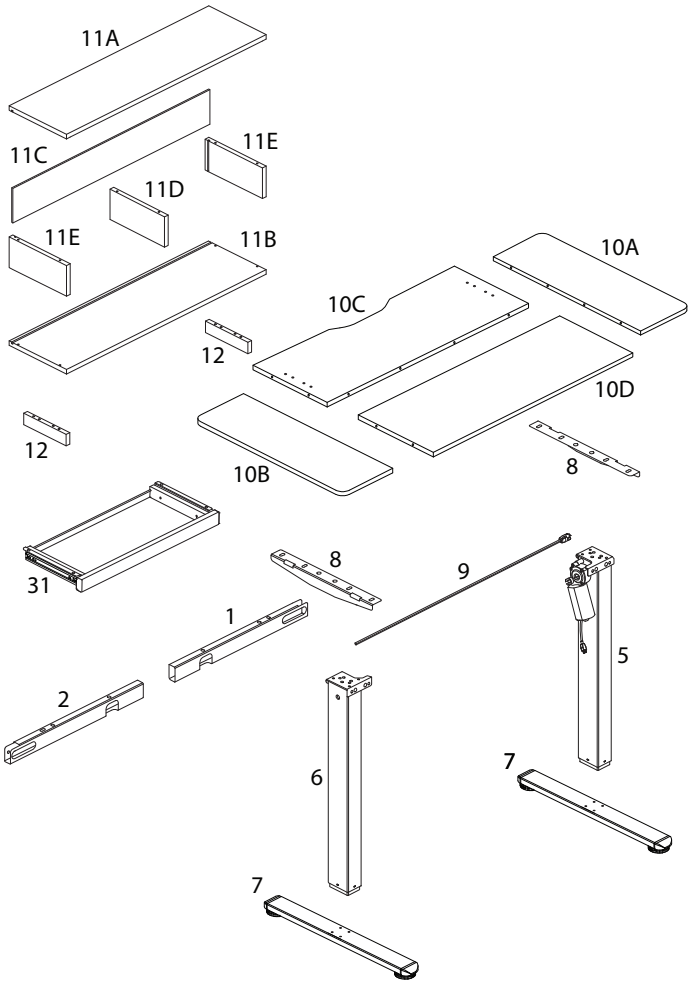

1	2	3	4
x 1	x 1	x 1	x 1
5	6	7	8
x 1	x 1	x 2	x 2
9	10A	10B	10C
x 1	x 1	x 1	x 1
10D	11A	11B	11C
x 1	x 1	x 1	x 1
11D	11E	12	13
x 1	x 2	x 2	x 1

14	15	16	17	18
	 M6 x 12	 M6 x 30	 M6 x 10	 M4 x 8
x 1	x 4	x 8	x 4	x 1
19	**20**	**21**	**22**	**23**
 M2	 Ø8 x 40		 M6 x 10	 M4 x 12
x 1	x 12	x 8	x 36	x 2
24	**25**	**26**	**27**	**28**
 M4 x 12	 M6 x 16			 M4
x 4	x 4	x 2	x 2	x 1
29	**30A**	**30B**	**31**	**32**
			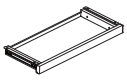	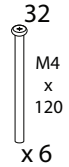 M4 x 120
x 1	x 1	x 1	x 1	x 6
33	**34**	**35**	**36**	**37**
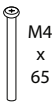 M4 x 65	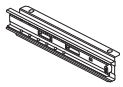	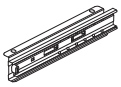	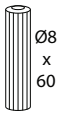 Ø8 x 60	
x 4	x 1	x 1	x 4	x 1

1

1	2	3	4	25	28
x 1	x 1	x 1	x 1	M6 x 16 x 4	M4 x 1

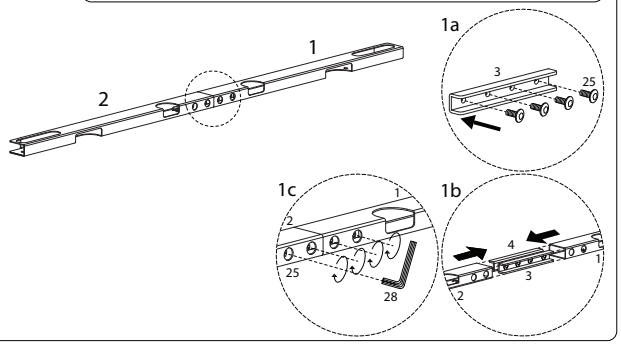

2

5	6	15	28
x 1	x 1	M6 x 12 x 4	M4 x 1

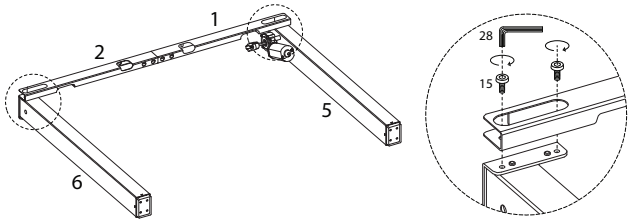

3

7	8	16	17	28
x 2	x 2	M6 x 30 x 8	M6 x 10 x 4	M4 x 1

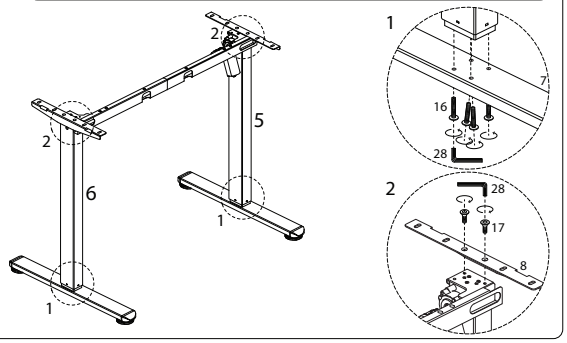

5

10A	10B	10C	10D	20
x 1	x 1	x 1	x 1	Ø8 x 40 x 12

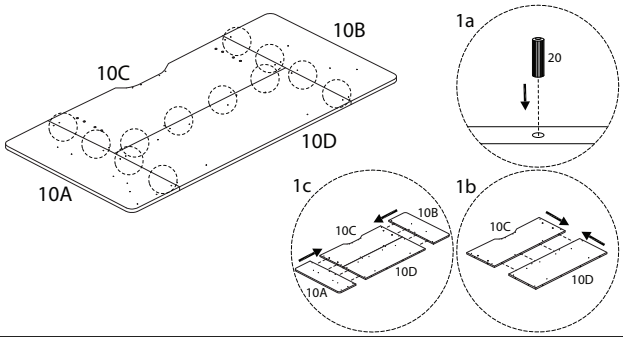

4

9	18	19
x 1	M4 x 8 x 1	M2 x 1

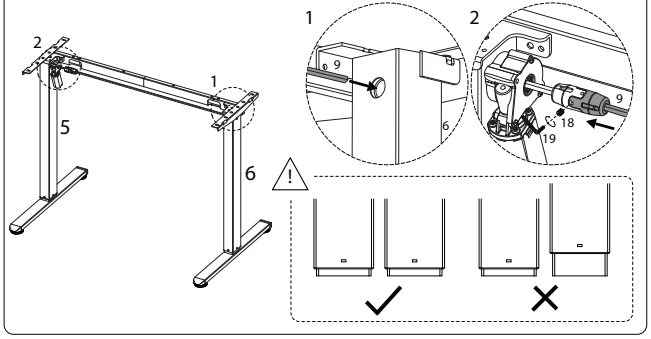

6

21	22	28
x 8	M6 x 10 x 16	M4 x 1

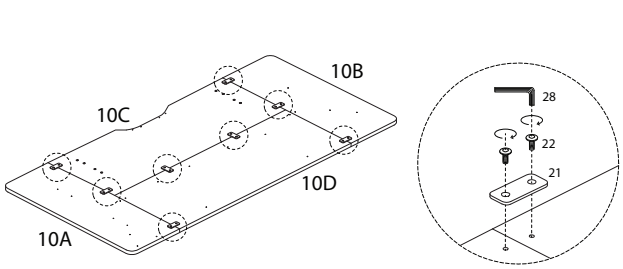

7

31	34	35
x 1	x 1	x 1

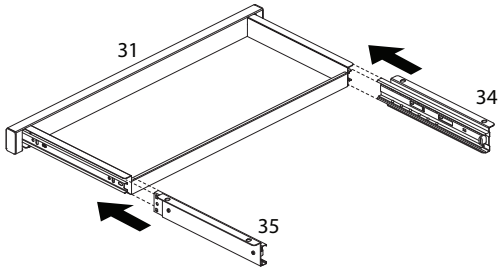

8

22	28
M6 x 10	M4
x 12	x 1

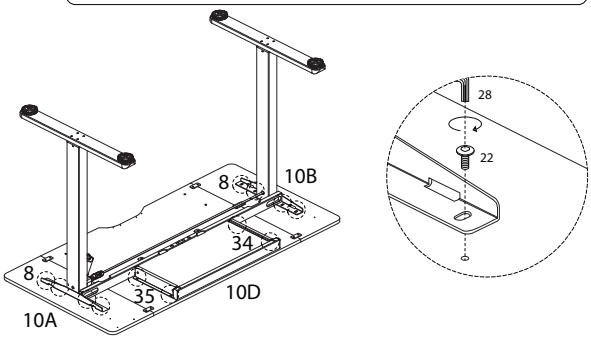

9/14

9

22	26	28
M6 x 10		M4
x 8	x 2	x 1

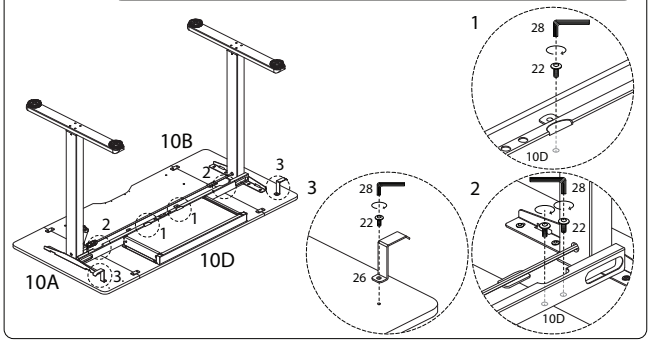

10

13	23	24	29	30A	30B
	M4 x 12	M4 x 12			
x 1	x 2	x 4	x 1	x 1	x 1

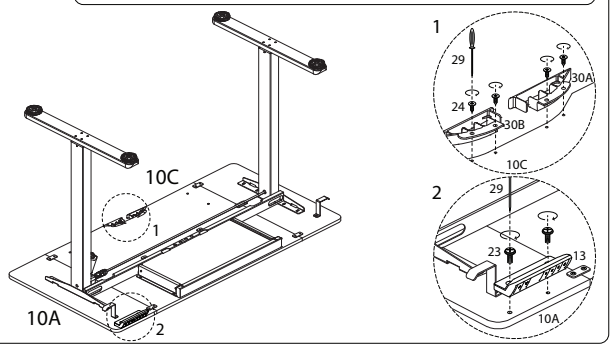

10/14

11

14	27
x 1	x 2

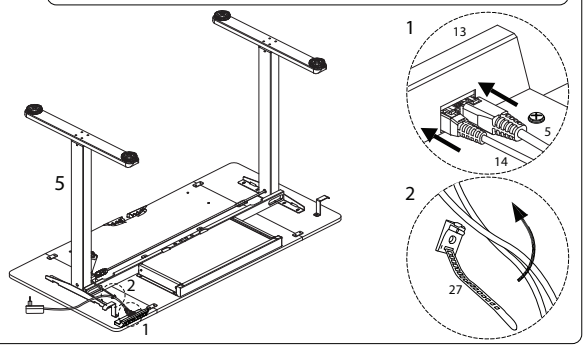

13 x 2

12	36
	Ø8 x 60
x 1	x 2

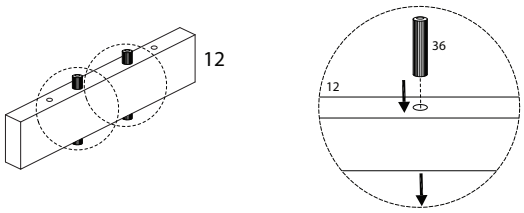

12

11A	11B	11C	11D	11E	32
					M4 x 120
x 1	x 1	x 1	x 1	x 2	x 6

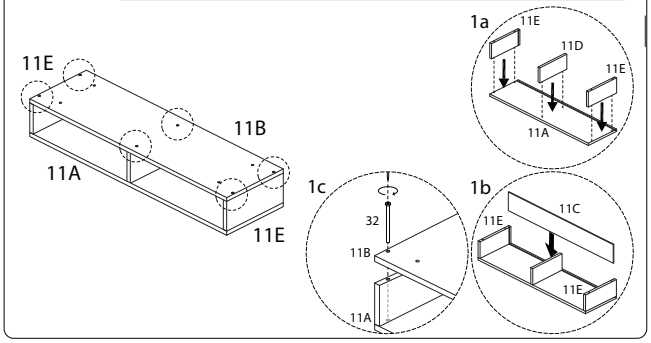

11/14

14

33
M4 x 65
x 4

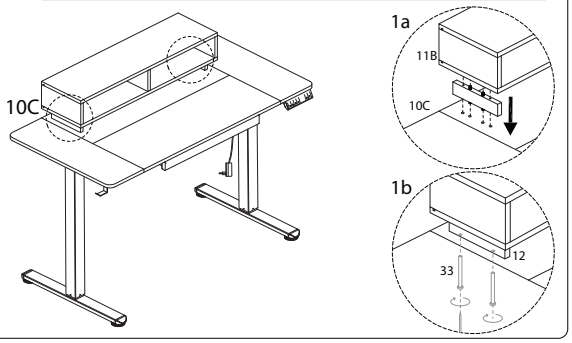

12/14

15

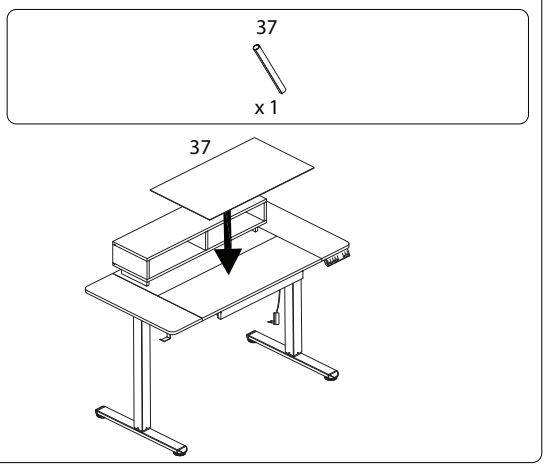

!

