LILA

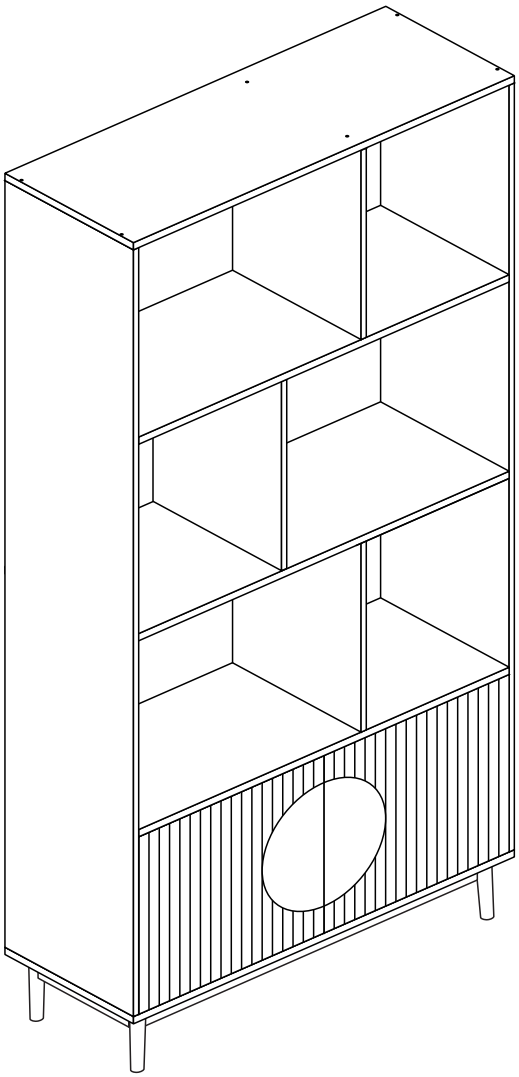

1h

x2

05/2026

COM-001839/COM-001840
COM-001853/COM-001854

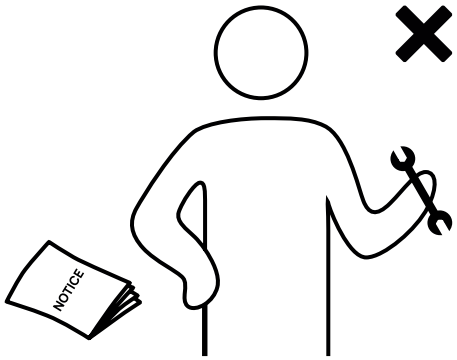
NOTICE

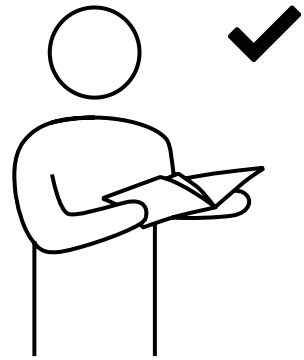

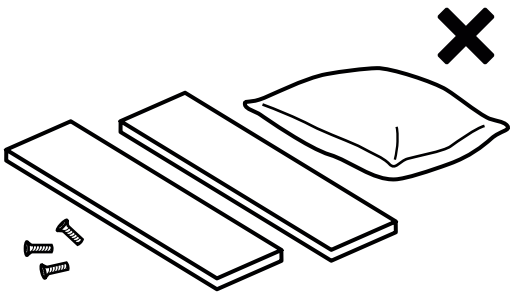

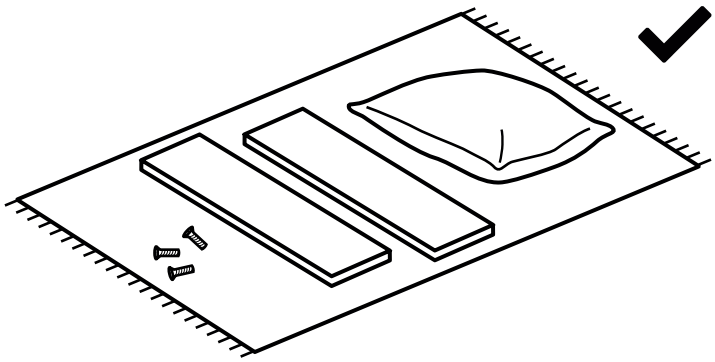

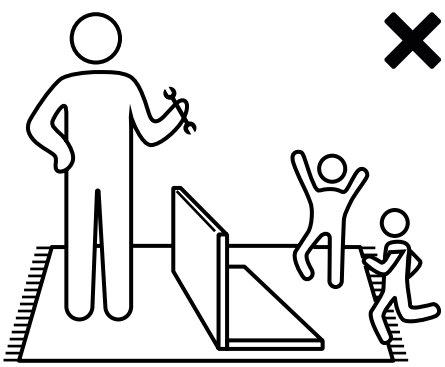

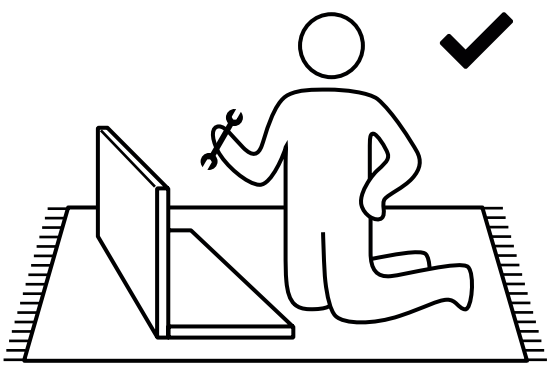

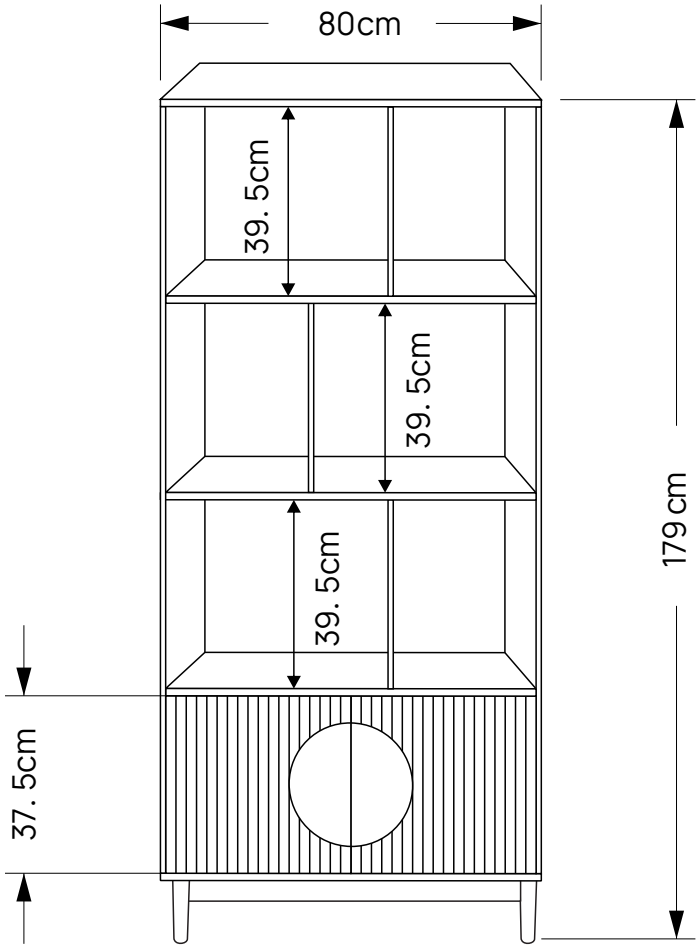
80cm
39. 5cm
39. 5cm
39. 5cm
179 cm
37. 5cm

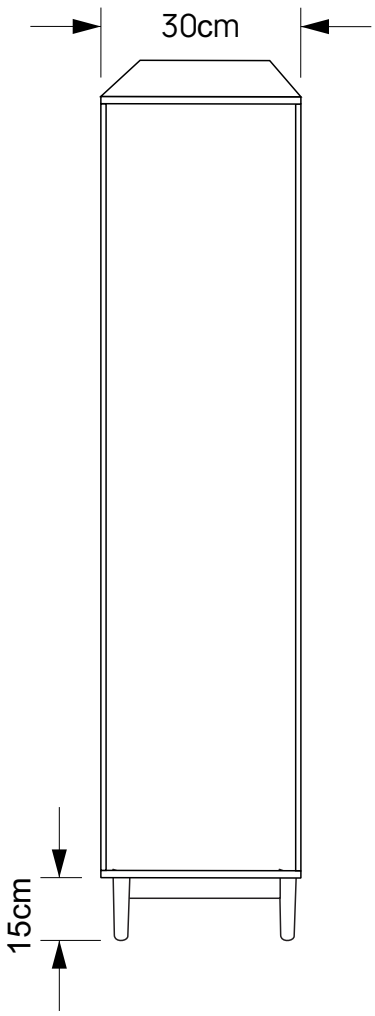
30cm
15cm

	REF	PCS	QTY	DIM
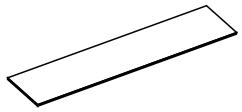	1	BC : PCS-005931 BF : PCS-005948	x 1	162x29,8x1,5cm
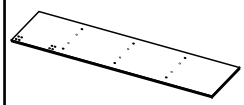	2	BC : PCS-005940 BF : PCS-005957	x 1	162x29,8x1,5cm
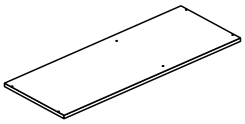	3	BC : PCS-005941 BF : PCS-005958	x 1	80x30x1,5cm
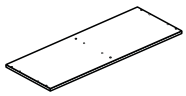	4	BC : PCS-005935 BF : PCS-005952	x 1	80x30x1,5cm
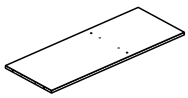	5	BC : PCS-005942 BF : PCS-005959	x 1	76,8x29,7x1,5cm
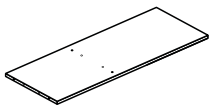	6	BC : PCS-005943 BF : PCS-005960	x 1	76,8x29,7x1,5cm
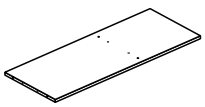	7	BC : PCS-005944 BF : PCS-005961	x 1	76,8x29,7x1,5cm
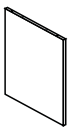	8	BC : PCS-005945 BF : PCS-005962	x 1	39,5x29,6x1,5cm
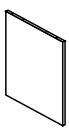	9	BC : PCS-005947 BF : PCS-005964	x 2	39,5x29,6x1,5cm
	10	BC : PCS-005932 BF : PCS-005949	x4	ϕ3,5x15cm
	11	BC : PCS-005936 BF : PCS-005953	x 2	60x6x1,5cm

	REF	PCS	QTY	DIM
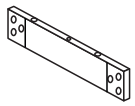	12	BC : PCS-005937 BF : PCS-005954	x 2	16,5x6x1,5cm
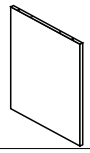	13	BC : PCS-005938 BF : PCS-005955	x 1	39x27,9x1,5cm
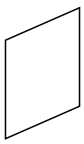	14	BC : PCS-005946 BF : PCS-005963	x 3	41.7x32,4x0,3cm
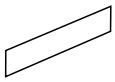	15	BC : PCS-005939 BF : PCS-005956	x 2	79,8x20,6x0,3cm
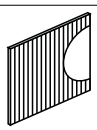	16	BC : PCS-005933 BF : PCS-005950	x 1	38,4x37,9x1,5cm
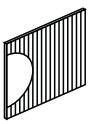	17	BC : PCS-005934 BF : PCS-005951	x 1	38,4x37,9x1,5cm
	A	PCS-005213	x 18	6x35mm
	B	PCS-005214	x 18	ϕ15x9,5mm
	C	PCS-005215	x 42	6x30mm
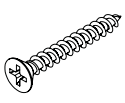	D	PCS-005216	x 30	4x40mm
	E	PCS-005218	x 4	ϕ35x110x65mm

	REF	PCS	QTY	DIM
	F	PCS-006057	x 28	3.5x12mm
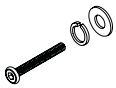	G	PCS-006058	x 8	6x40mm
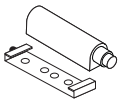	H	PCS-005192	x 2	770/12x29.5mm
	I	PCS-005219	x24	3.5x14mm
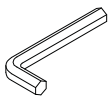	J	PCS-006100	x1	M4
	K	PCS-006059	x 35	3x25mm
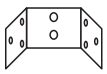	L	PCS-006060	x 4	120x52x32mm
	M	PCS-005196	x2	3.5x14mm
	N	PCS-006061	x2	90x15x2mm
	O	PCS-006062	x2	ϕ6x30mm

	REF	PCS	QTY	DIM
	P	BC: PCS-008163 BF: PCS-005197	x18	ϕ 21mm

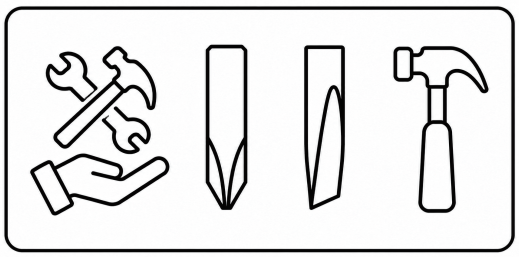

1.

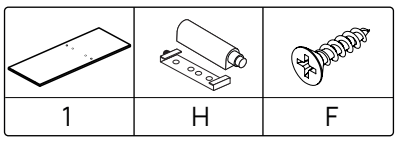

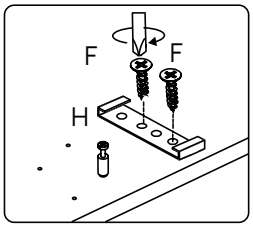

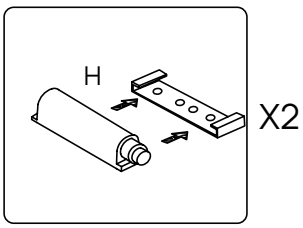

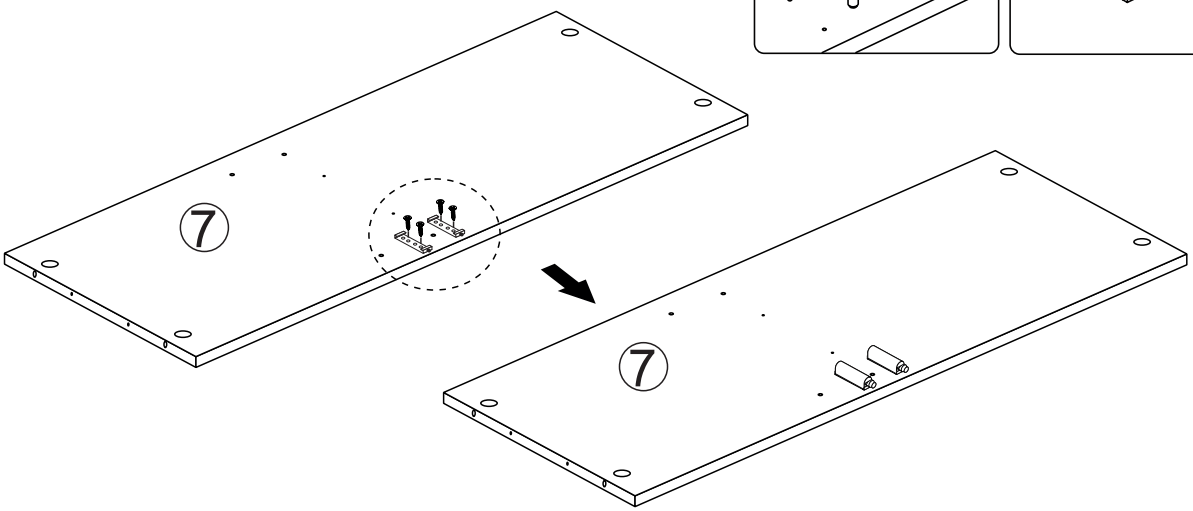

2.

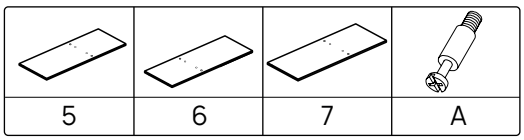

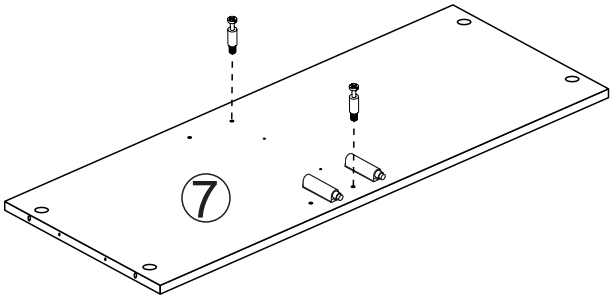

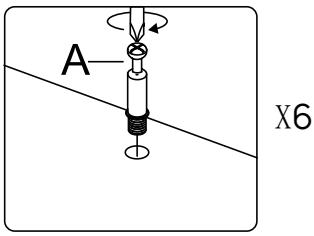

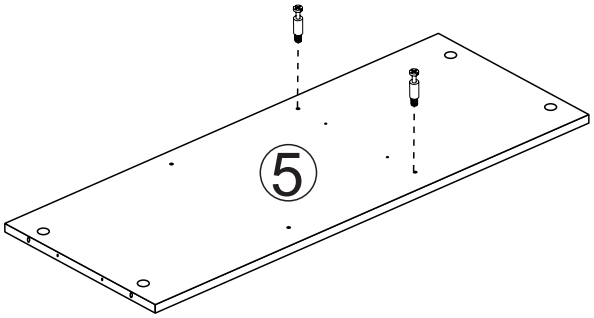

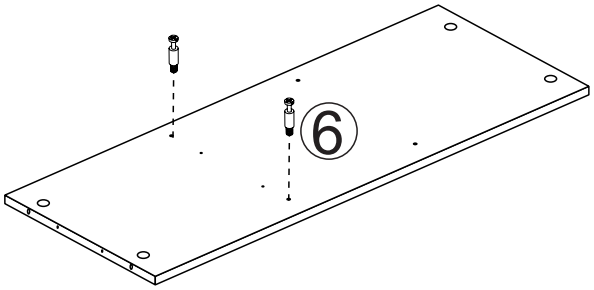

3.

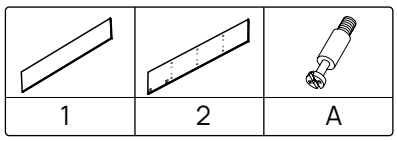

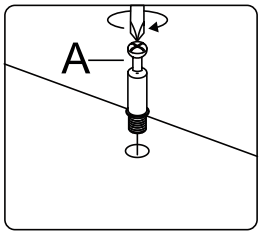

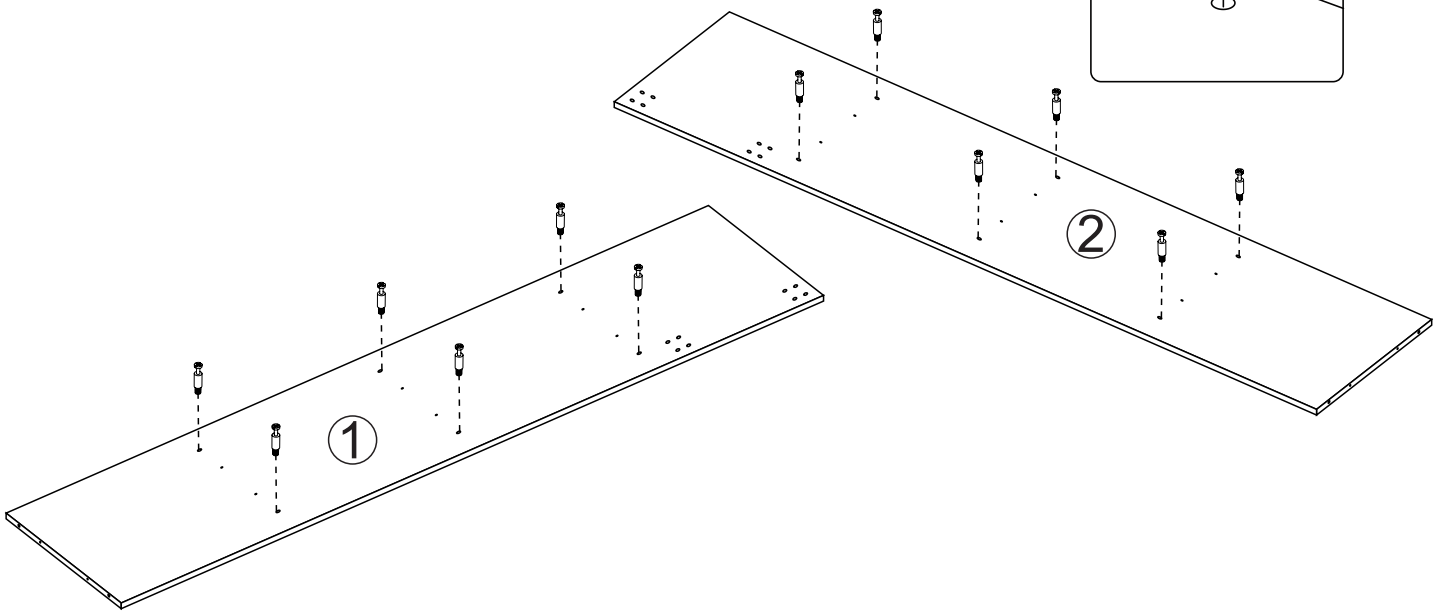

4.

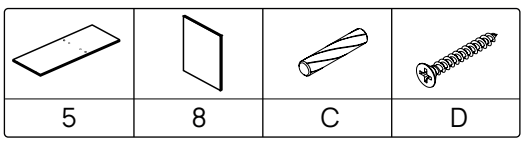

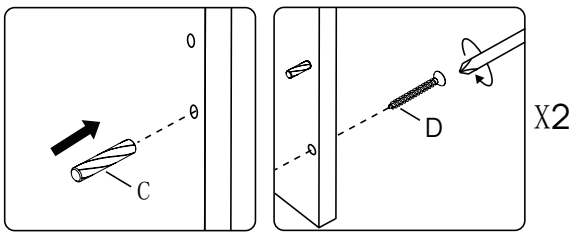

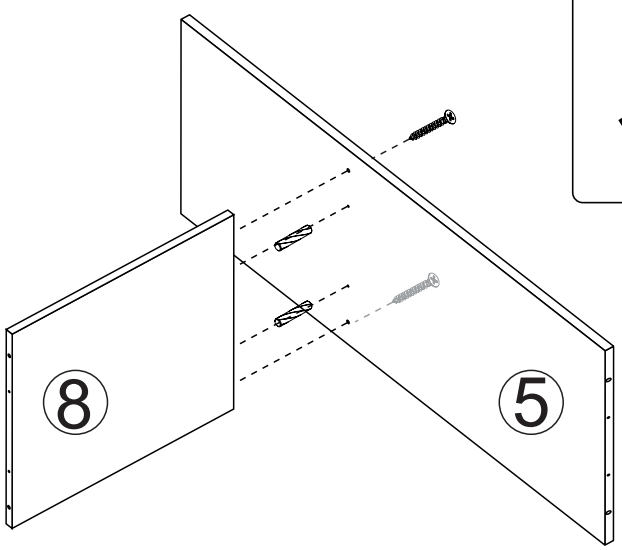

5.

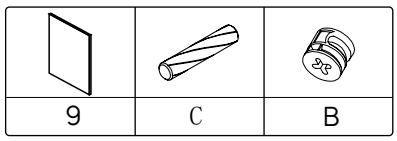

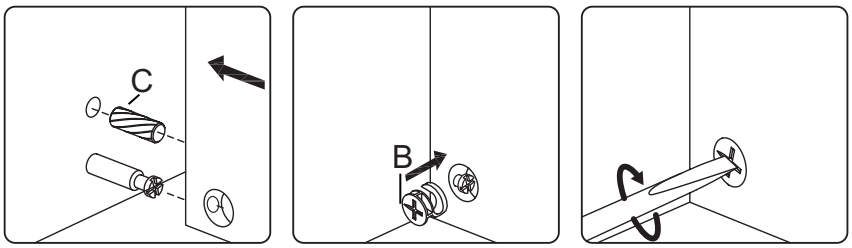

x2

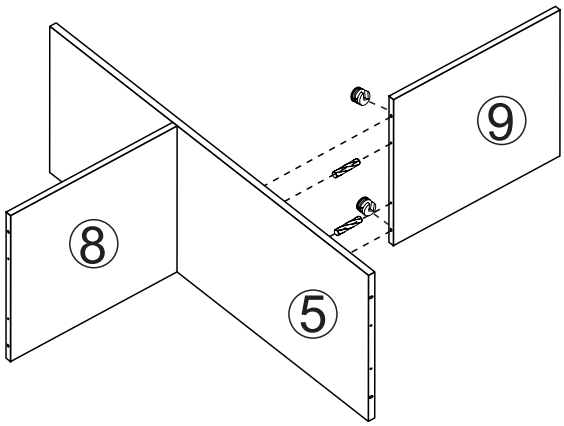

6.

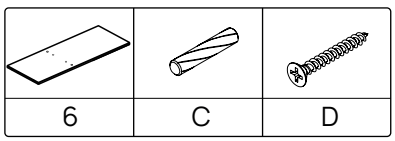

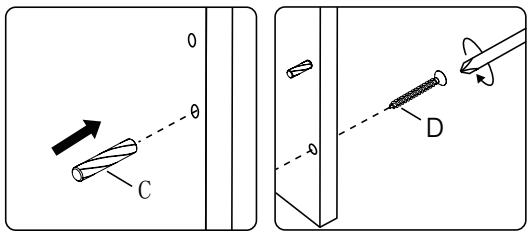

X2

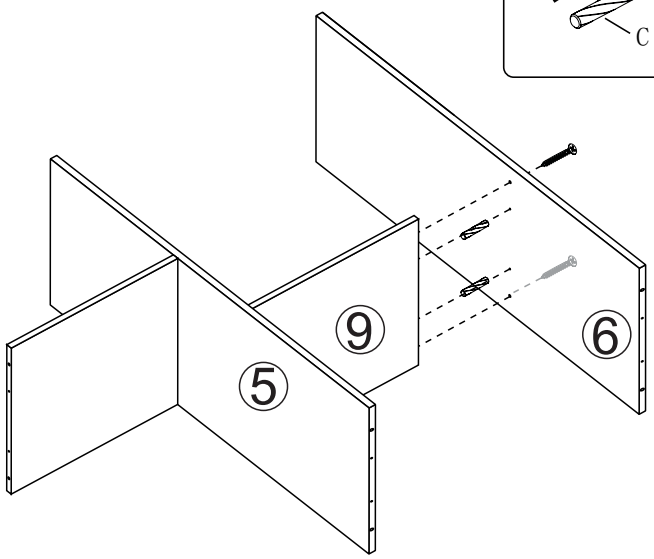

7.

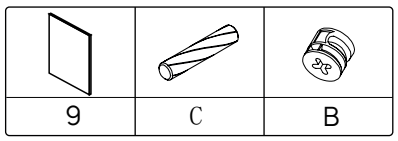

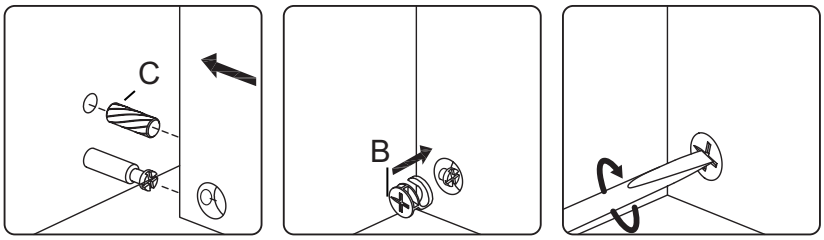

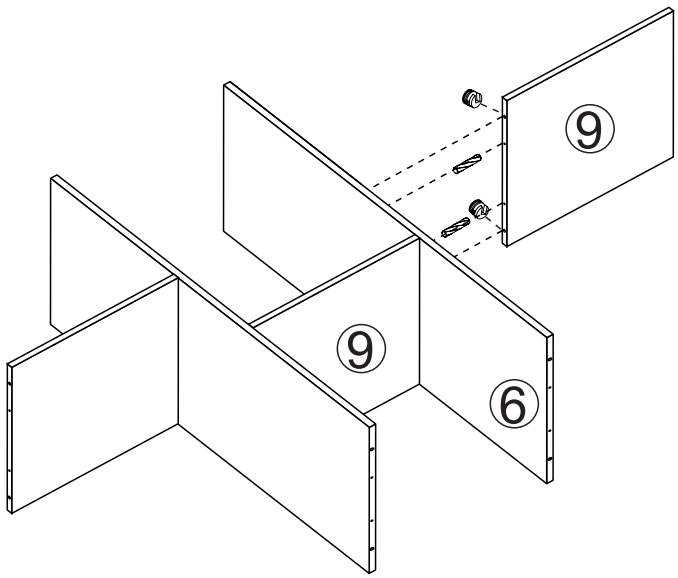

8.

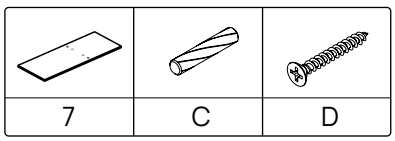

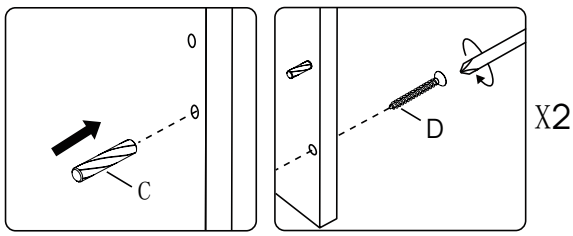

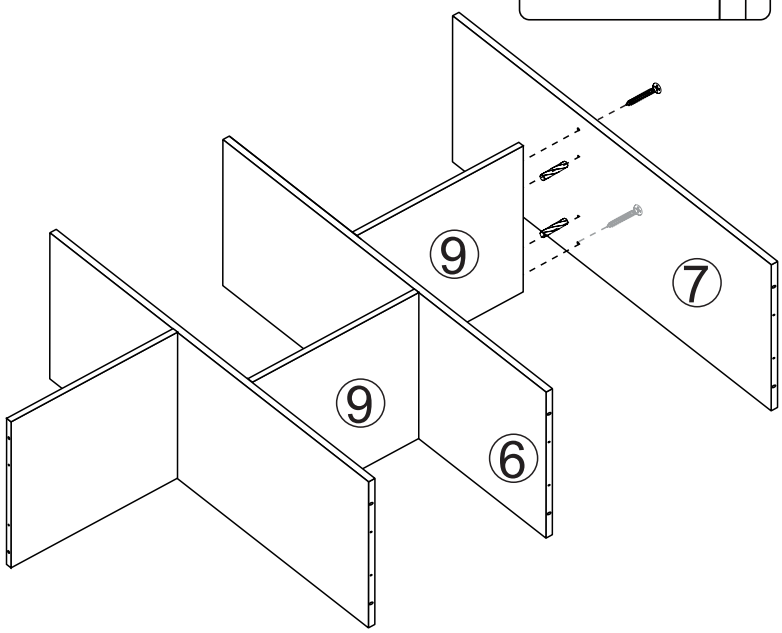

9.

13	C	B

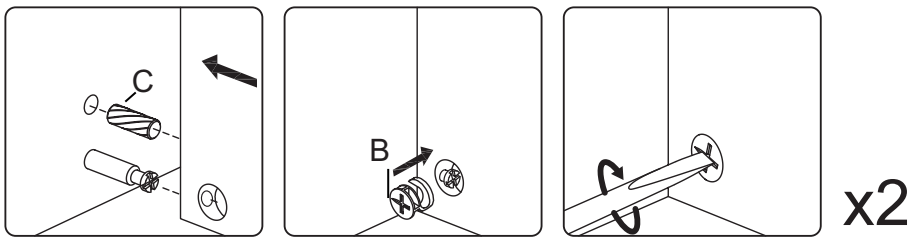

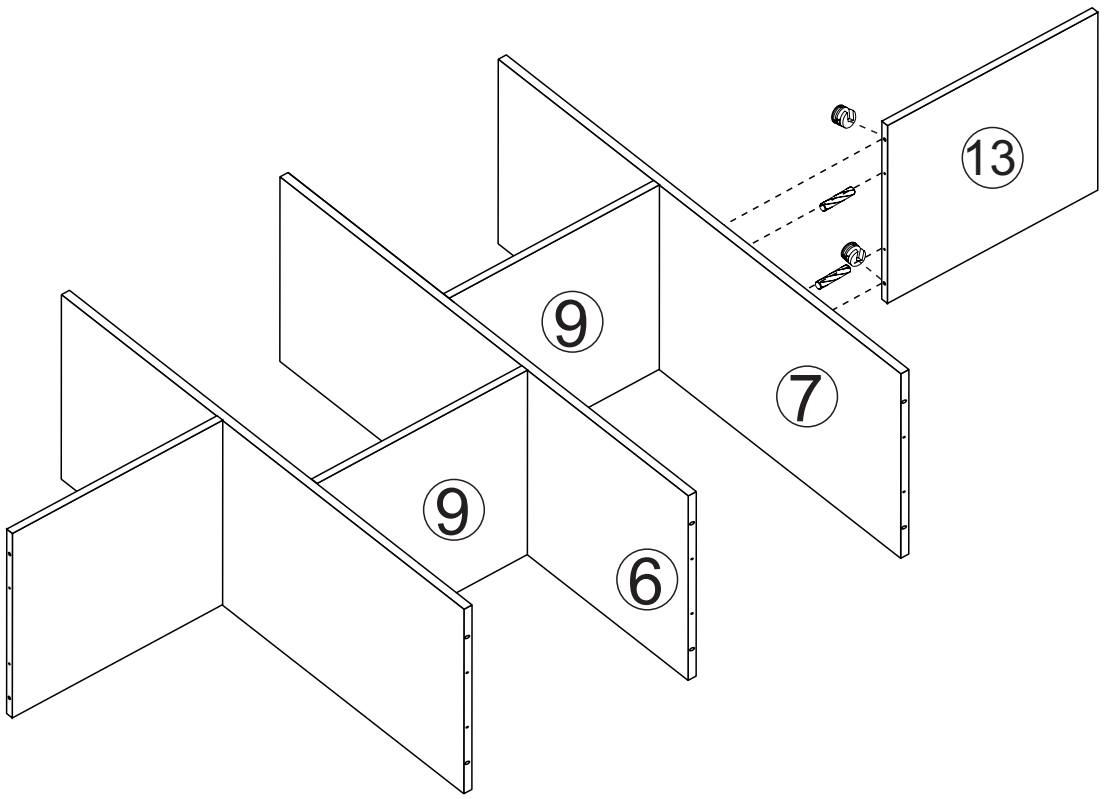

10.

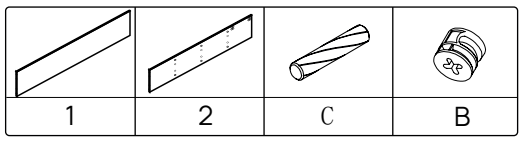

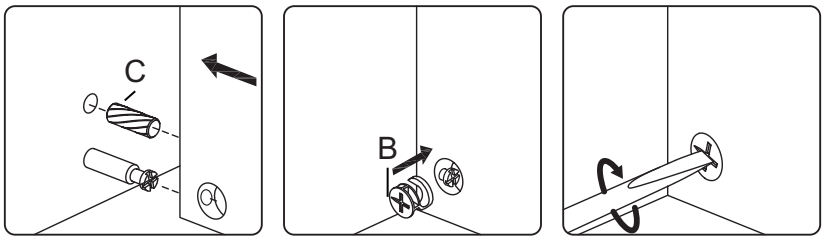

x12

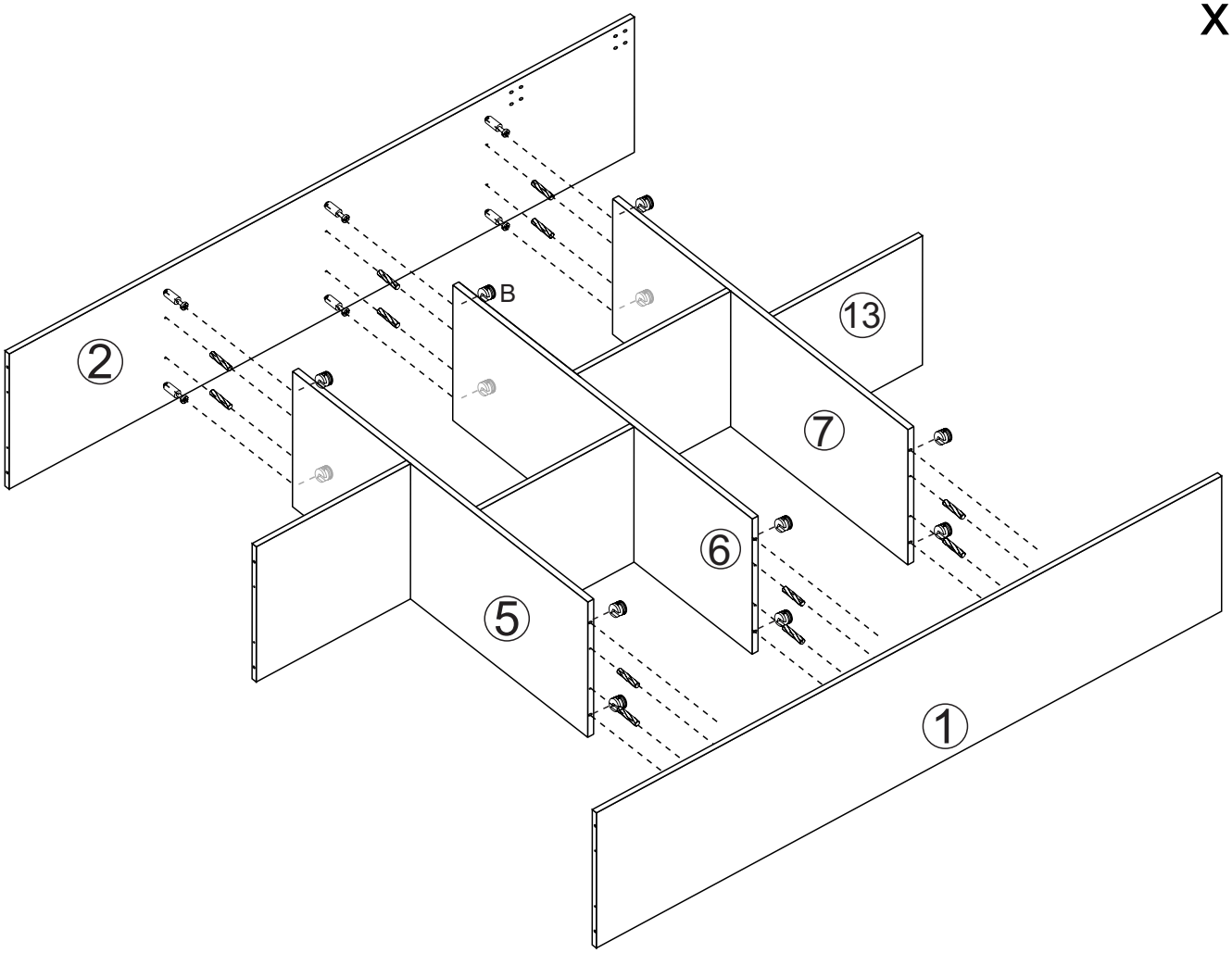

11.

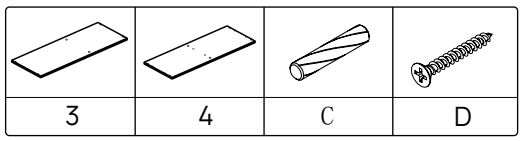

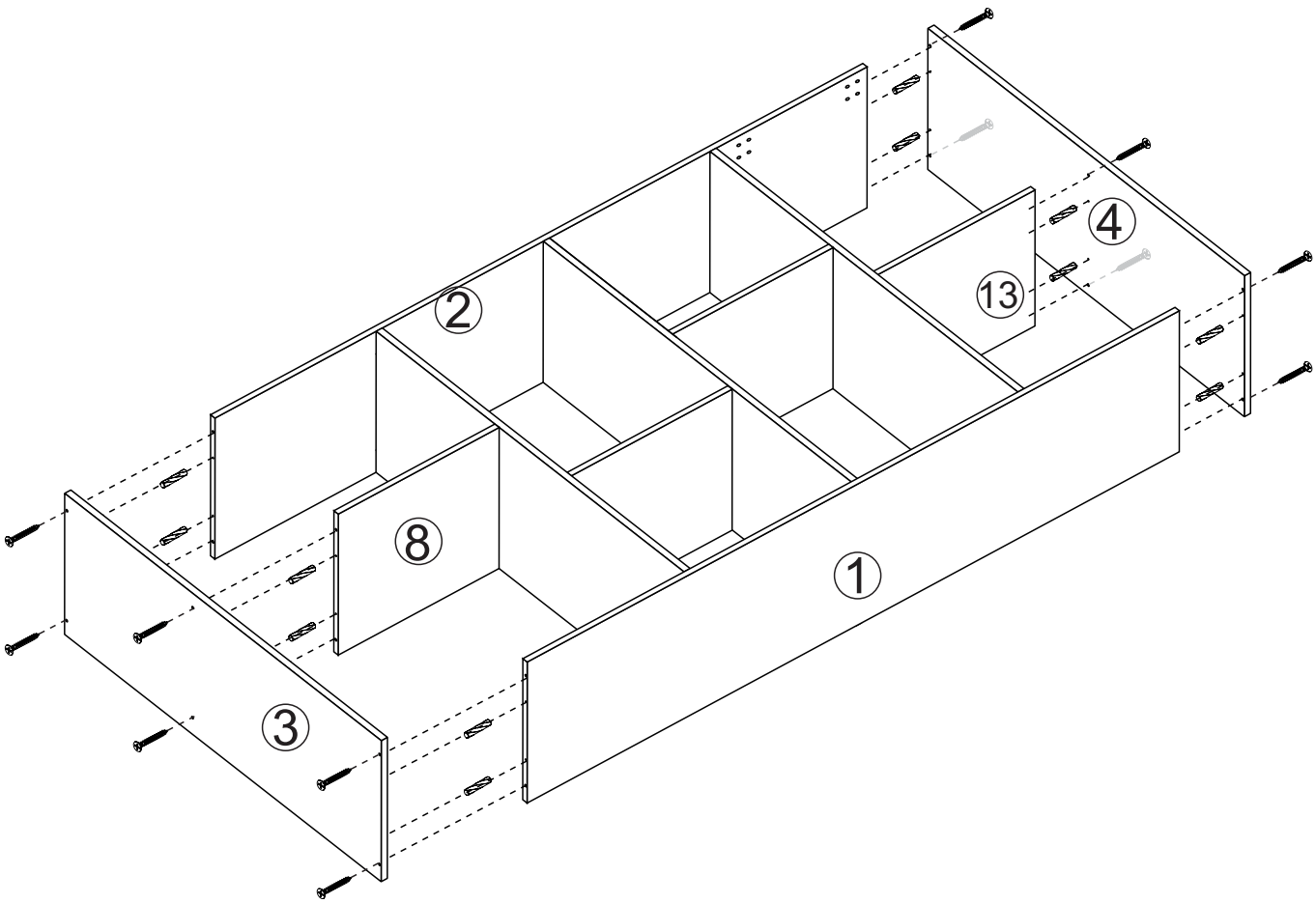

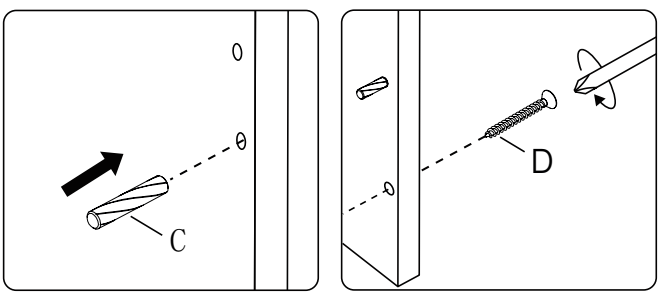

x12

12.

11	12	C

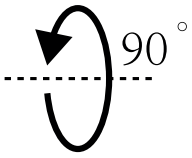

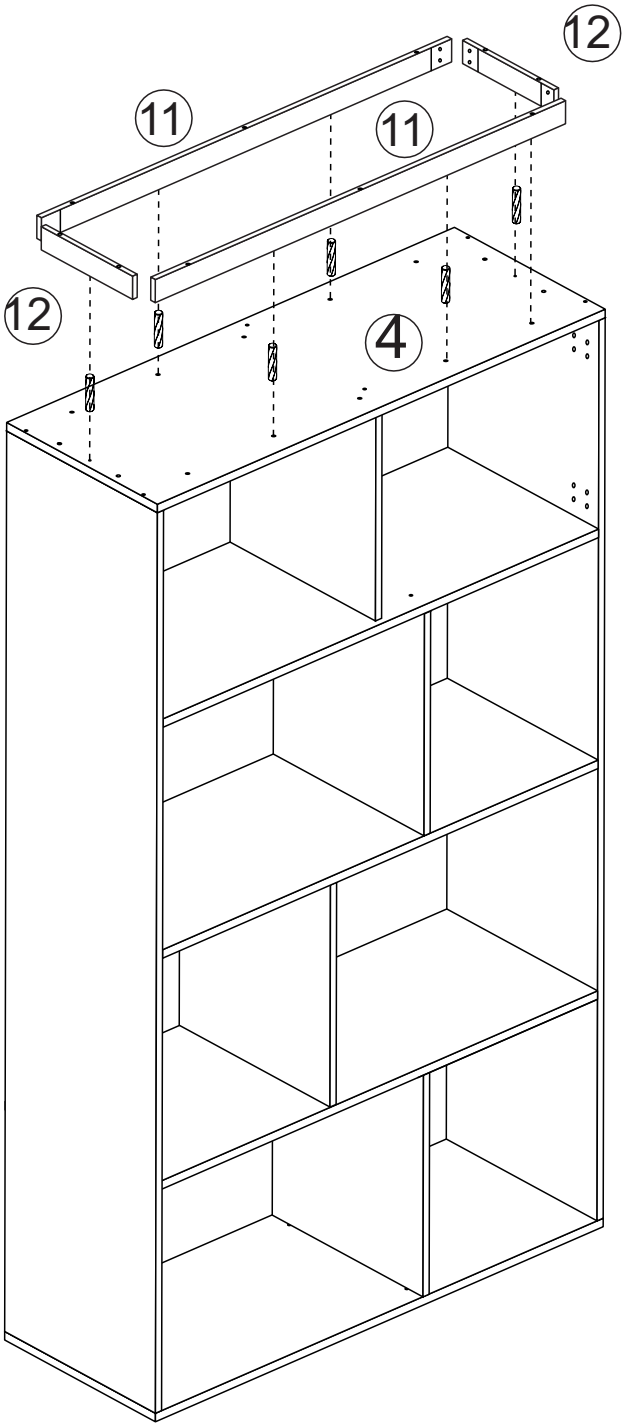

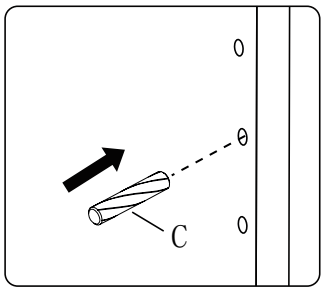

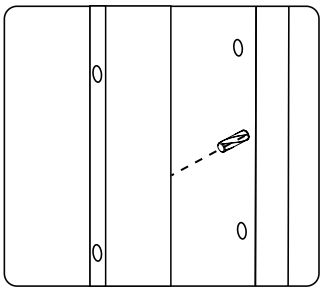

X6

13.

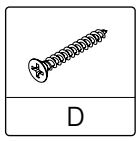

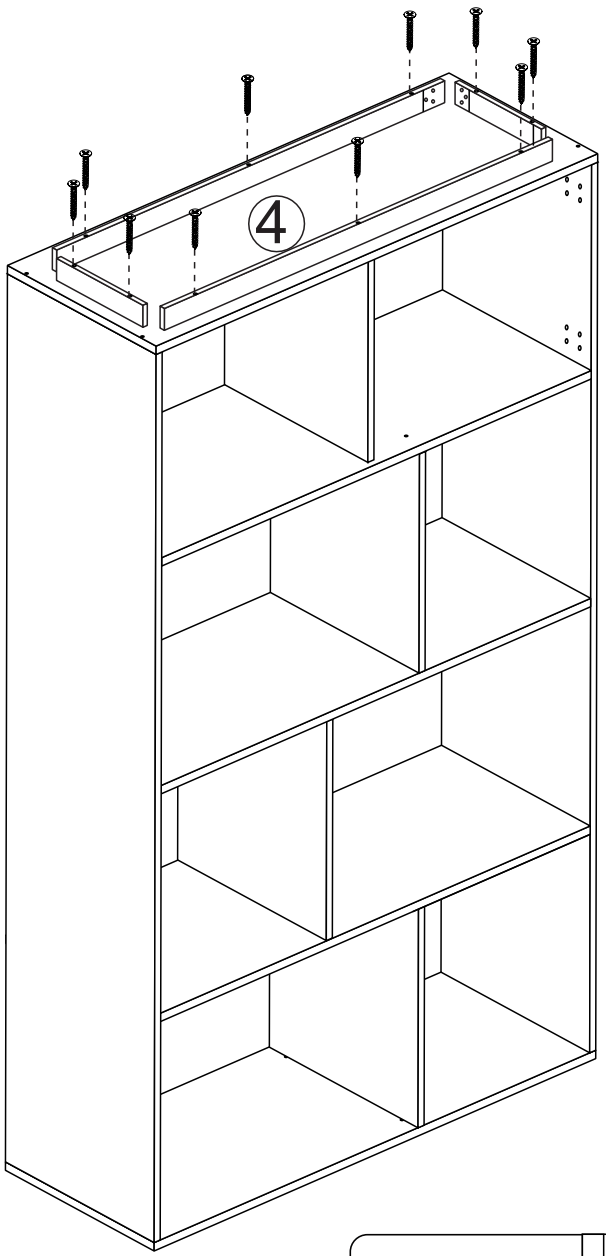

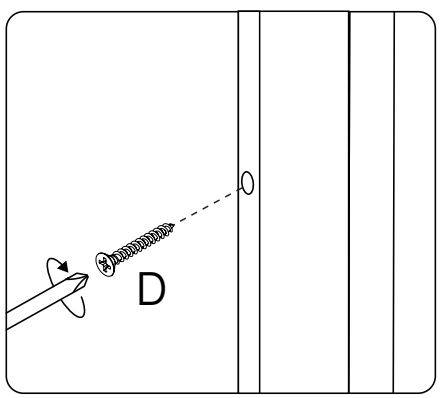

x10

14.

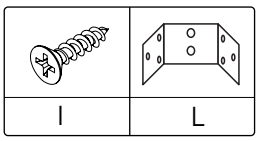

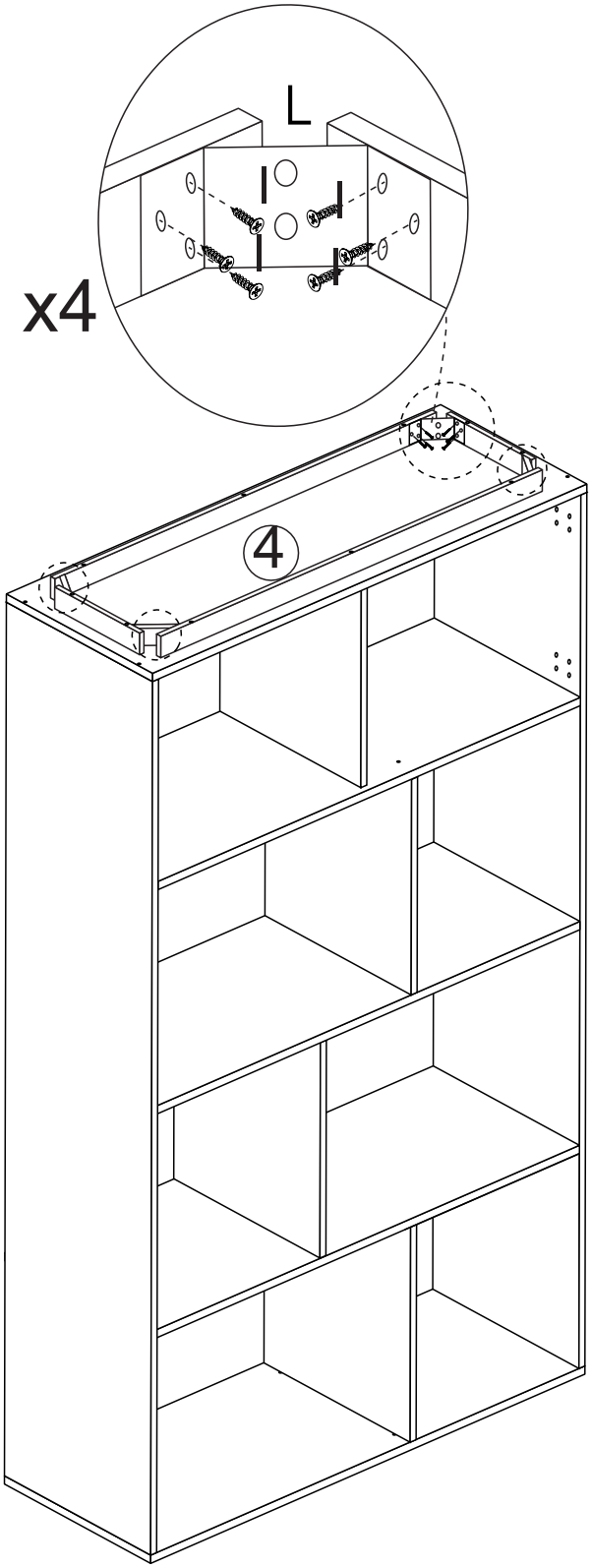

15.

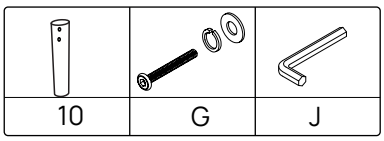

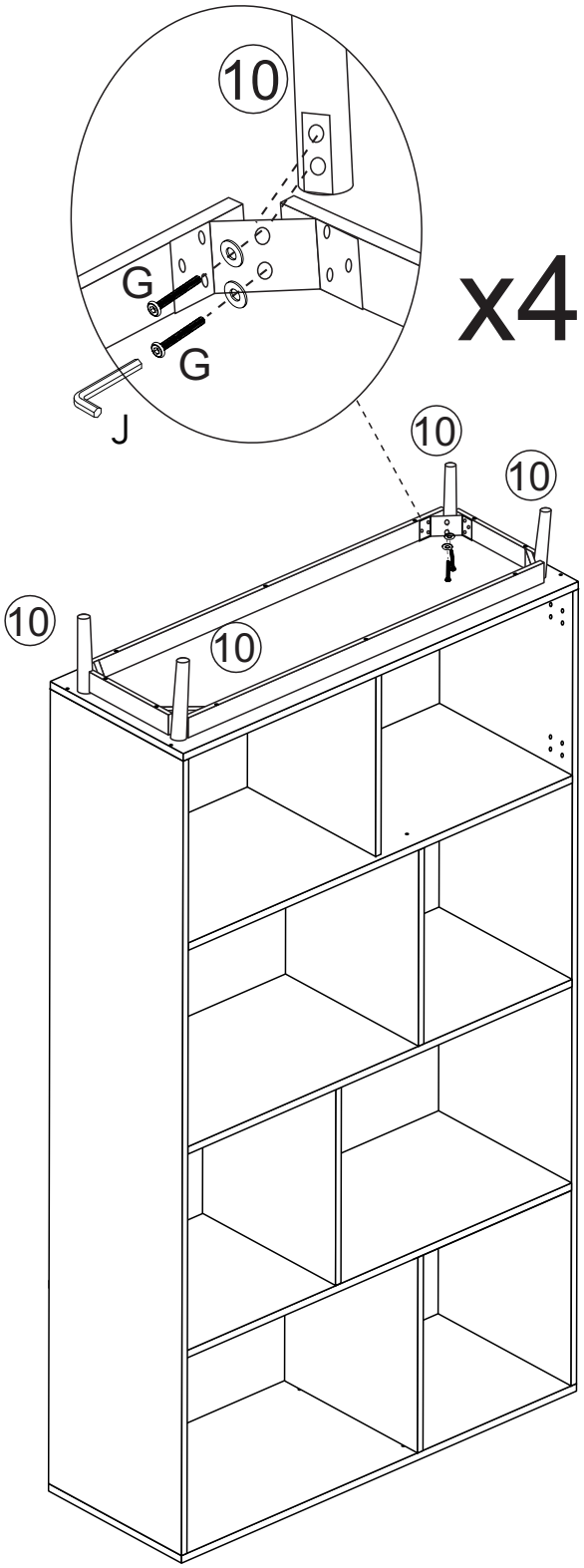

16.

16	17	E	F

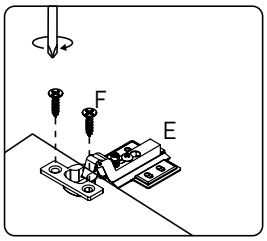

X4

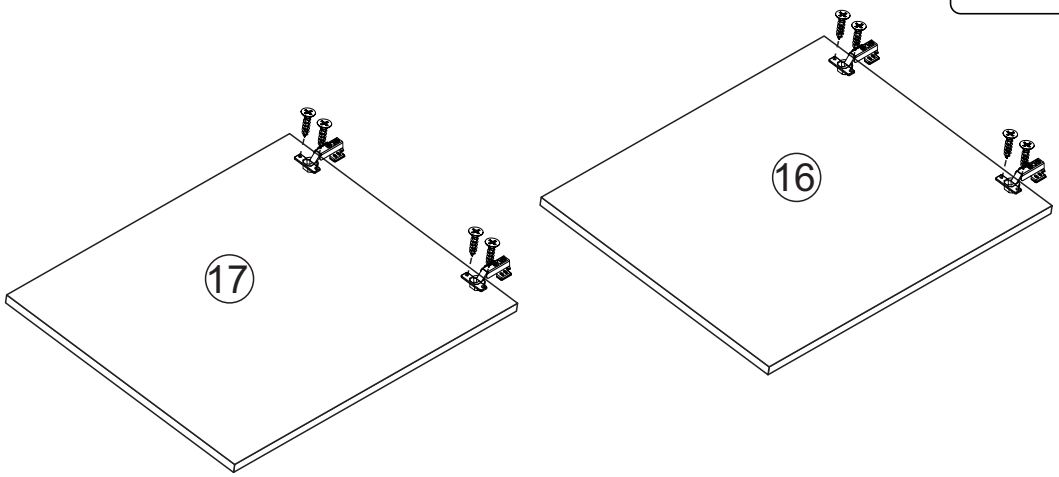

17.

16	17	F

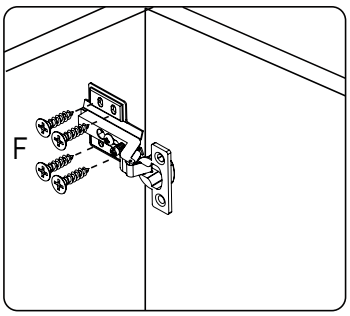

X4

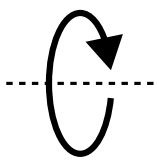

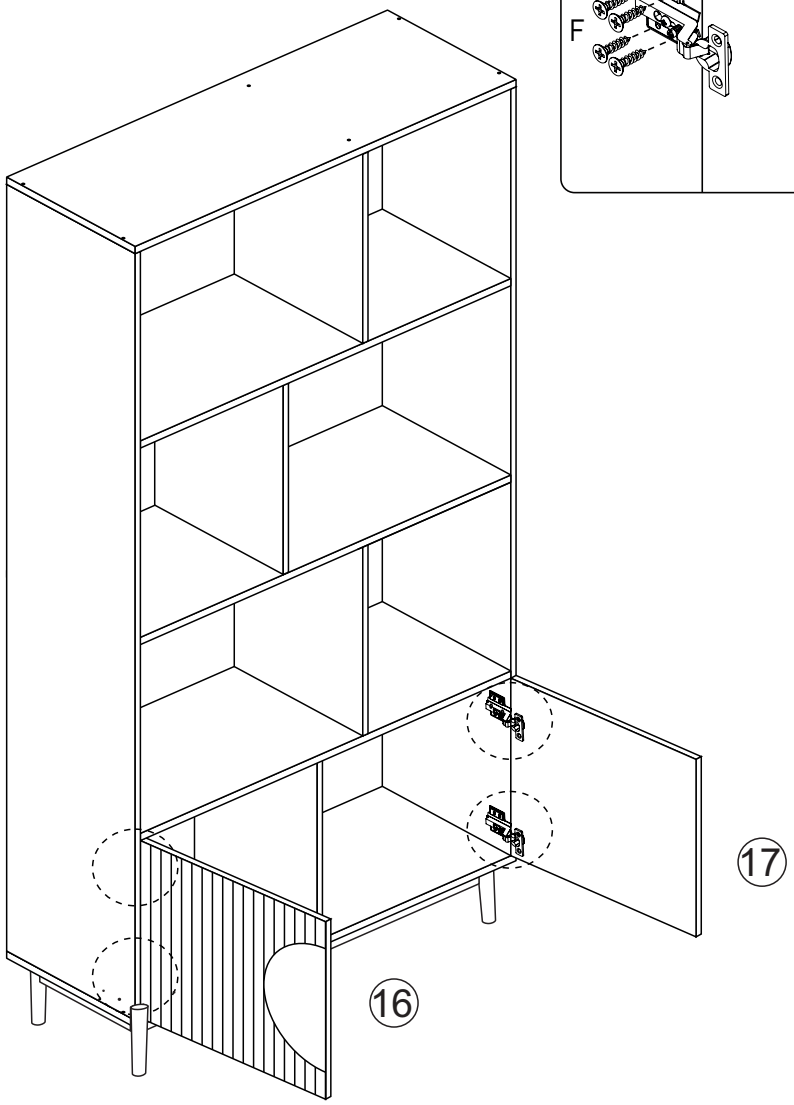

18.

14	15	K

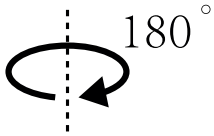

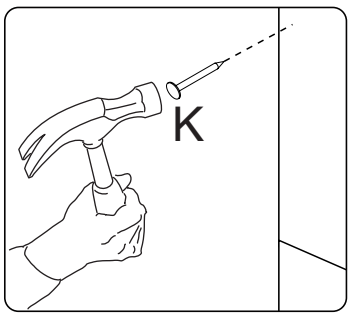

x35

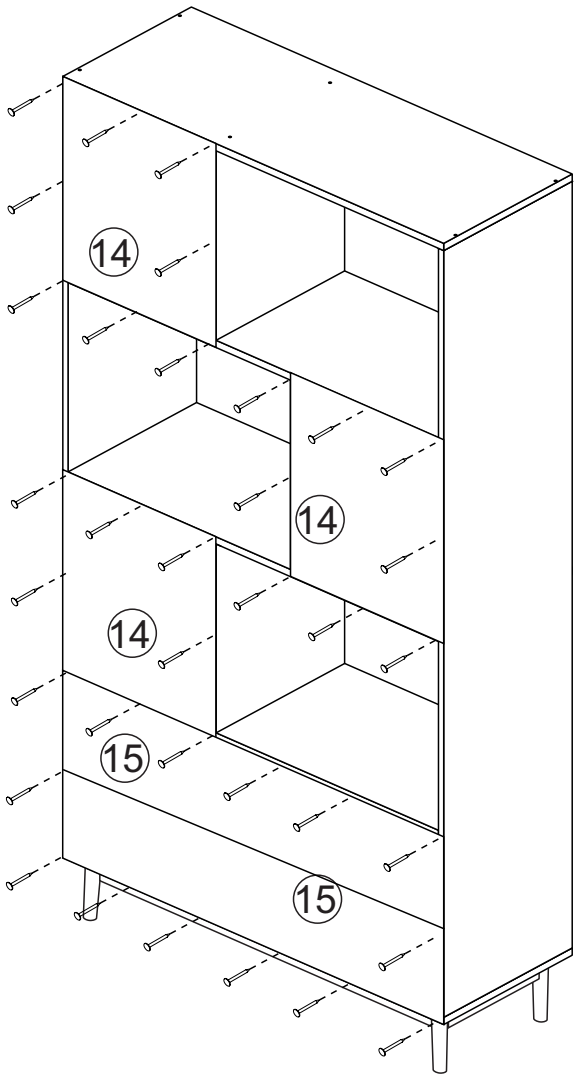

19.

M	N

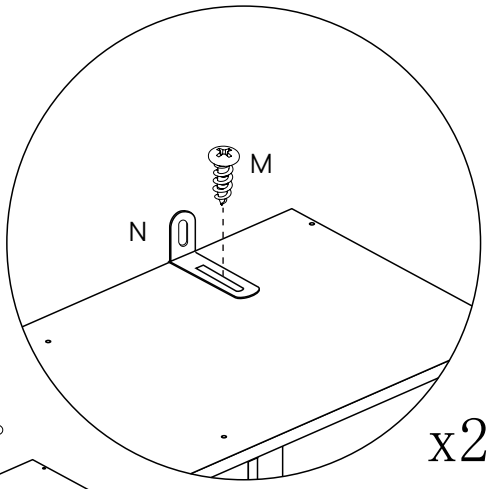

x2

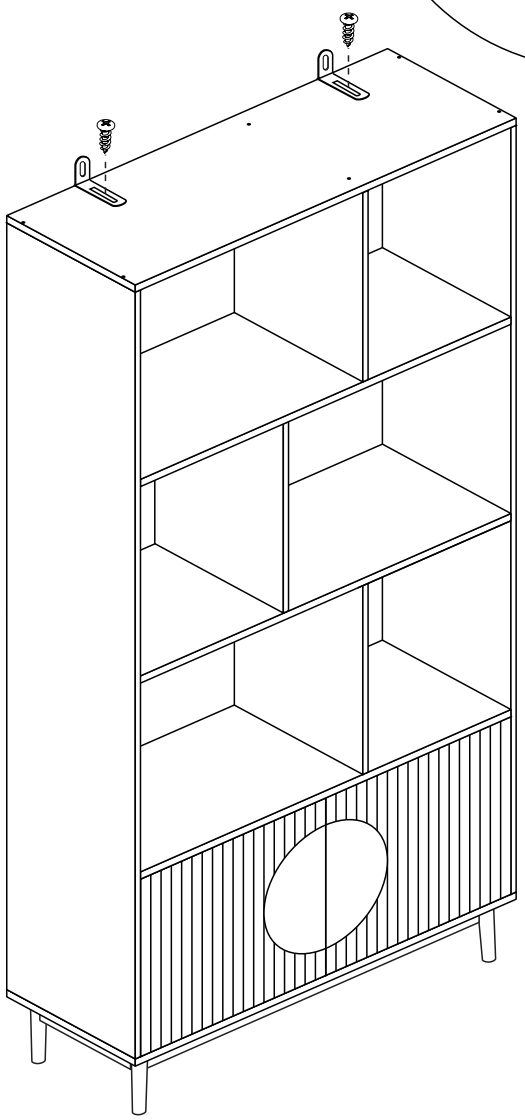

20.

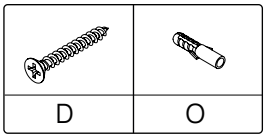

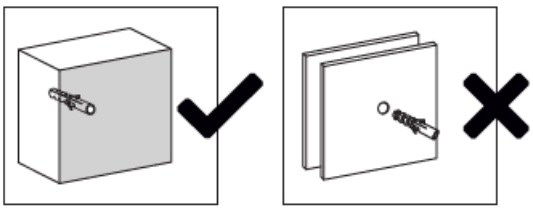

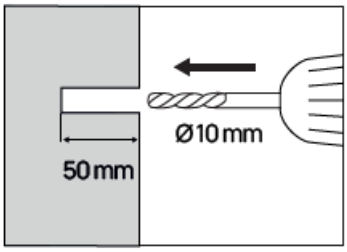

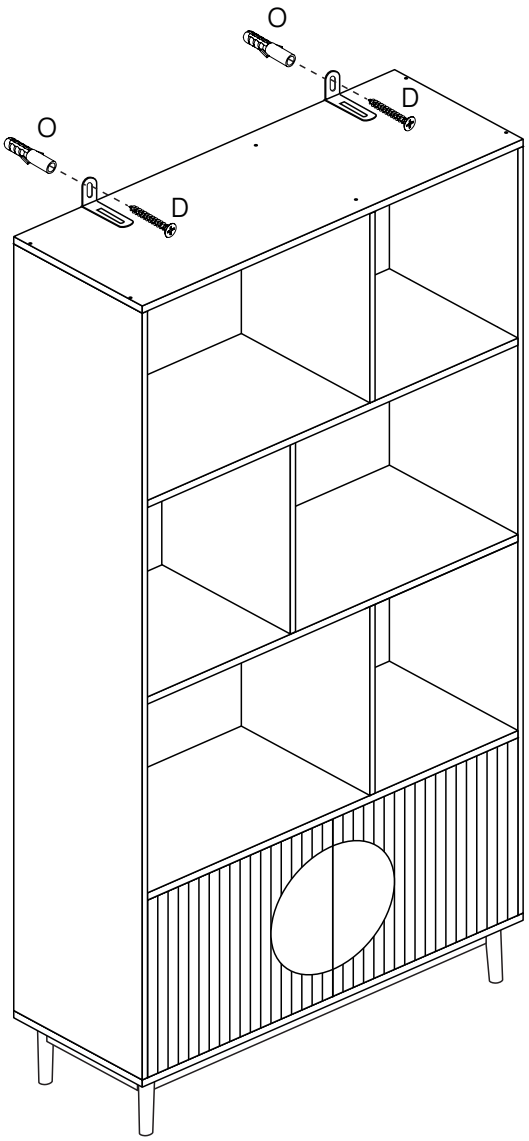

21.

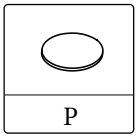

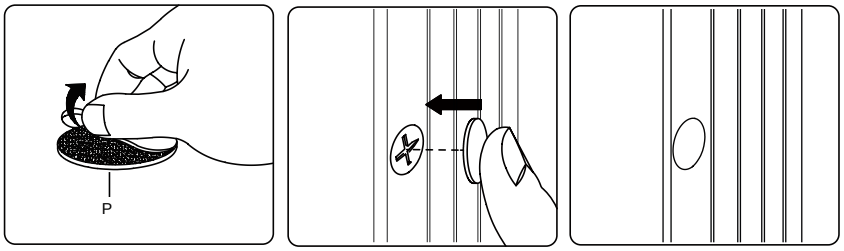

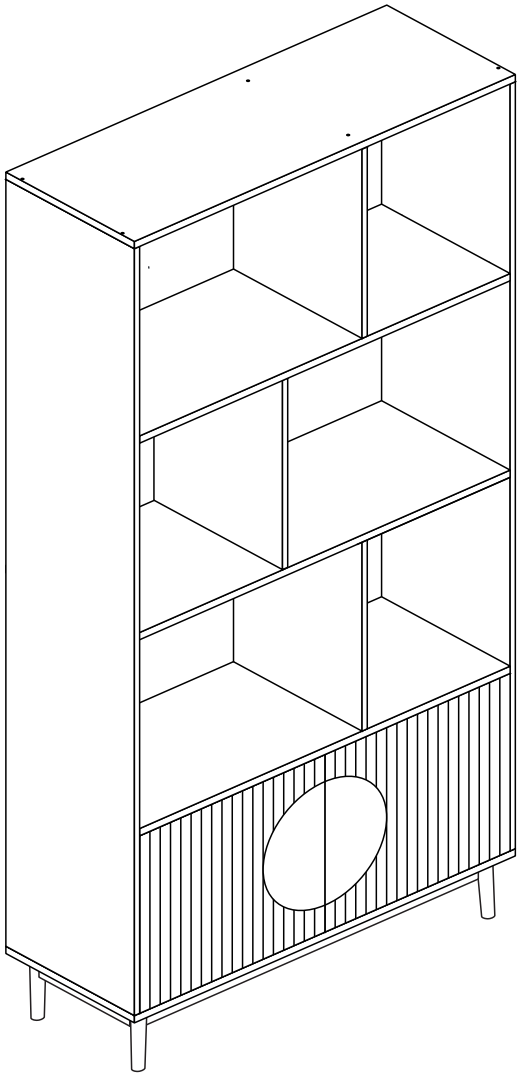

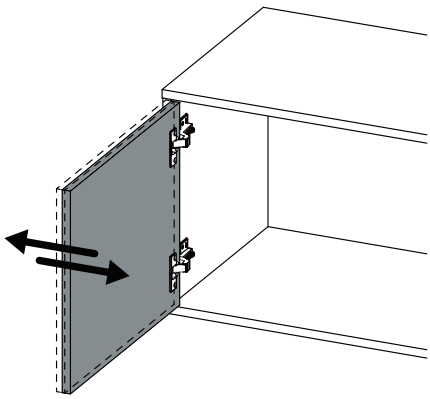

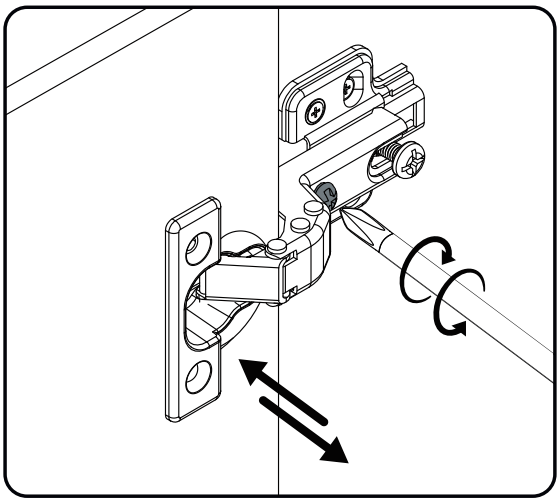

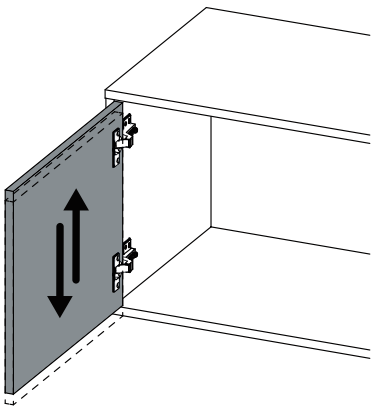

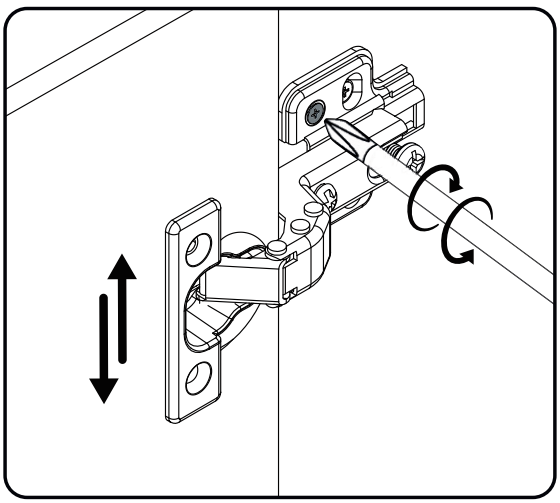

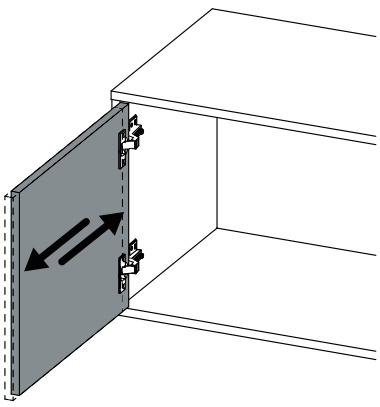

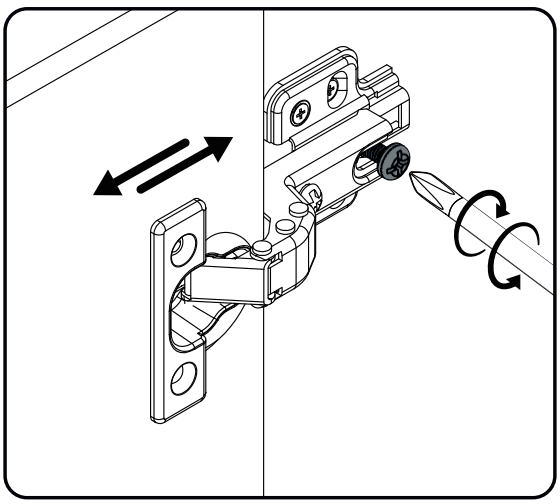

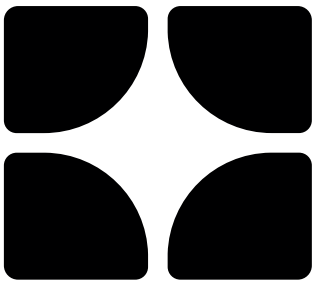

Montez, installez, détendez-vous!

SICAAN.