MOONIE

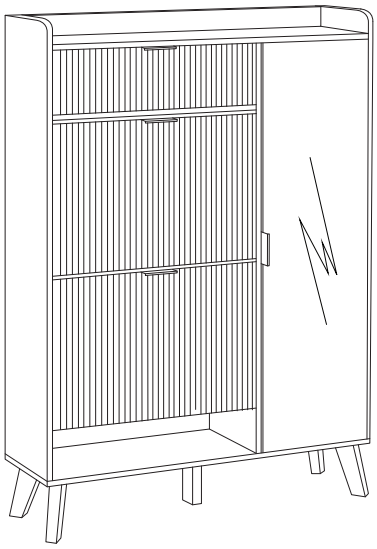

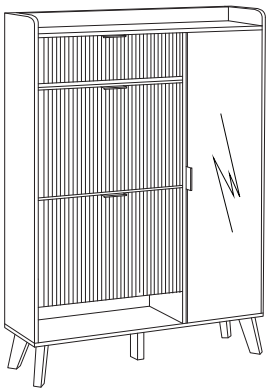

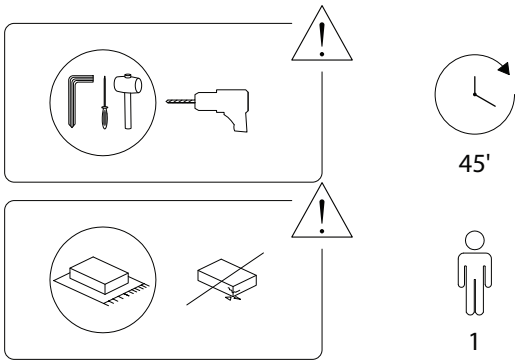

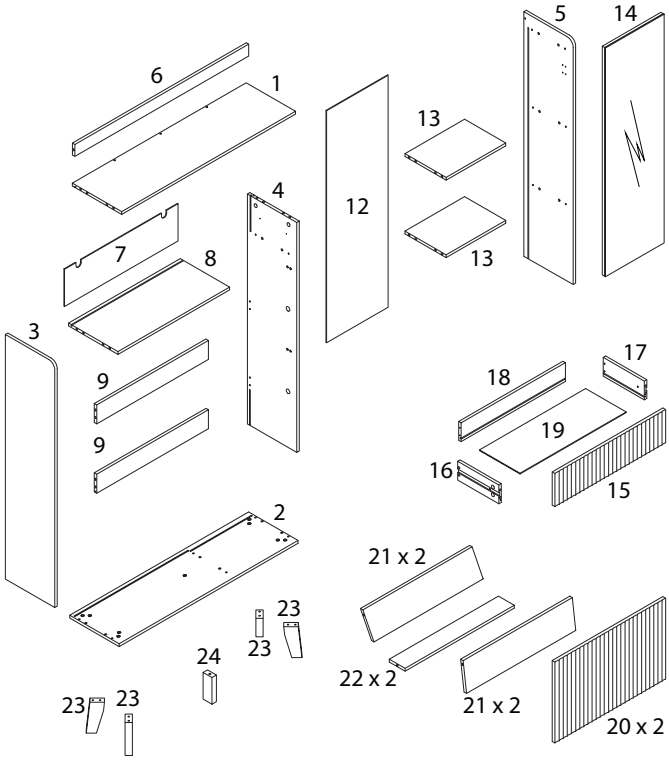

1	2	3	4	5
x 1	x 1	x 1	x 1	x 1

6	7
x 1	x 1

8	9	12	13
x 1	x 1	x 1	x 2

14	15	16	17
x 1	x 1	x 1	x 1

18	19	20	21
x 1	x 1	x 2	x 4

22	23	24	A
x 2	x 4	x 1	x 32

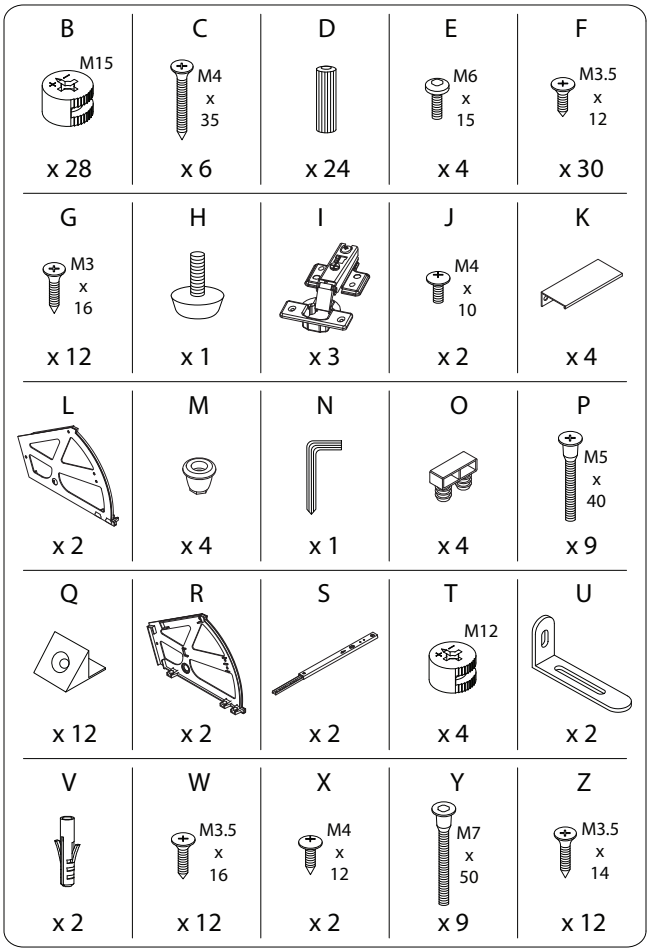
B
M15
x 28
C
M4 x 35
x 6
D
x 24
E
M6 x 15
x 4
F
M3.5 x 12
x 30
G
M3 x 16
x 12
H
x 1
I
x 3
J
M4 x 10
x 2
K
x 4
L
x 2
M
x 4
N
x 1
O
x 4
P
M5 x 40
x 9
Q
x 12
R
x 2
S
x 2
T
M12
x 4
U
x 2
V
x 2
W
M3.5 x 16
x 12
X
M4 x 12
x 2
Y
M7 x 50
x 9
Z
M3.5 x 14
x 12

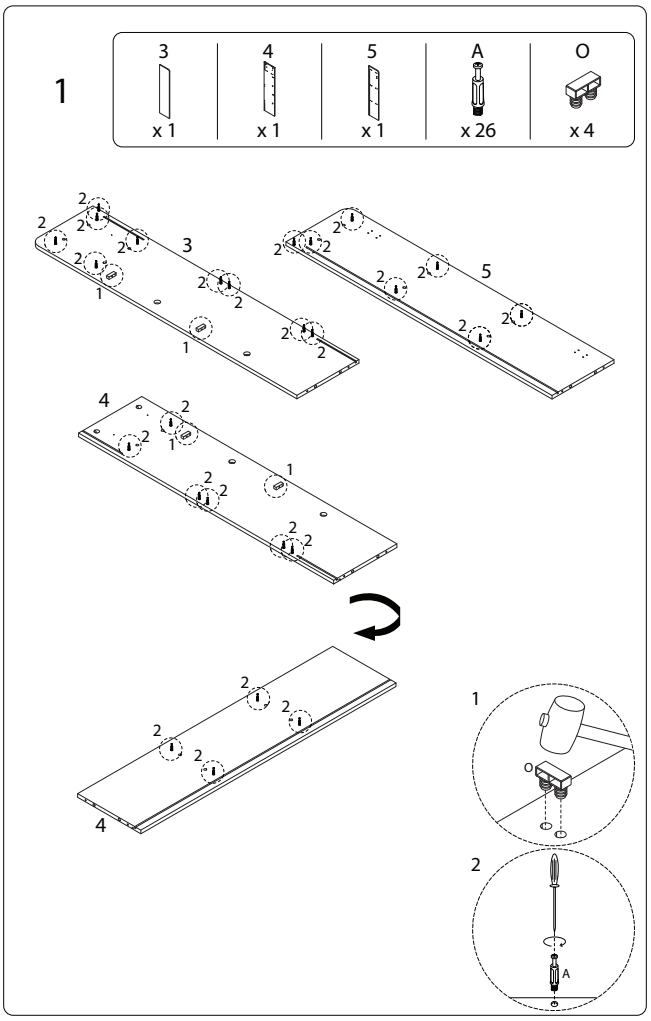
1
3
x 1
4
x 1
5
x 1
A
x 26
O
x 4
3
5
4
1
2
A
O

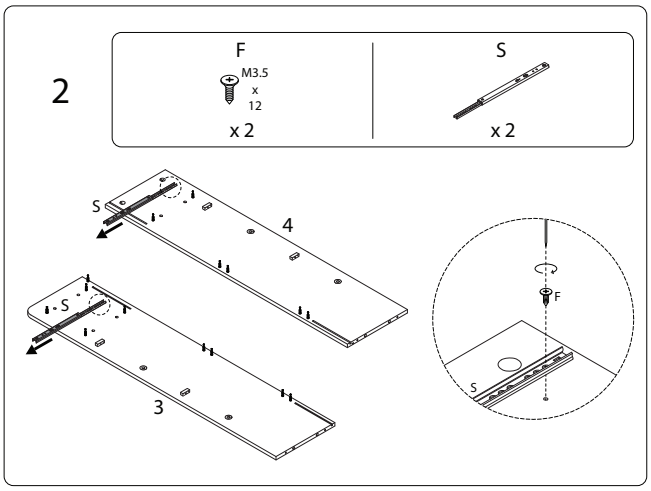
2
F
M3.5 x 12
x 2
S
x 2
S
4
3
F

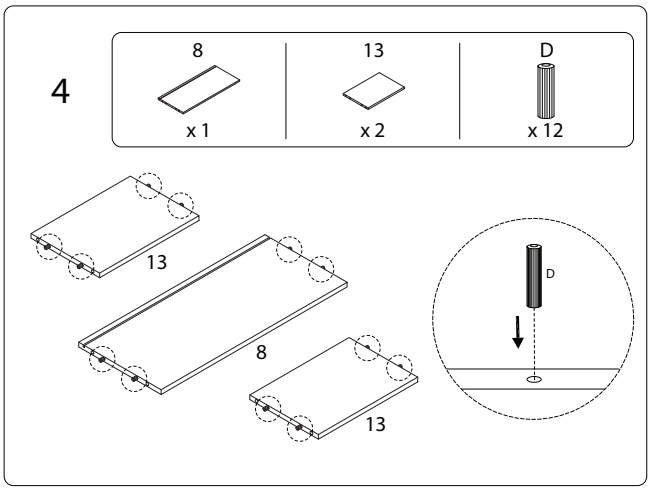
4
8
x 1
13
x 2
D
x 12
13
8
13
D

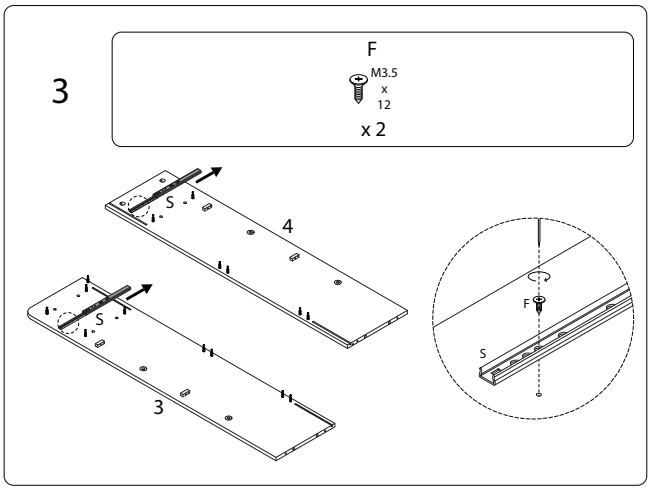
3
F
M3.5 x 12
x 2
S
4
3
F

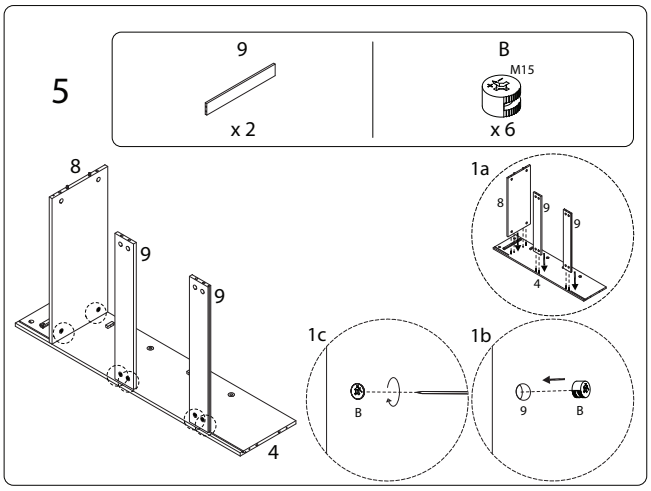
5
9
x 2
B
M15
x 6
8
9
9
4
1a
1c
1b
B
9
B

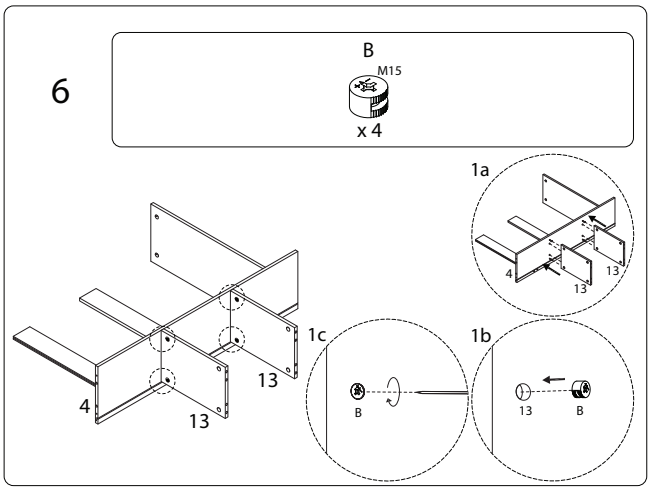
6
B
M15
x 4
1a
4
13
13
1c
1b
B
13
B
4
13
13

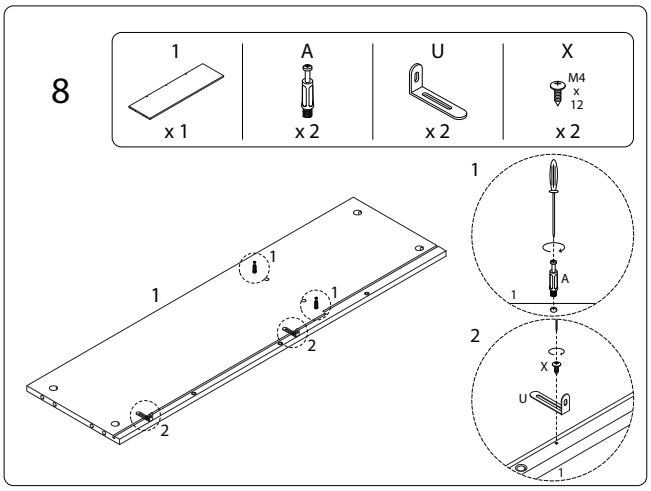
8
1
x 1
A
x 2
U
x 2
X
M4
x
12
x 2
1
1
1
1
2
2
1
A
1
2
X
U
1

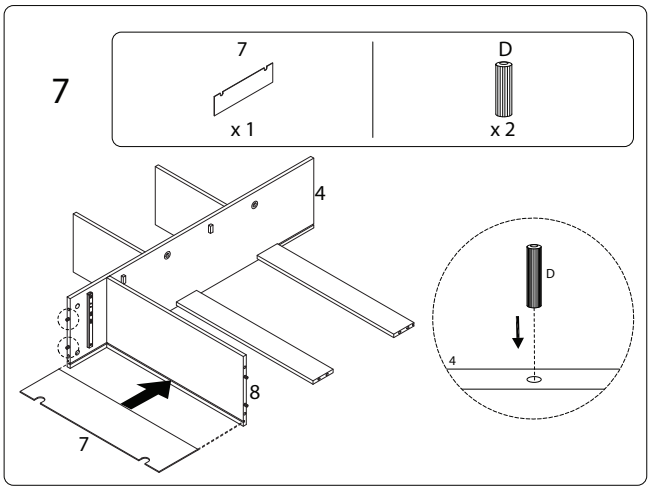
7
7
x 1
D
x 2
4
D
4
8
7

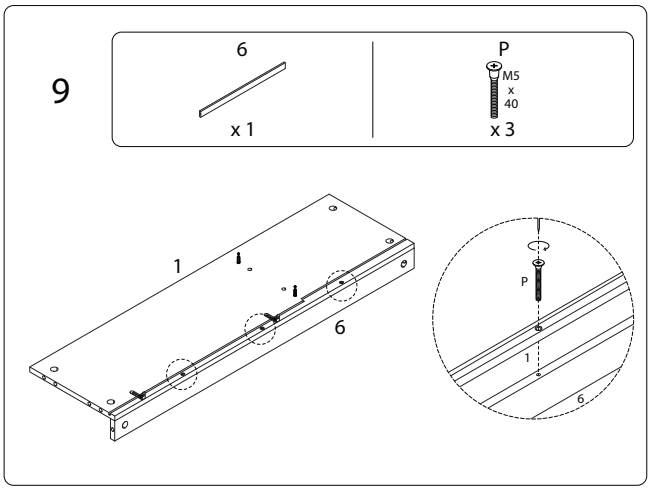
9
6
x 1
P
M5
x
40
x 3
1
6
P
1
6

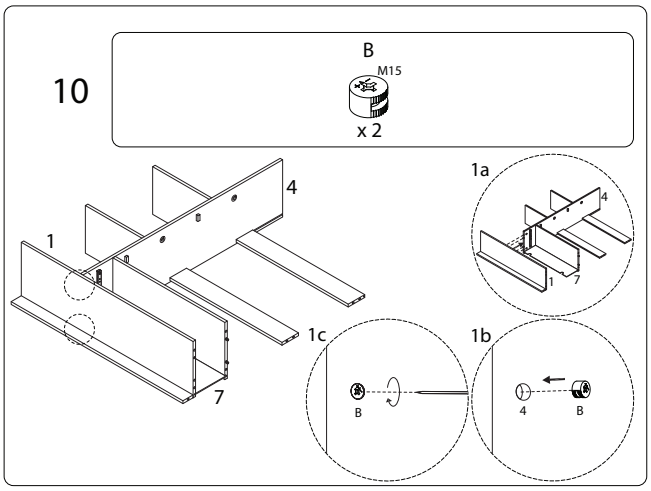
10
B
M15
x 2
4
1
1a
4
1
7
7
1c
1b
B
4
B

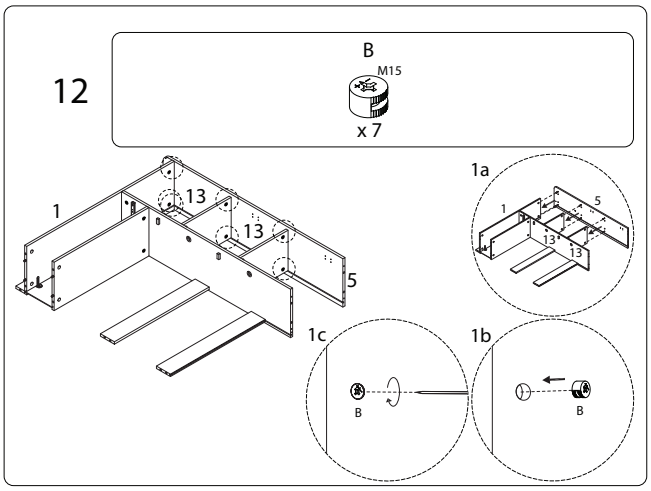
12
B
M15
x 7
1
13
13
5
1a
1
5
13
13
1c
1b
B
B

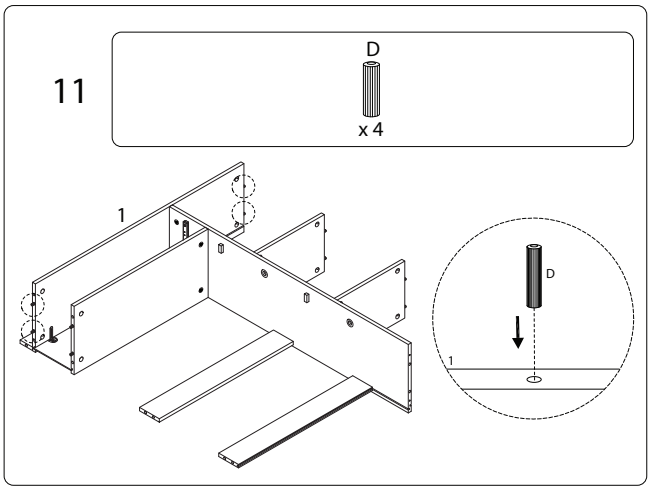
11
D
x 4
1
D
1

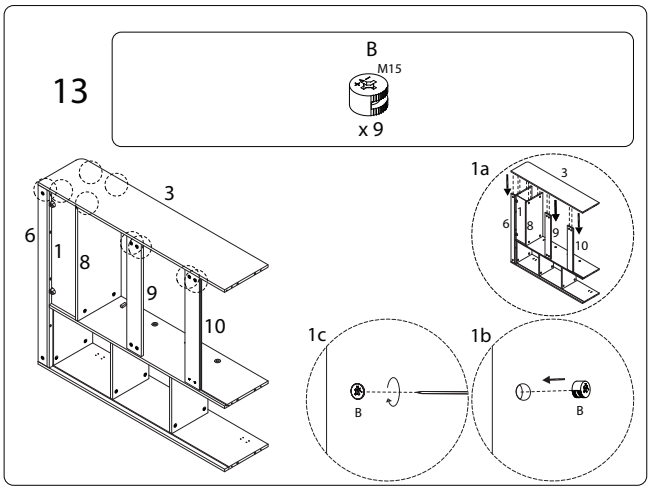
13
B
M15
x 9
3
6
1
8
9
10
1a
3
6
8
9
10
1c
1b
B
B

14

2	23	24	H	N	Y
x 1	x 4	x 1	x 1	x 1	M7 x 50 x 9

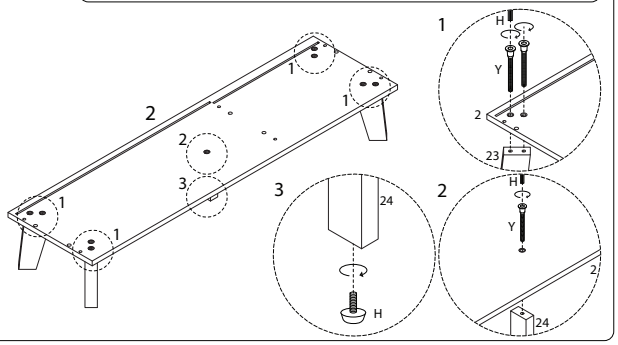

15

12	D
x 1	x 6

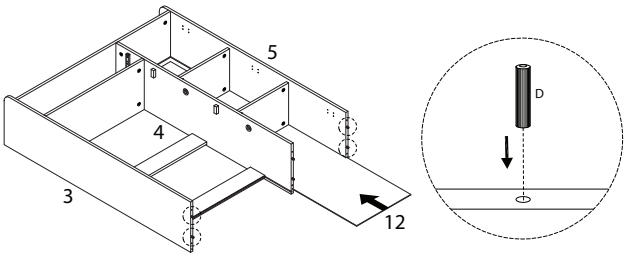

16

H	P
x 1	M5 x 40 x 6

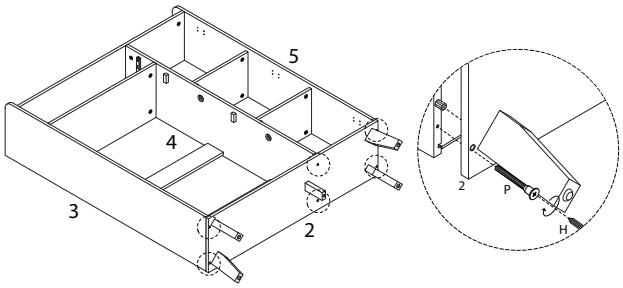

17

G	Q
M3 x 16 x 12	x 12

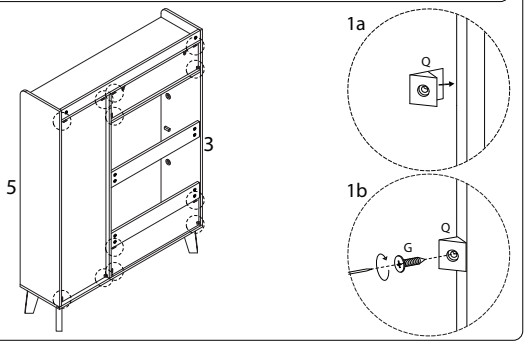

18

C	V
M4 x 35 x 2	x 2

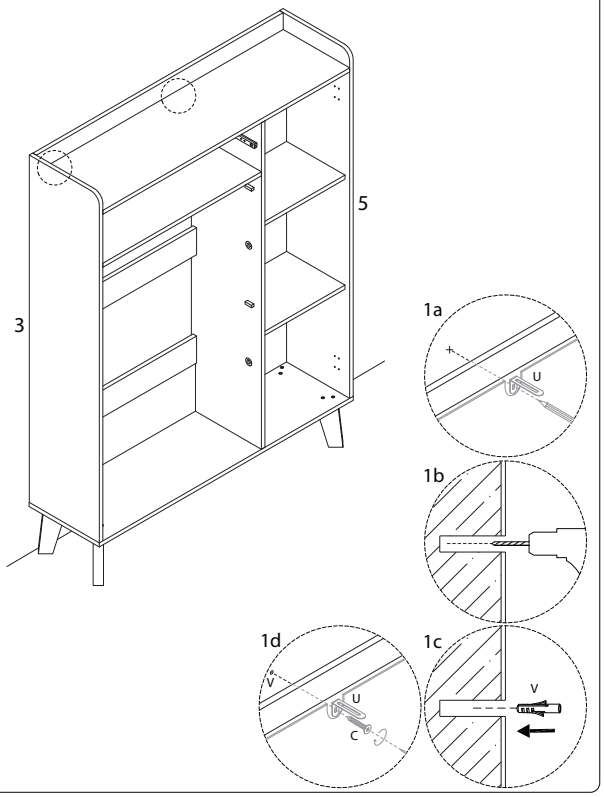

19

14	F	I	K
x 1	M3.5 x 12 x 8	x 3	x 1

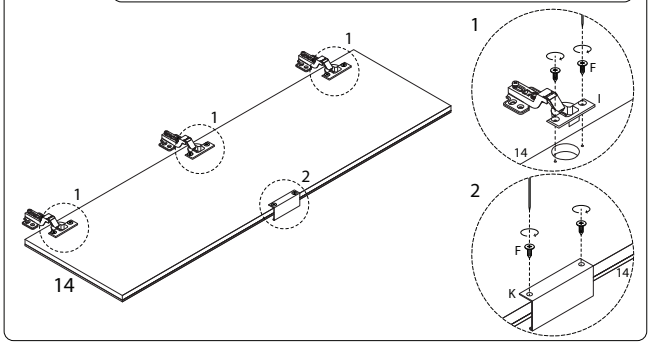

20

F
M3.5 x 12 x 12

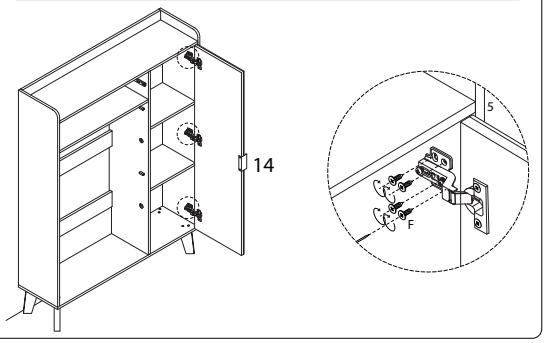

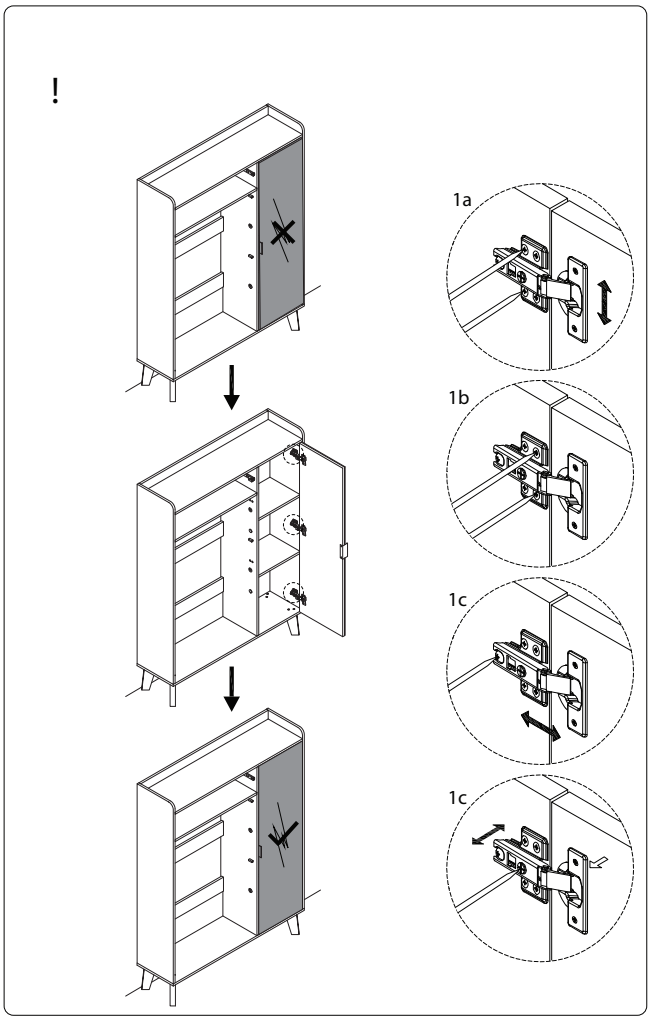
!
1a
1b
1c
1c

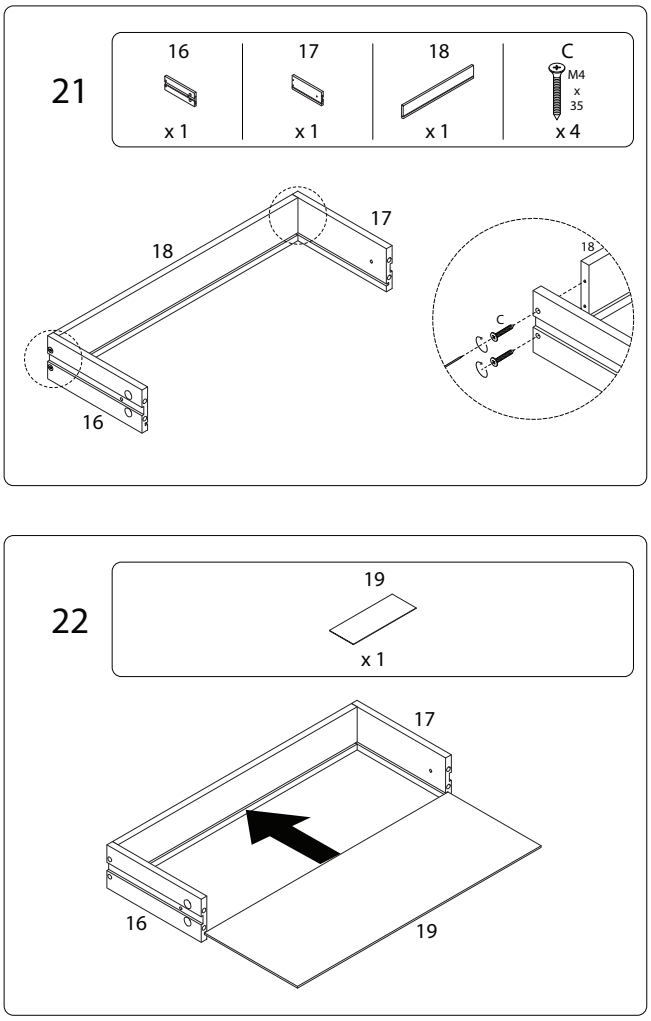
21
16
x 1
17
x 1
18
x 1
C
M4 x 35
x 4
18
17
16
18
C

22
19
x 1
17
16
19

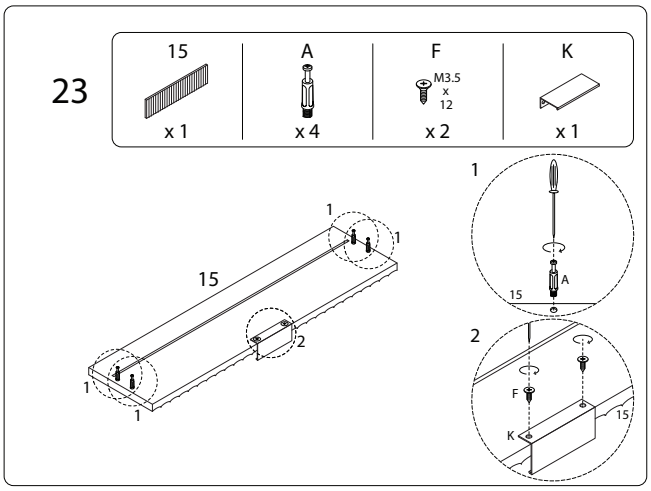
23
15
x 1
A
x 4
F
M3.5 x 12
x 2
K
x 1
1
1
15
2
1
1
1
A
15
2
F
K
15

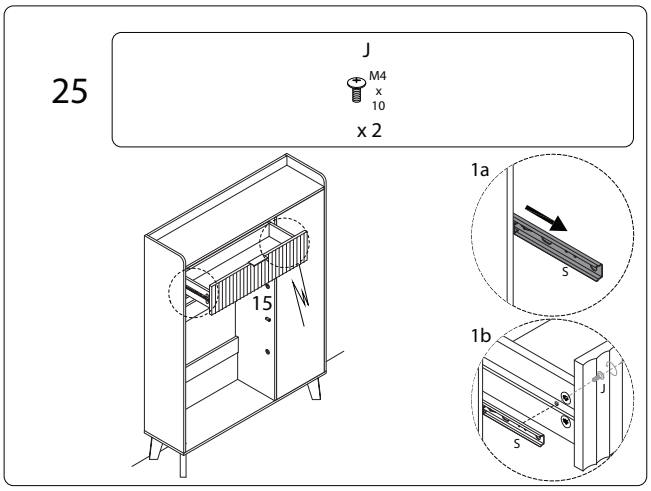
25
J
M4 x 10
x 2
15
1a
S
1b
J
S

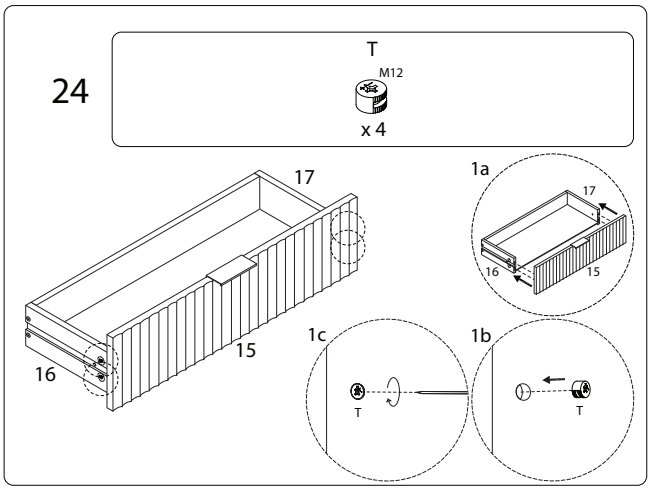
24
T
M12
x 4
17
16
15
1a
17
16
15
1c
T
1b
T

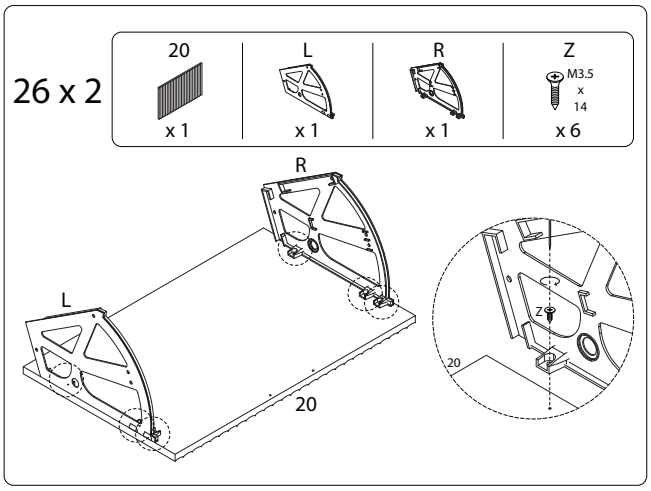
26 x 2
20
x 1
L
x 1
R
x 1
Z
M3.5 x 14
x 6
R
L
20
Z
20

27 x 2

22	W
x 1	M3.5 x 16 x 2

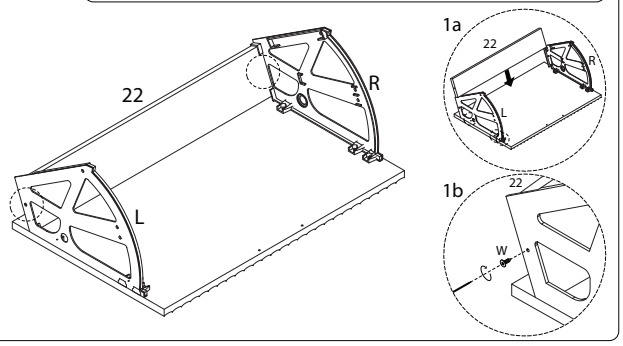

29 x 2

F	K
M3.5 x 12 x 2	x 1

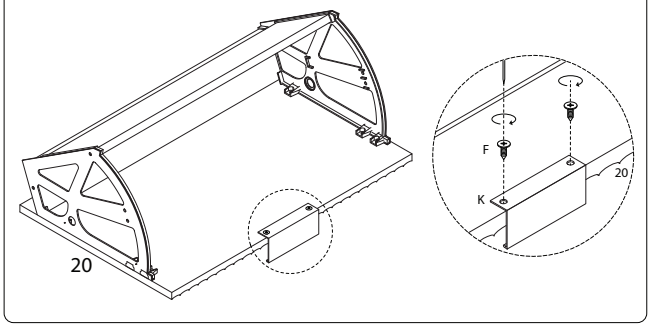

28 x 2

21	W
x 1	M3.5 x 16 x 2

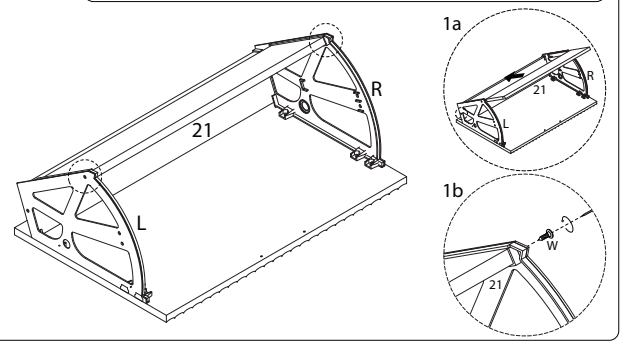

30

E	M	N
M6 x 15 x 4	x 4	x 1

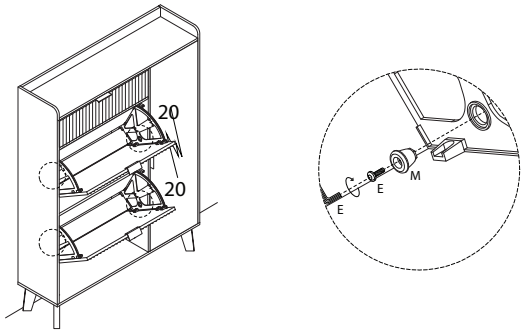

31
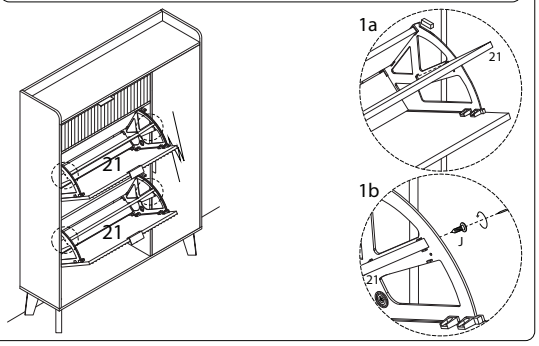
21	W
x 2	M3.5 x 16 x 4