WHALAN

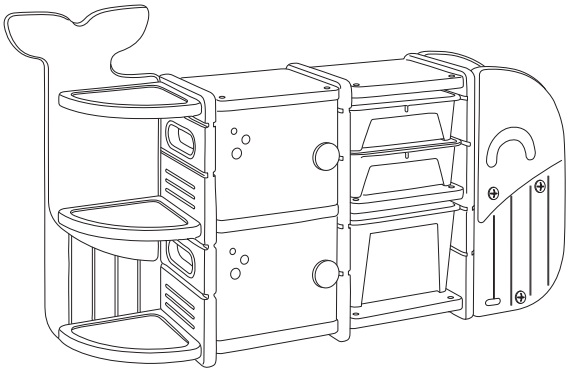

1/11

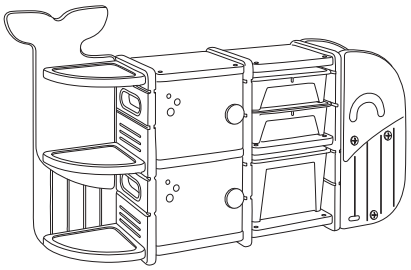

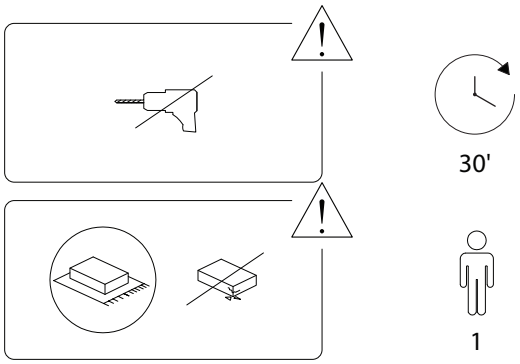

2/11

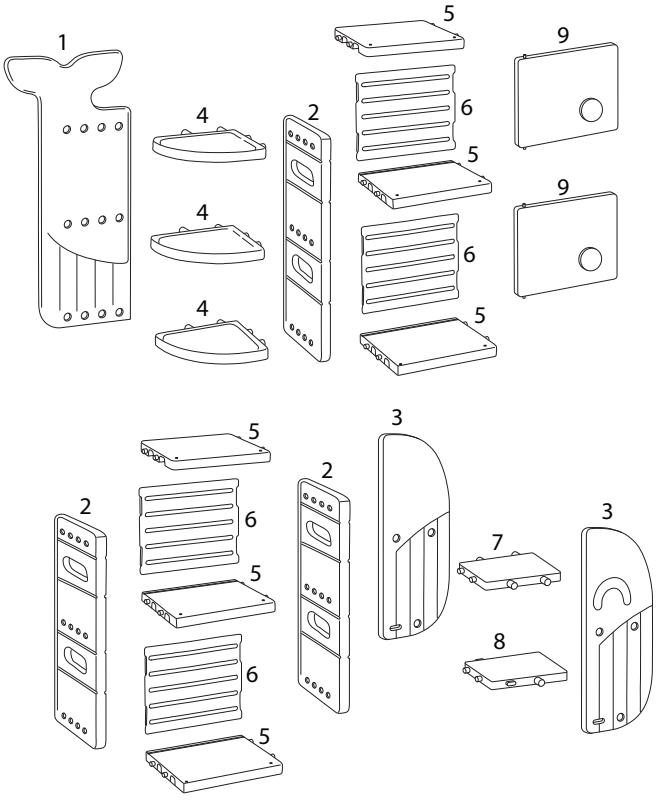

3/11

1 x 1	2 x 3	3 x 2
4 x 3	5 x 6	6 x 4
7 x 1	8 x 1	9 x 2
10 x 30	11 x 1	12 x 2
13 x 2	14 x 1	

4/11

1

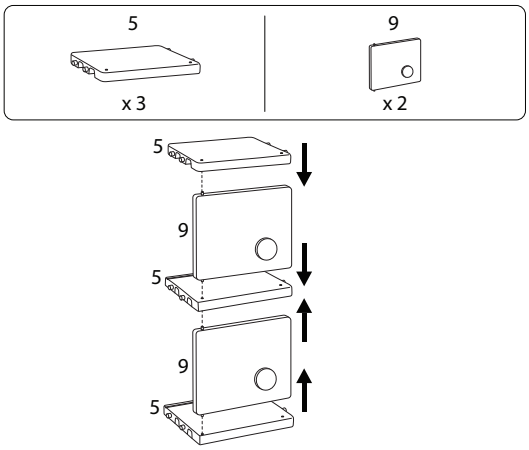

4

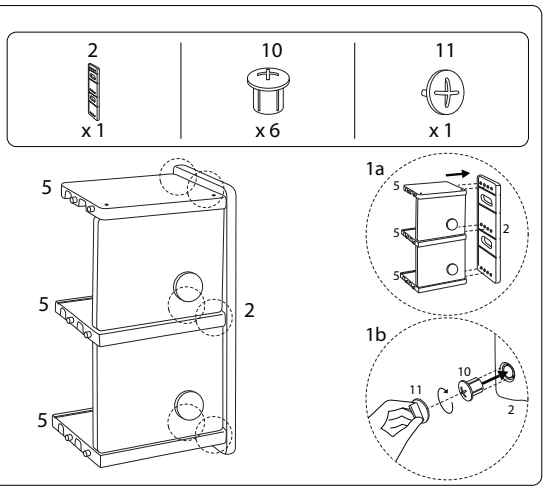

5/11

2902/WHALAN/131026/

3

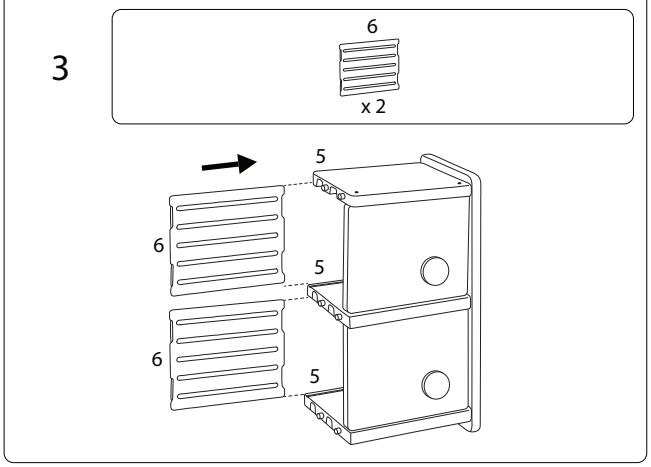

4

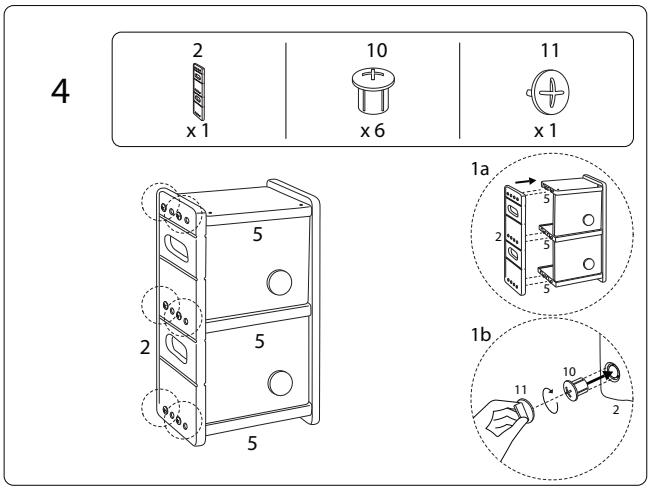

6/11

2902/WHALAN/131026/

5

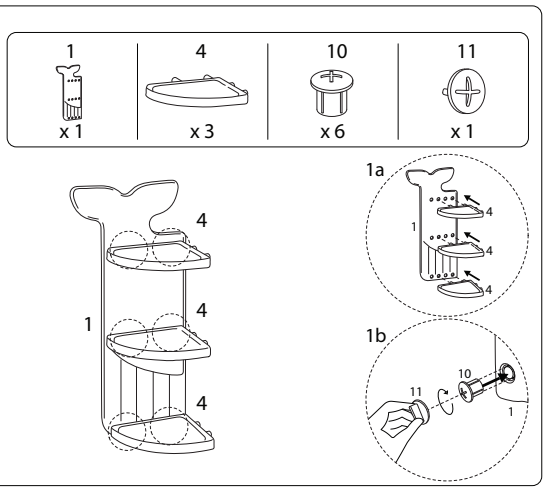

7

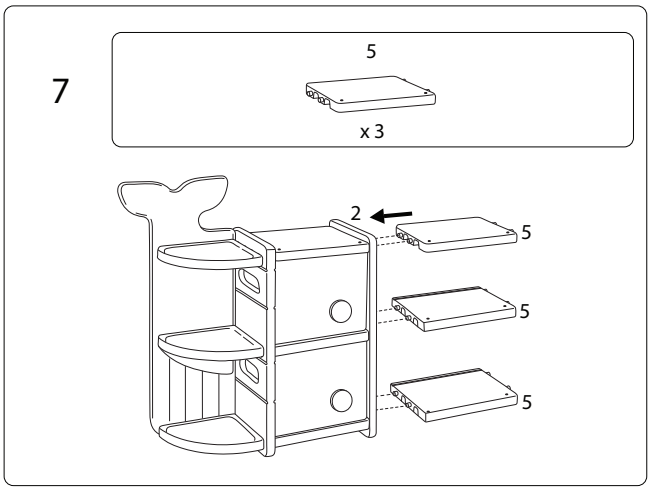

6

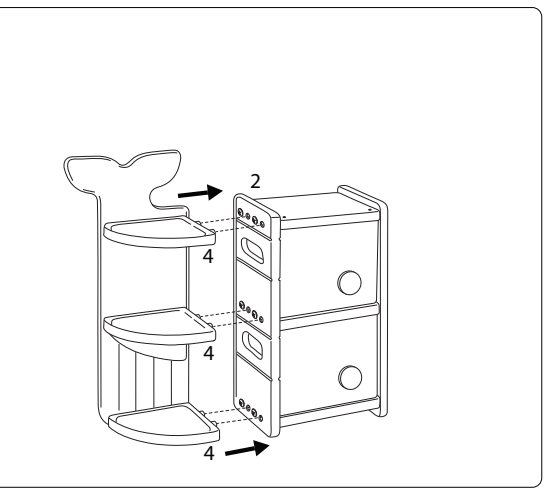

7/11

2902/WHALAN/131026/

8

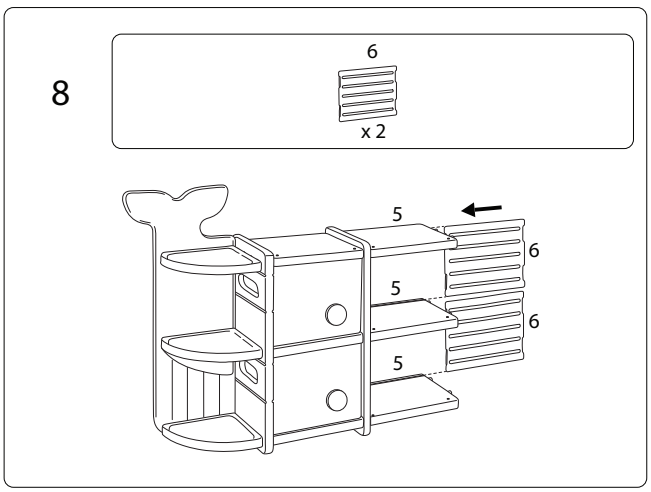

8/11

2902/WHALAN/131026/

9

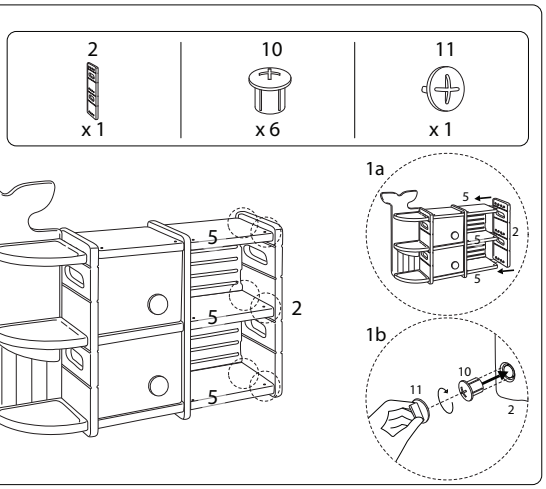
2
x 1
10
x 6
11
x 1
1a
1b
5
2
11
10

10

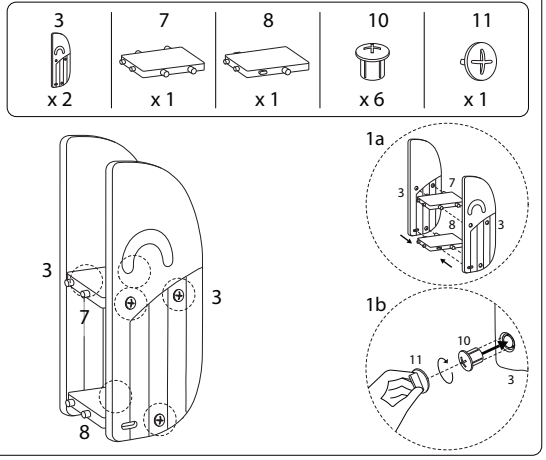
3
x 2
7
x 1
8
x 1
10
x 6
11
x 1
1a
1b
3
7
8
11
10

11

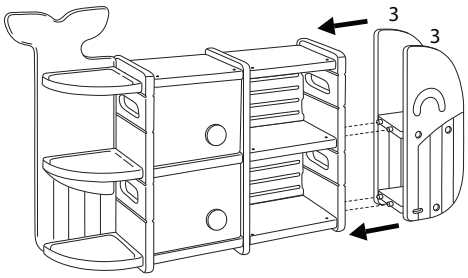
3
3

12

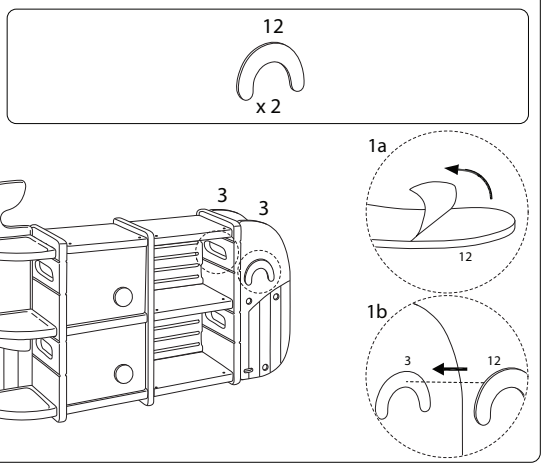
12
x 2
1a
1b
3
12

13

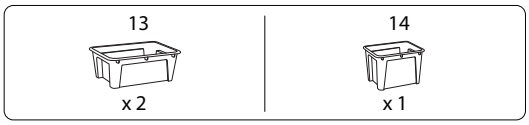
13
x 2
14
x 1

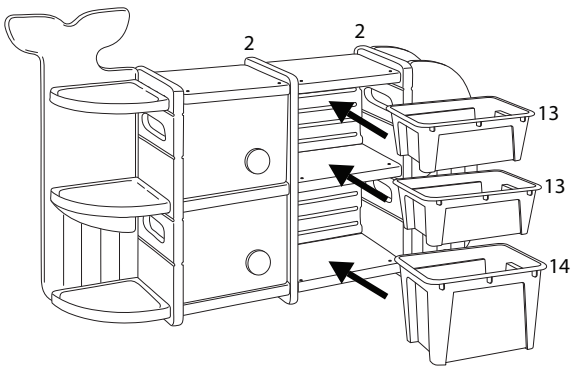
2
2
13
13
14