ZYRA

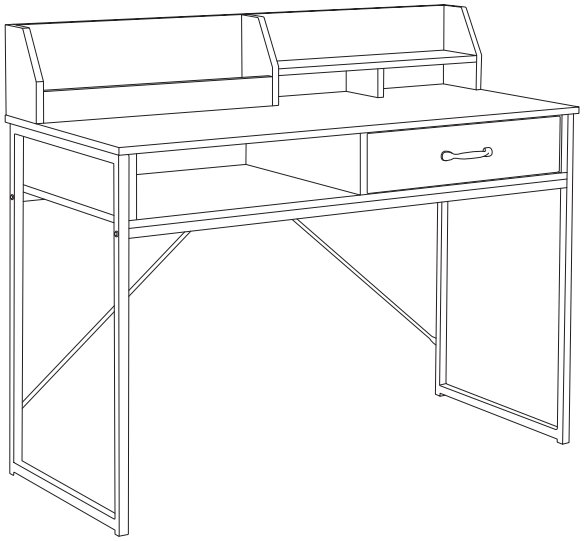

Beliani

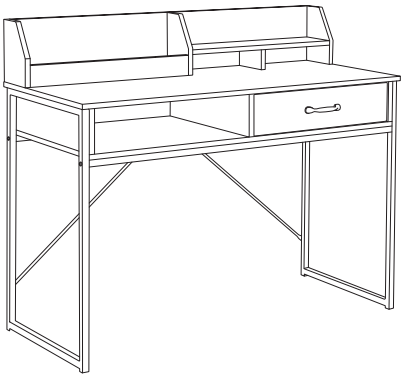

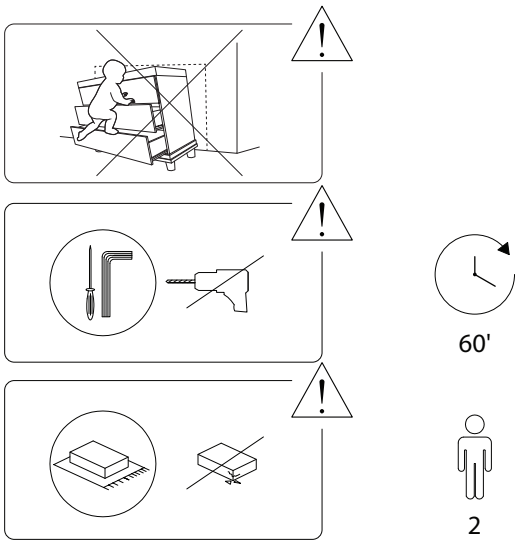

Beliani
2838/ZYRA/300326

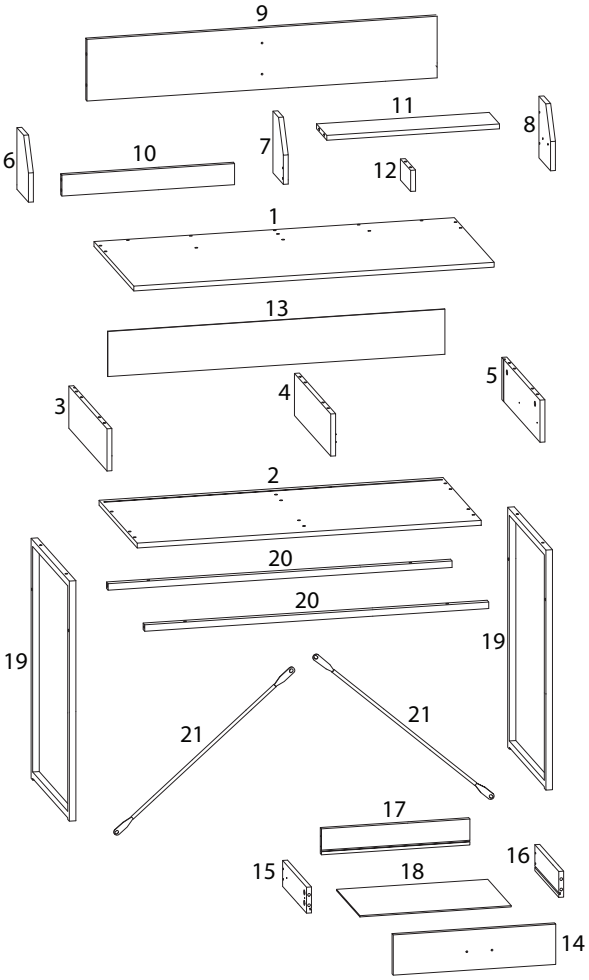

Beliani
2838/ZYRA/300326

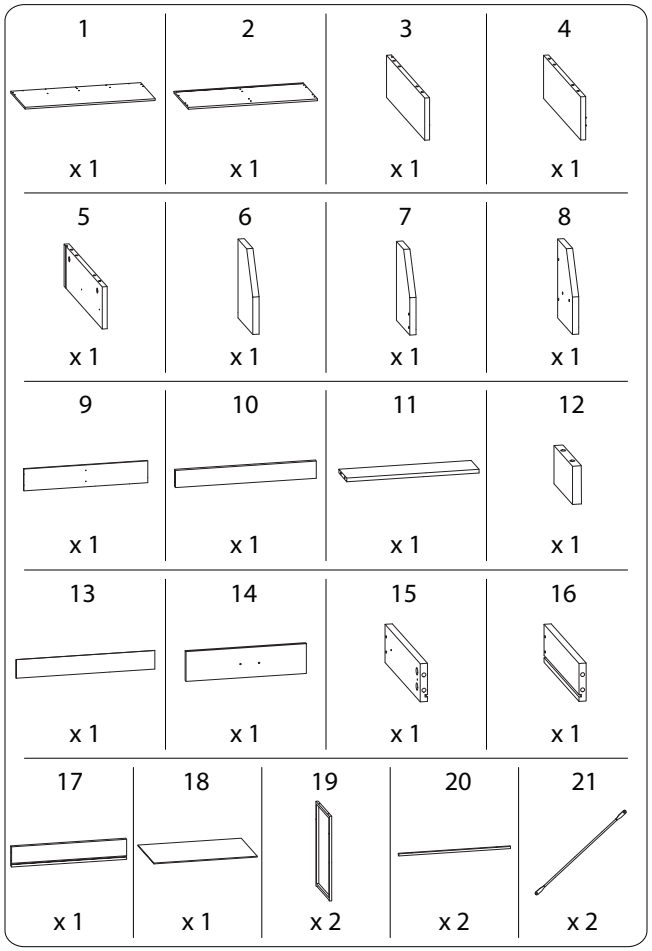

Beliani
2838/ZYRA/300326

A	B	C
		
x 24	x 24	x 17
D	**E**	**F1**
 M7 x 40	 M3.5 x 14	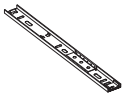
x 16	x 8	x 2
F2	**G**	**H**
	 M6 x 12	 M6 x 30
x 2	x 3	x 8
I	**J**	**K**
 M6 x 40		
x 4	x 1	x 1
L	**M**	
 M4 x 18	 M4 x 35	
x 2	x 4	

Beliani
2838/ZYRA/300326

!

F1	F2
	
x 2	x 2

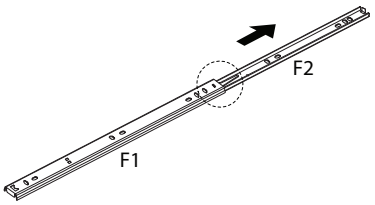

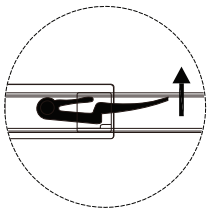

Beliani
2838/ZYRA/300326

2

A	6	7	8	11
				
x 14	x 1	x 1	x 1	x 1

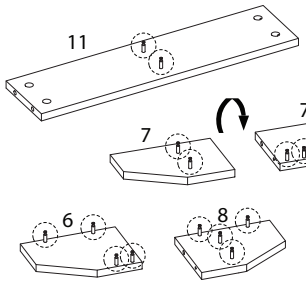

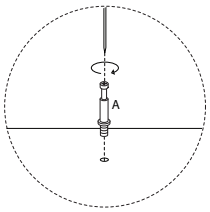

3

10	B
	
x 1	x 4

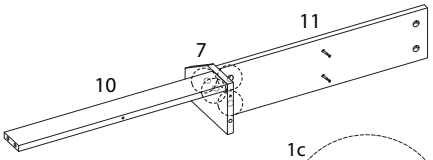

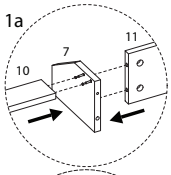

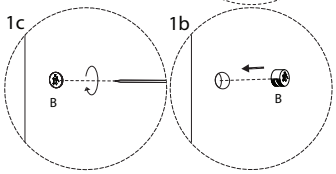

5

9	D	J
	 M7 x 40	
x 1	x 2	x 1

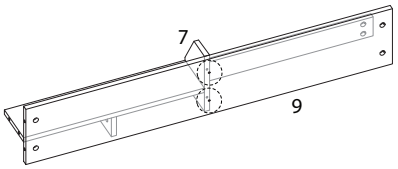

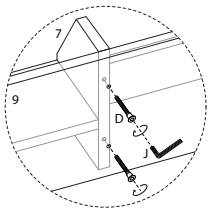

4

12	B
	
x 1	x 2

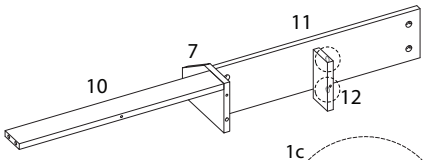

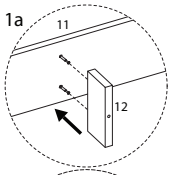

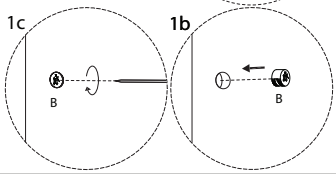

Beliani
2838/ZYRA/300326

6

B
x 4

Beliani
2838/ZYRA/300326

7

B

x 4

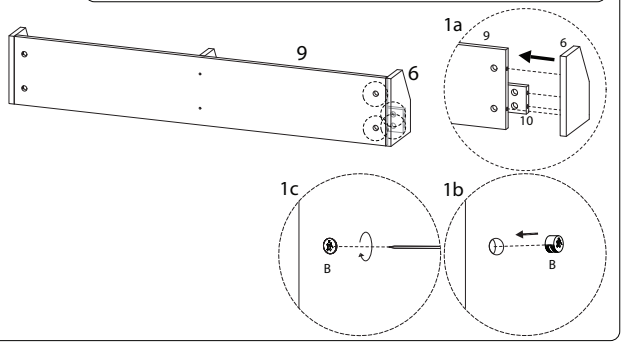

8

C

x 5

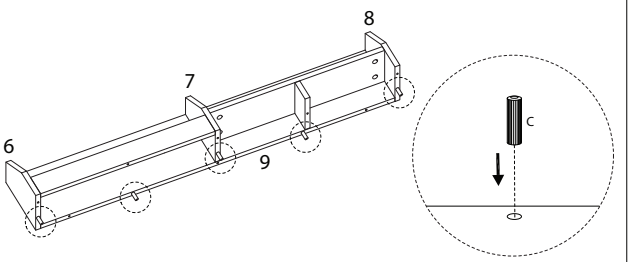

Beliani

2838/ZYRA/300326

9

D

M7 x 40

x 8

J

x 1

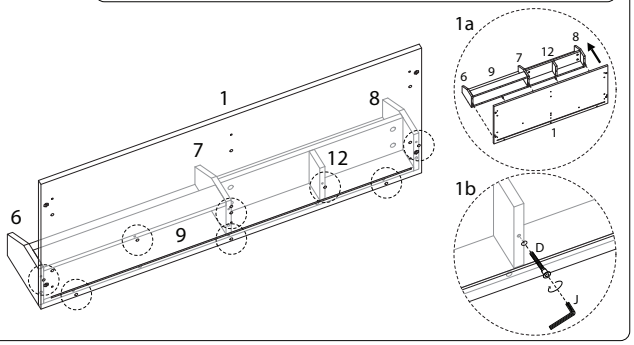

10

A

x 6

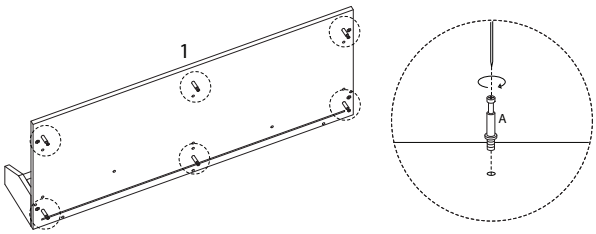

Beliani

2838/ZYRA/300326

11

4

x 1

5

x 1

E

M3.5 x 14

x 4

F1

x 2

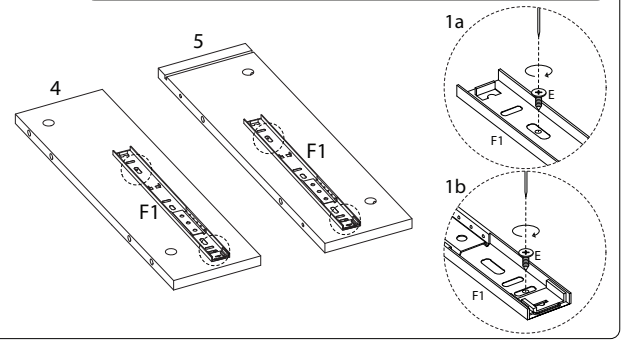

12

3

x 1

C

x 12

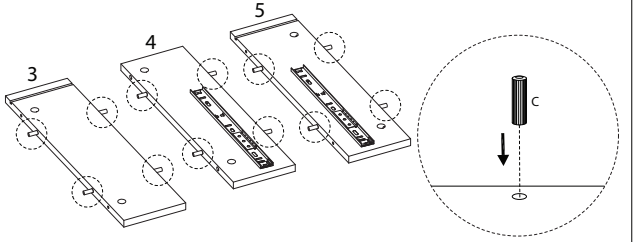

Beliani

2838/ZYRA/300326

13

B

x 6

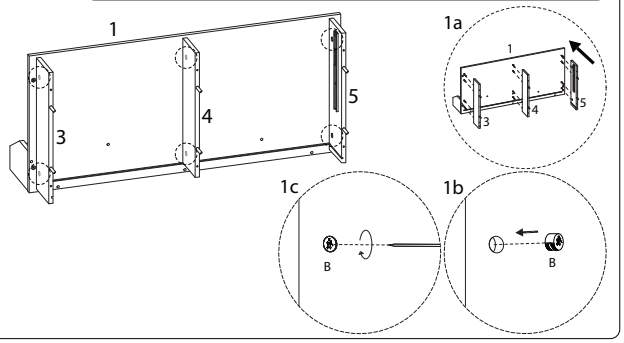

14

13

x 1

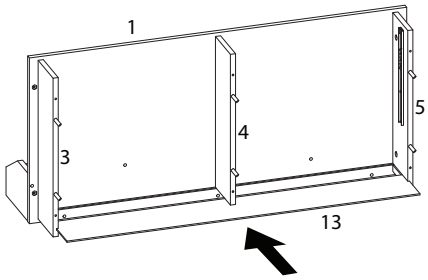

Beliani

2838/ZYRA/300326

15

2	D	J
x 1	M7 x 40 x 6	x 1

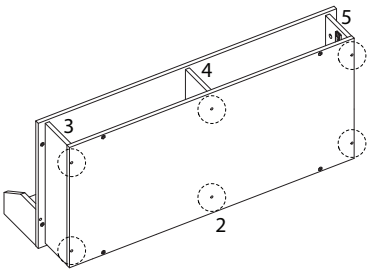

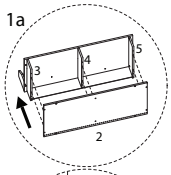

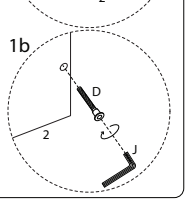

16

19	20	I	J
x 2	x 2	M6 x 40 x 4	x 1

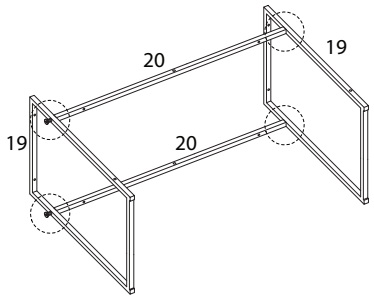

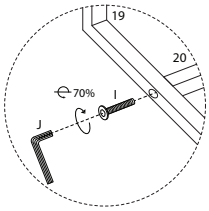

Beliani
2838/ZYRA/300326

17

H	J
M6 x 30 x 8	x 1

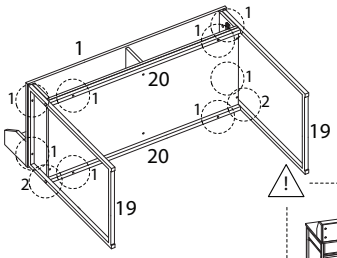

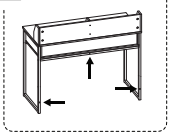

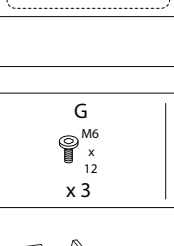

18

21	G	J
x 2	M6 x 12 x 3	x 1

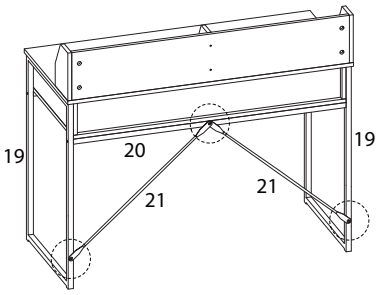

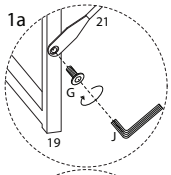

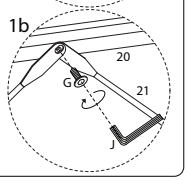

Beliani
2838/ZYRA/300326

19

14	A	K	L
x 1	x 4	x 1	M4 x 18 x 2

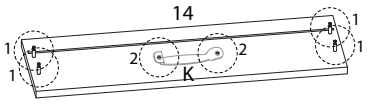

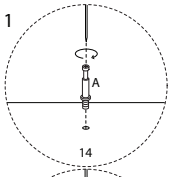

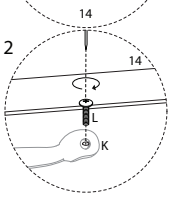

21

18
x 1

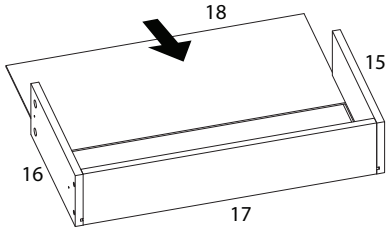

20

15	16	17	M
x 1	x 1	x 1	M4 x 35 x 4

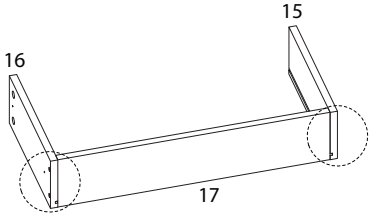

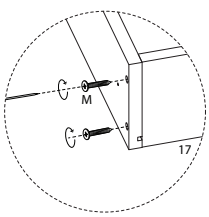

Beliani
2838/ZYRA/300326

22

B
x 4

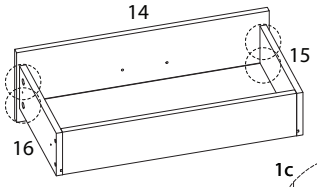

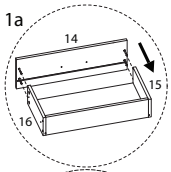

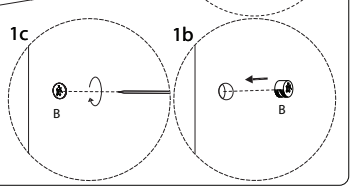

Beliani
2838/ZYRA/300326

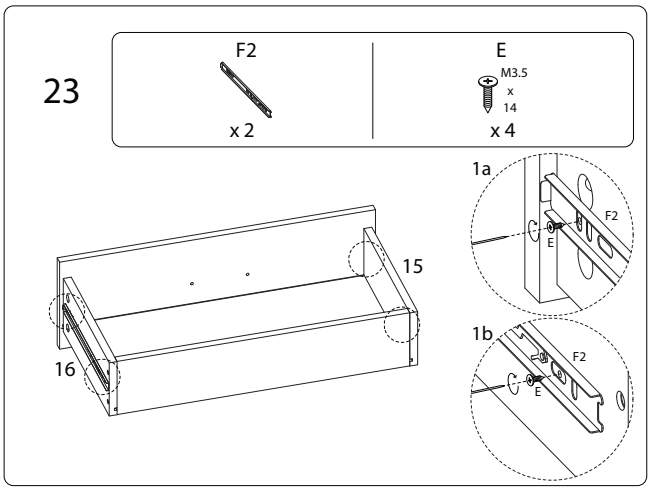

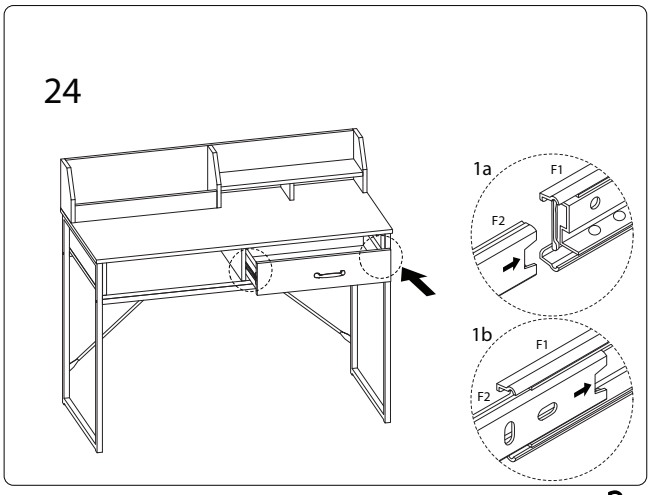

Beliani
2838/ZYRA/300326

Schweiz, Suisse, Svizzera
mail@beliani.ch
tel. +41 43 508 22 33

Deutschland
mail@beliani.de
tel. +49 221 6778 9927

Österreich
mail@beliani.at
tel. +43 1 375 00 57

United Kingdom
mail@beliani.co.uk
tel. +44 20 3318 8222

Polska
mail@beliani.pl
tel. +48 91 350 83 60

Nederland
mail@beliani.nl
tel. +31 38 744 0103

France
mail@beliani.fr
tel. +33 1 84 79 84 99

Italia
mail@beliani.it
tel. +39 06 56548602

España
mail@beliani.es
tel. +34 932 714 061

Portugal
mail@beliani.pt
tel. +351 22 145 07 45

Norge
mail@beliani.no
tel. +47 21 56 99 75

Sverige
mail@beliani.se
tel. +46 8 446 891 58

Suomi
mail@beliani.fi
tel. +358 9 3157 9611

Danmark
mail@beliani.dk
tel. +45 89 88 10 86

Česká Republika
mail@beliani.cz
tel. +420 228881514

Slovensko
mail@beliani.sk
tel. +421 232784612

Magyarország
mail@beliani.hu
tel. +36 (1) 211 4034

România
mail@beliani.ro
tel. +40 316 300 677

België, Belgique
mail@beliani.be
tel. +32 28085614

Representative in EU:

Beliani Kundendienst GmbH
Leverkusener Str. 31
16303 Schwedt
Germany

RECICLA RECICLA COMPOSTA RECICLA

LE TRI + FACILE + + BAC DE TRI

LE TRI + FACILE TRI VERRE

20 PAP 04 PE-LD 06 PS