KEITH

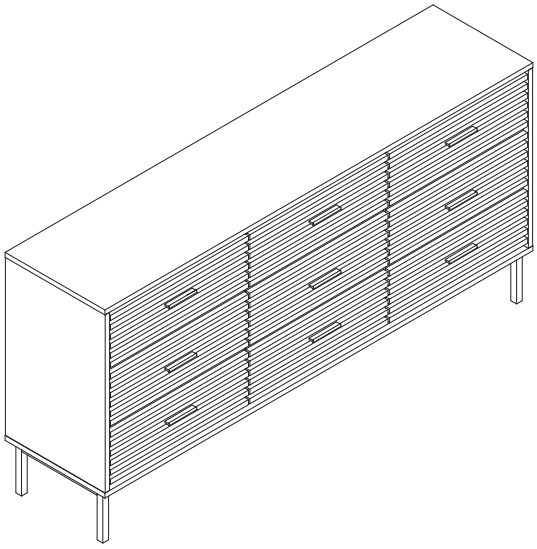

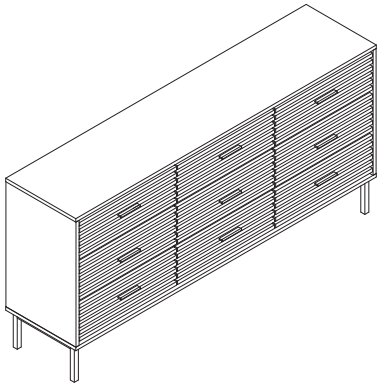

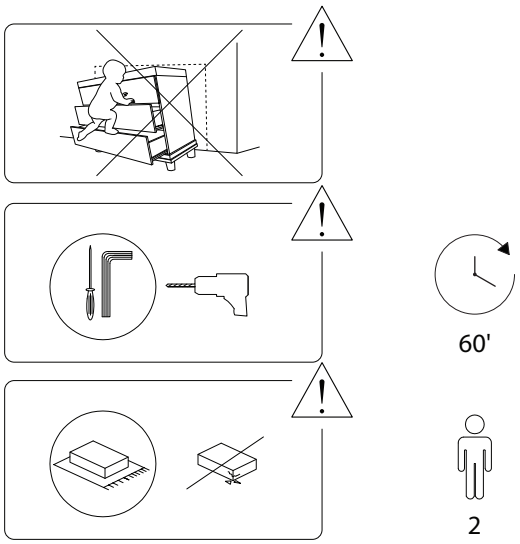
60'
2

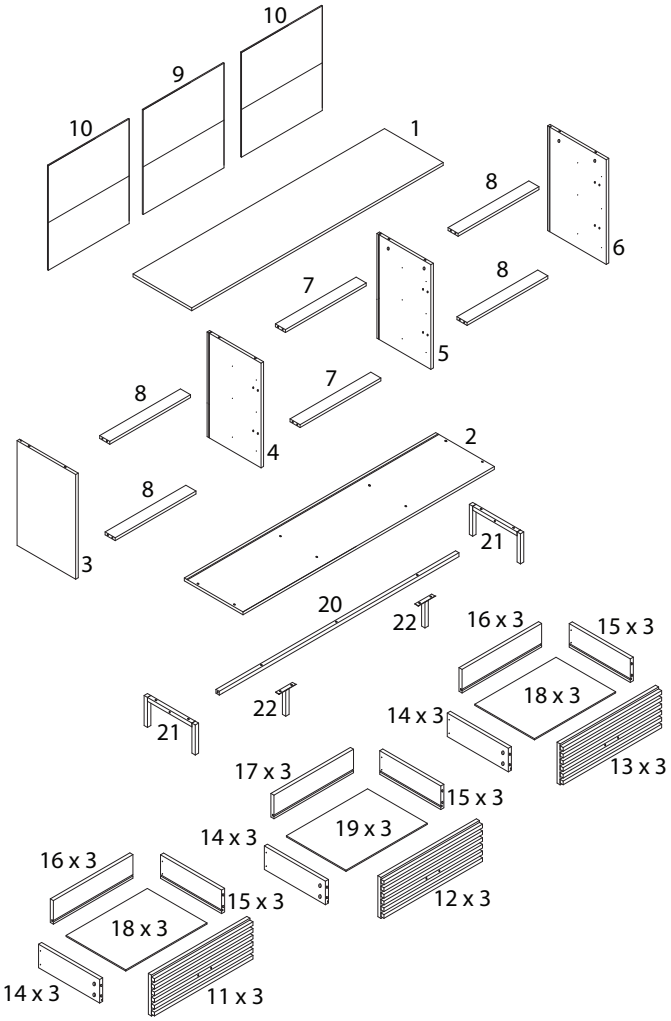
10
9
10
1
8
6
7
8
5
8
7
4
2
8
3
21
20
22
16 x 3
15 x 3
18 x 3
22
21
14 x 3
13 x 3
17 x 3
15 x 3
19 x 3
14 x 3
16 x 3
15 x 3
12 x 3
18 x 3
14 x 3
11 x 3

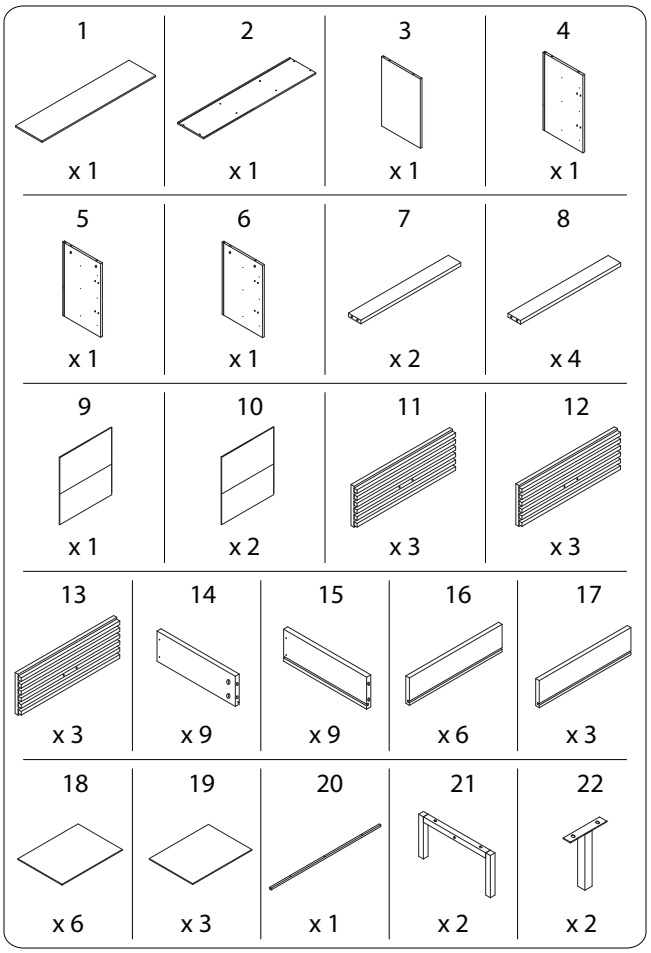
1
x 1
2
x 1
3
x 1
4
x 1
5
x 1
6
x 1
7
x 2
8
x 4
9
x 1
10
x 2
11
x 3
12
x 3
13
x 3
14
x 9
15
x 9
16
x 6
17
x 3
18
x 6
19
x 3
20
x 1
21
x 2
22
x 2

A	B	C
x 68	x 68	M3.5 x 14 x 87
D	**E**	**F**
M3.5 x 35 x 39	x 9	M3 x 30 x 18
G	**H1**	**H2**
x 12	x 18	x 18
I	**J**	**K**
M6 x 15 x 4	M6 x 30 x 9	x 1
L	**M**	**N**
x 3	x 3	M7 x 38 x 8

!

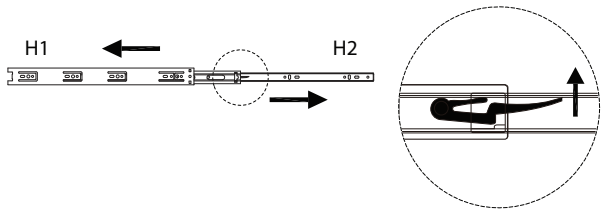

1

4	5	C	H1
x 1	x 1	M3.5 x 14 x 24	x 12

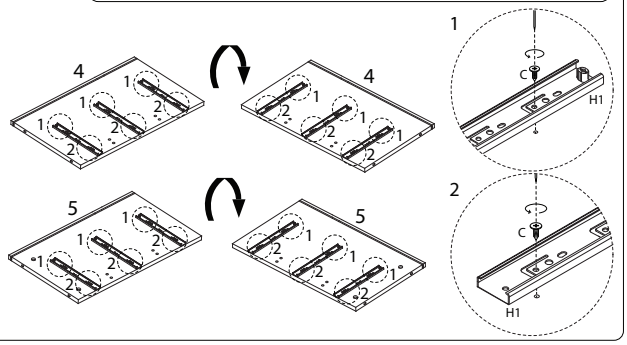

2

A
x 16

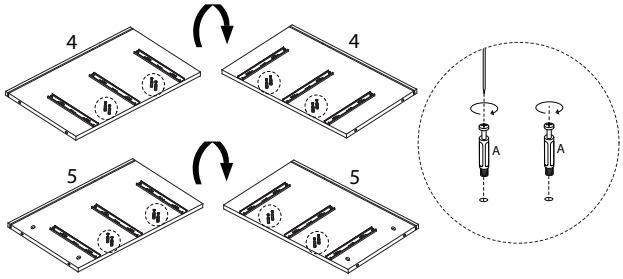

3

7	B
x 2	x 8

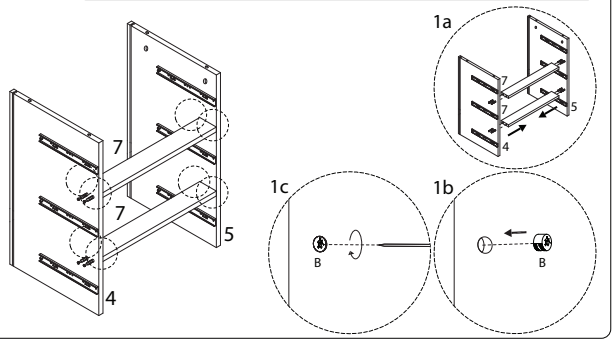

4

3	6	C	H1
x 1	x 1	M3.5 x 14 x 12	x 6

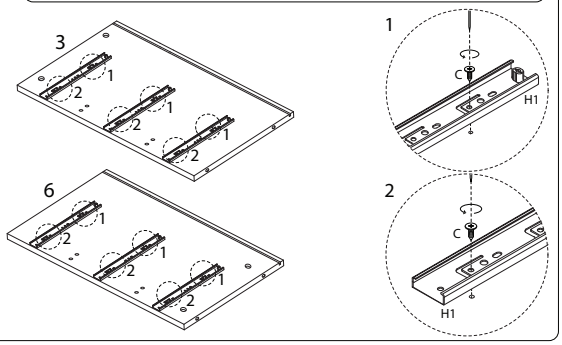

5

A
x 8

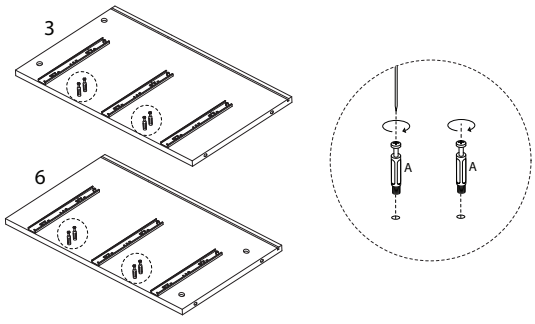

6

8	B
x 4	x 16

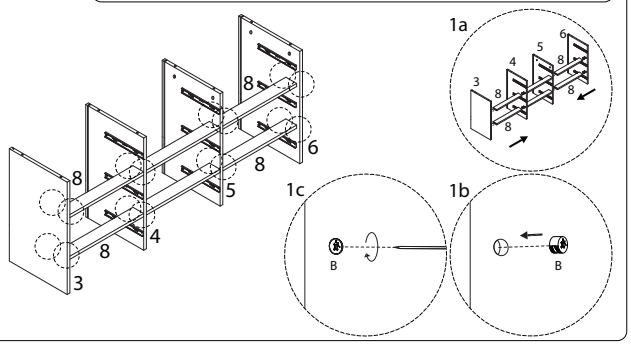

7

1	A
x 1	x 8

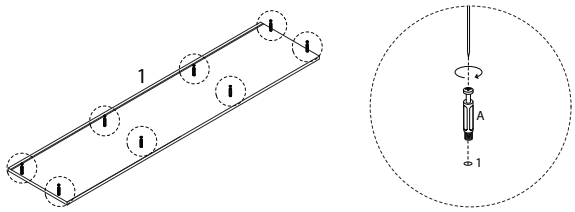

8

B
x 8

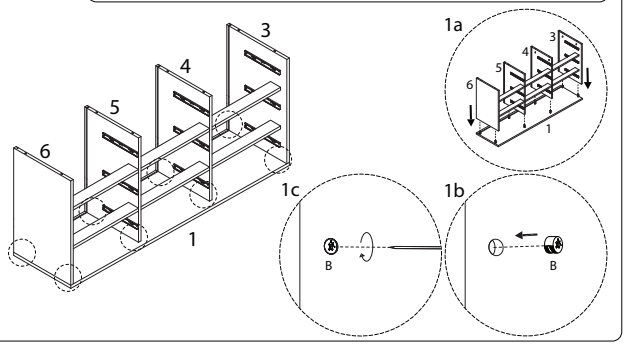

9

9	10
x 1	x 2

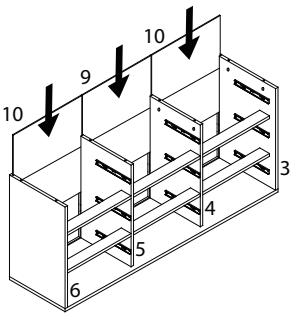

10

2	N
x 1	M7 x 38 x 8

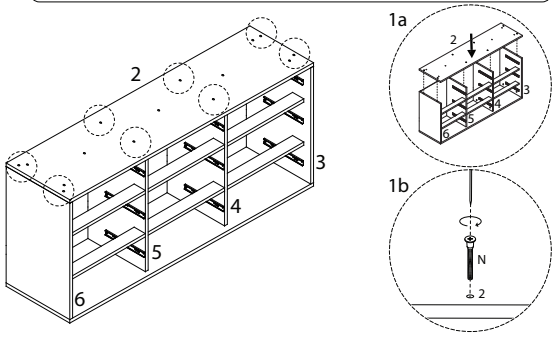

12

J	K
M6 x 30 x 7	x 1

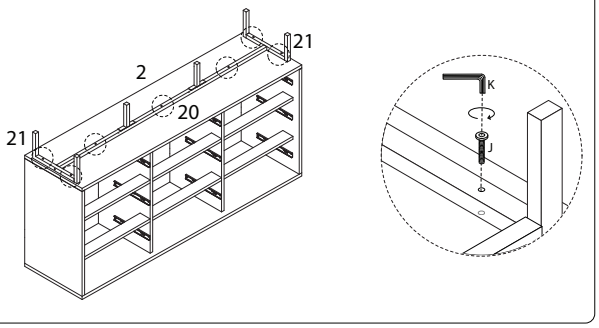

11

20	21	22	I	J	K
x 1	x 2	x 2	M6 x 15 x 4	M6 x 30 x 2	x 1

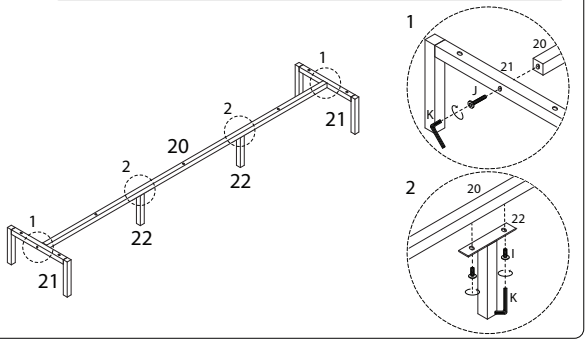

13 x 3

11	12	13	A	E	F
x 1	x 1	x 1	x 12	x 3	M3 x 30 x 6

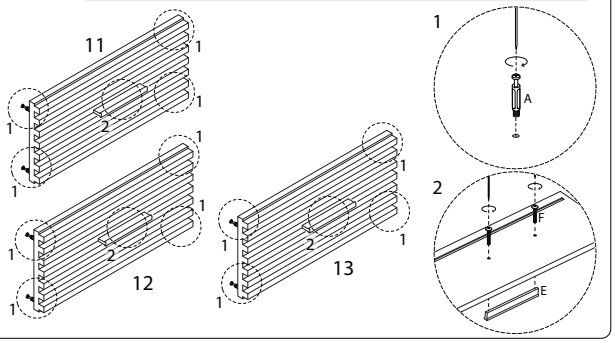

14 x 6

14	15	16	D
x 1	x 1	x 1	M3.5 x 35 x 4

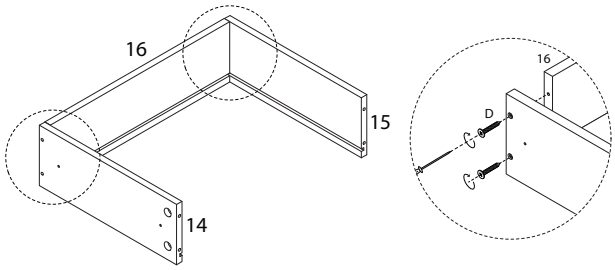

15 x 3

14	15	17	D
x 1	x 1	x 1	M3.5 x 35 x 4

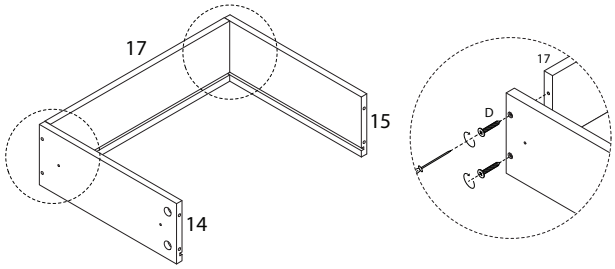

16 x 6

18
x 1

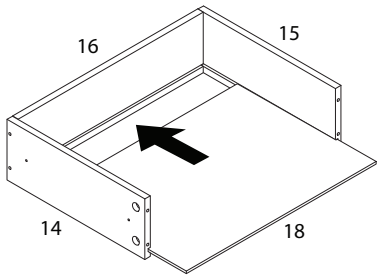

17 x 3

19
x 1

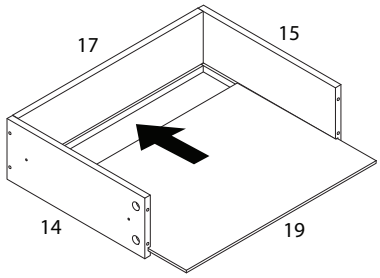

18 x 3

B
x 4

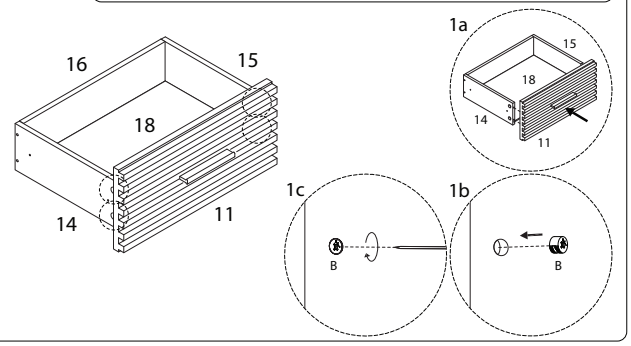

20 x 3

B
x 4

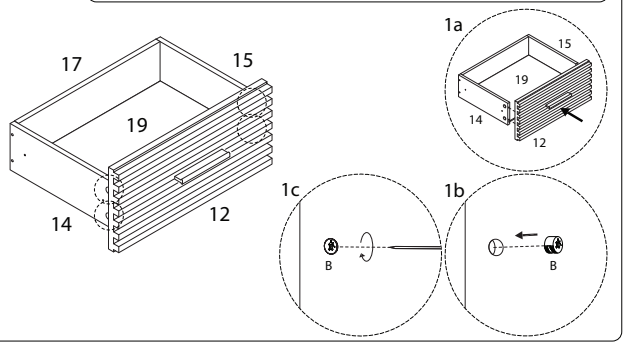

19 x 3

B
x 4

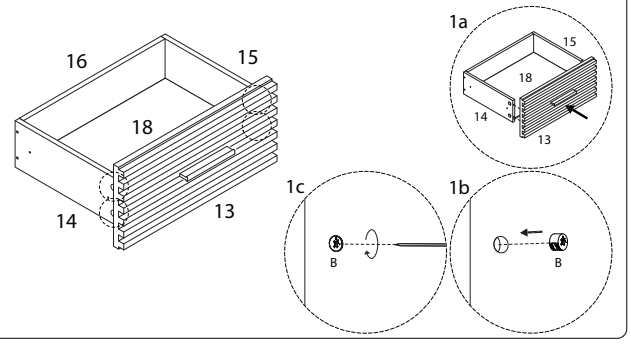

21 x 3

C	H2
M3.5 x 14 x 12	x 6

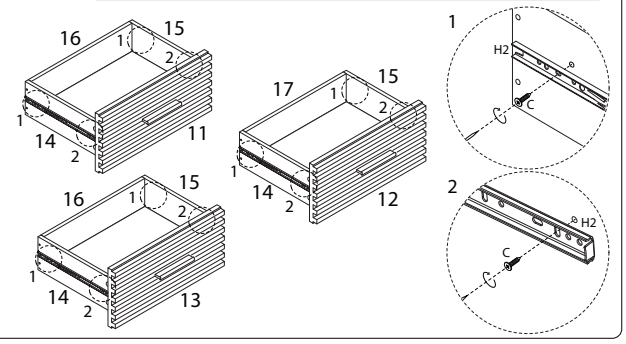

22

C	G
M3.5 x 14	
x 12	x 12

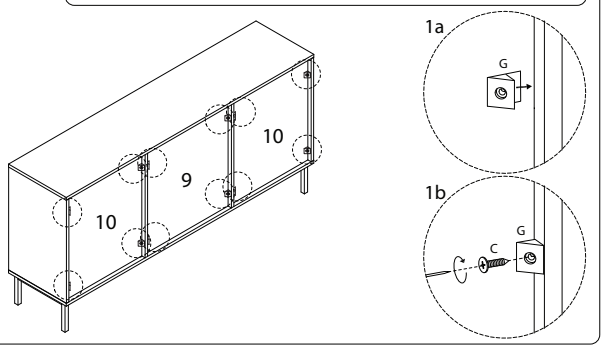

23

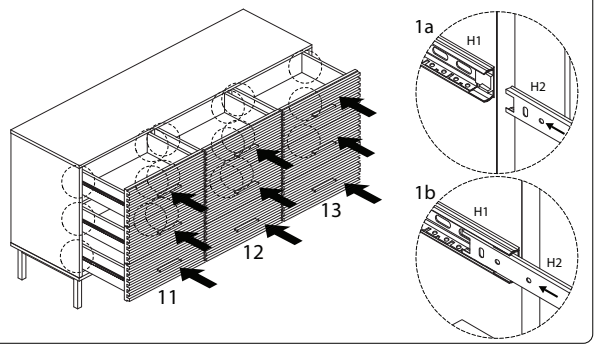

24

C	M
M3.5 x 14	
x 3	x 3

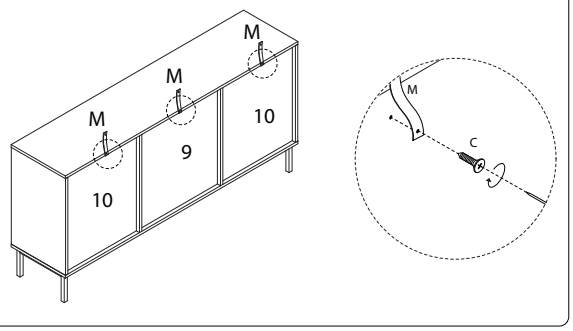

25
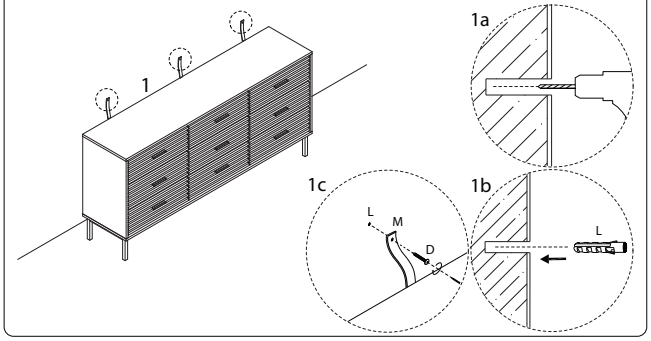
D	L
M3.5 x 35	
x 3	x 3