YELCHO

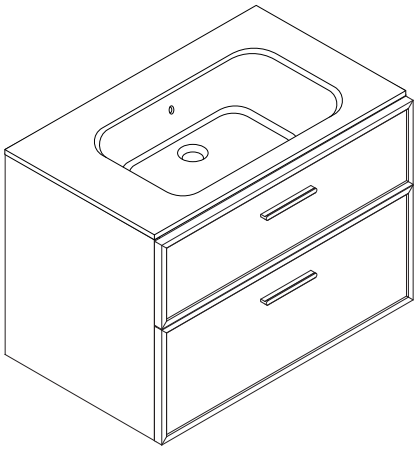

1/23

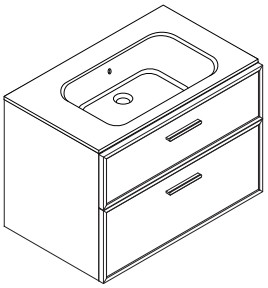

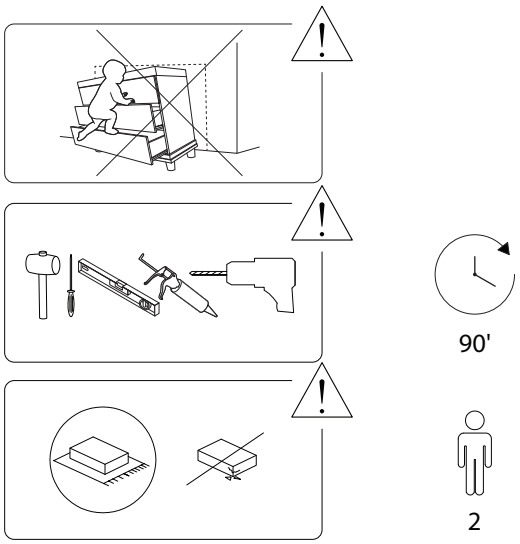

2/23

77/YELCHO/111225/

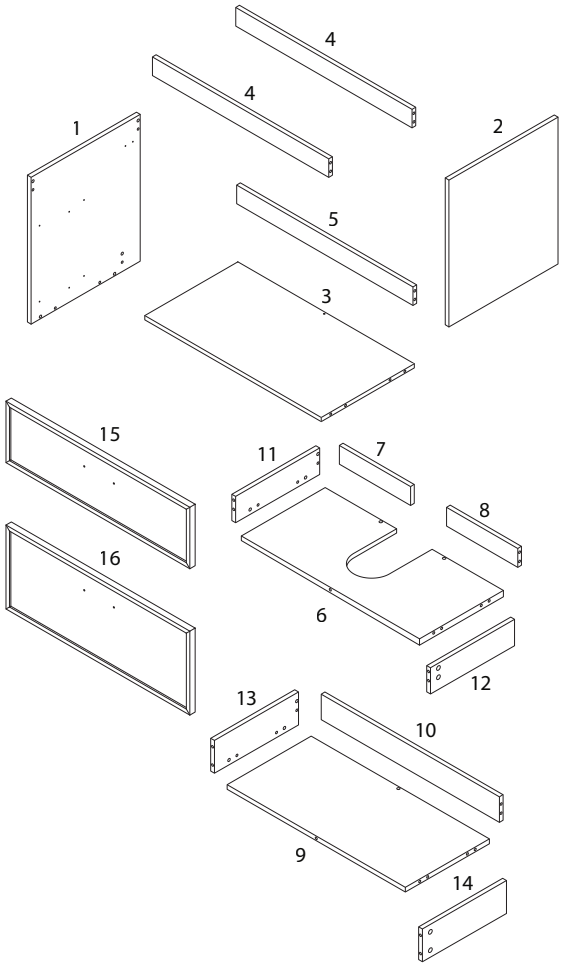

3/23

77/YELCHO/111225/

1 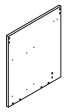 x 1	2 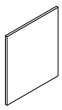 x 1	3 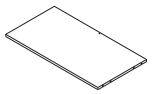 x 1	4 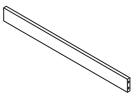 x 2
5 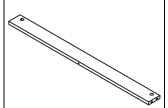 x 1	6 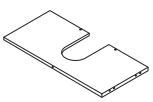 x 1	7 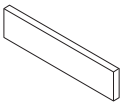 x 1	8 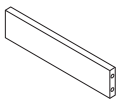 x 1
9 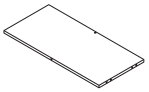 x 1	10 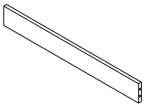 x 1	11 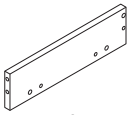 x 1	12 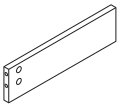 x 1
13 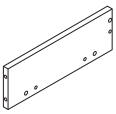 x 1	14 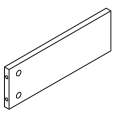 x 1	15 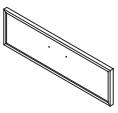 x 1	16 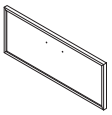 x 1

4/23

77/YELCHO/111225/

A	B1	B2	C
			
x 35	x 35	x 35	x 22
D1	**D2**	**D3**	**E**
		 ST4 x 30	 ST4 x 14
x 2	x 2	x 4	x 19
F	**G**	**H**	**I**
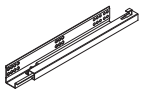	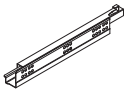	 ST4 x 25	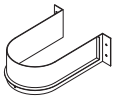
x 2	x 2	x 4	x 1
J	**K**	**L1**	**L2**
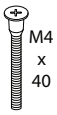 M4 x 40		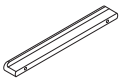	 M4 x 22
x 1	x 4	x 2	x 4
M		**N**	
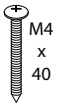 M4 x 40		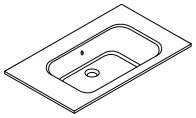	
x 4		x 1	

77/YELCHO/111225/

1

1	2	D1	D3
x 1	x 1	x 2	ST4 x 30 x 4

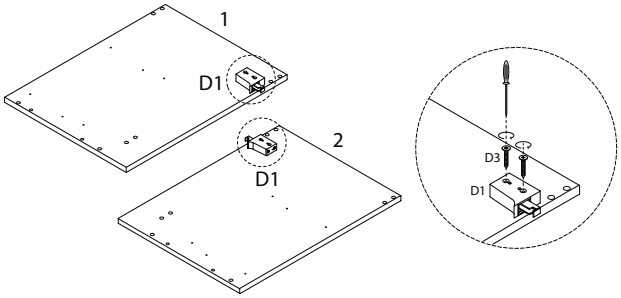

2

A
x 10

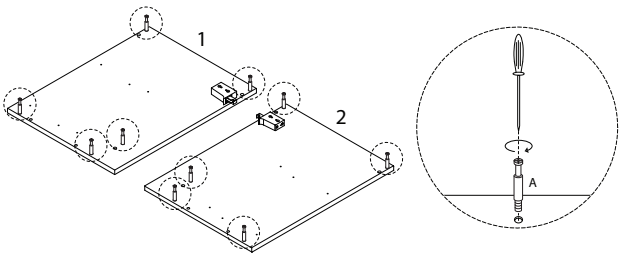

77/YELCHO/111225/

3

E	F	G
ST4 x 14 x 12	x 2	x 2

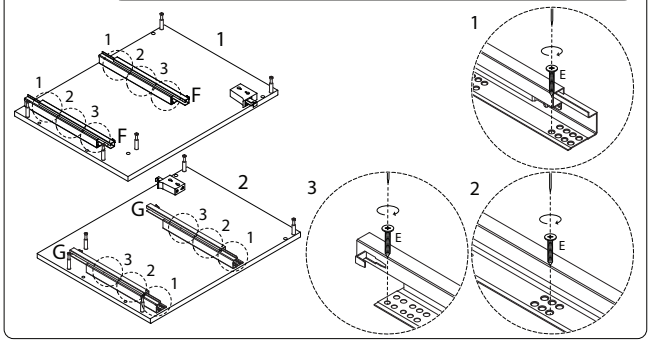

4

6	9	15	16	A
x 1	x 1	x 1	x 1	x 13

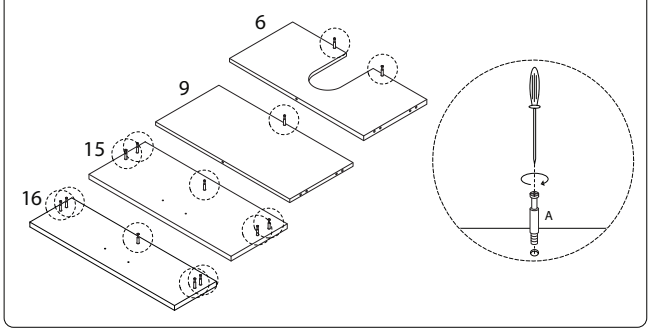

77/YELCHO/111225/

5

11	12	13	14	A
x 1	x 1	x 1	x 1	x 12

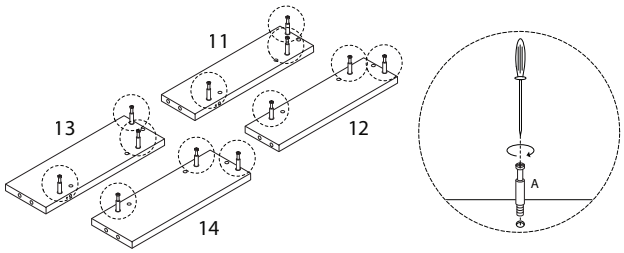

6

3	7	8	C
x 1	x 1	x 1	x 14

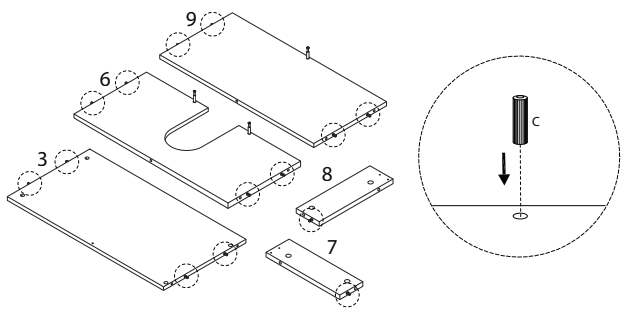

77/YELCHO/111225/

7

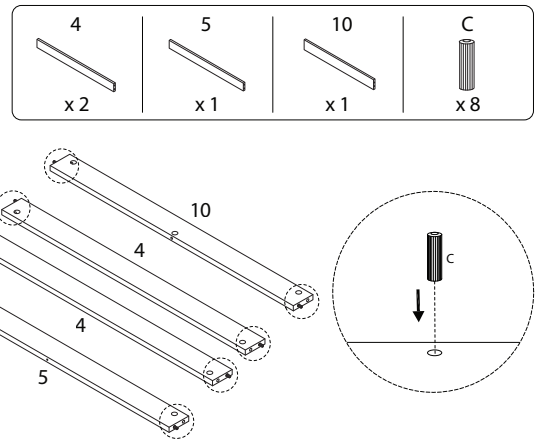

8

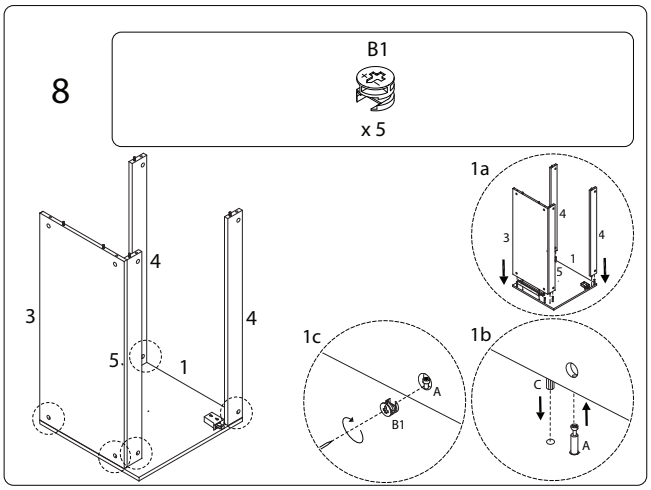

9/23

9

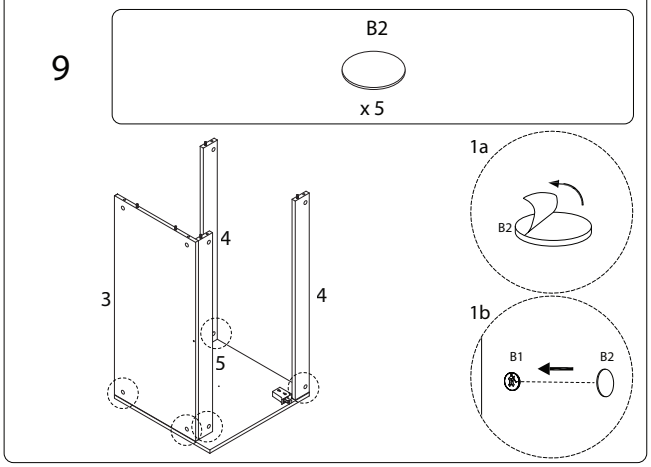

10

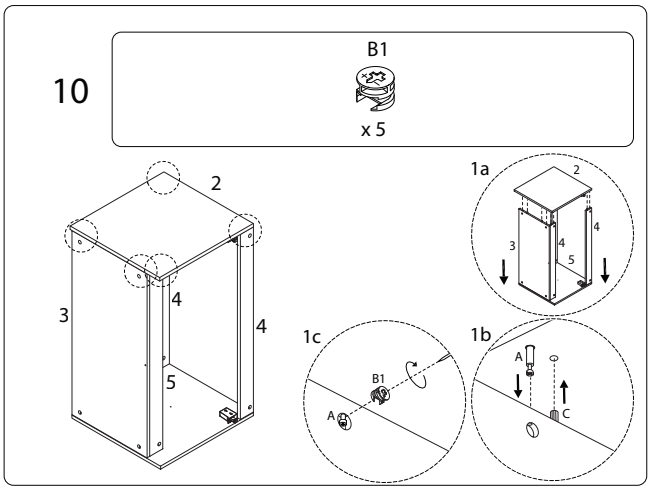

10/23

11

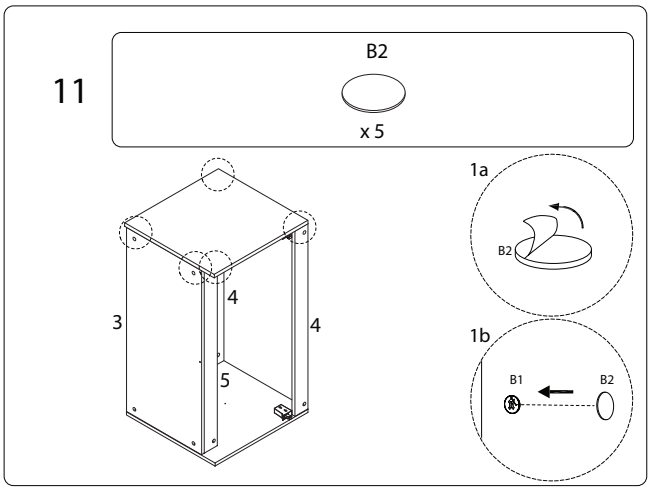

13

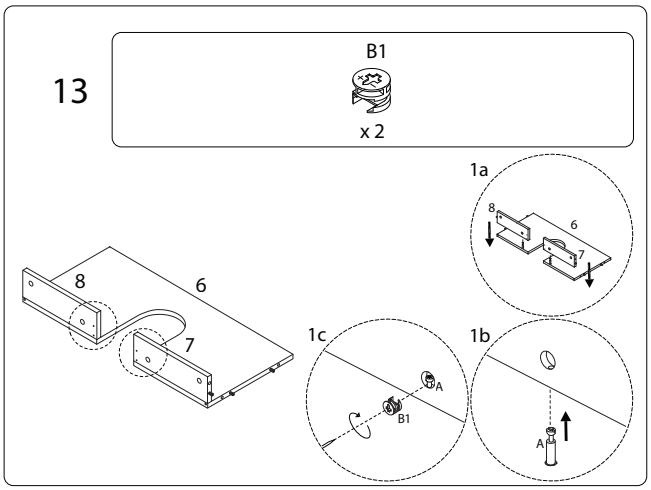

12

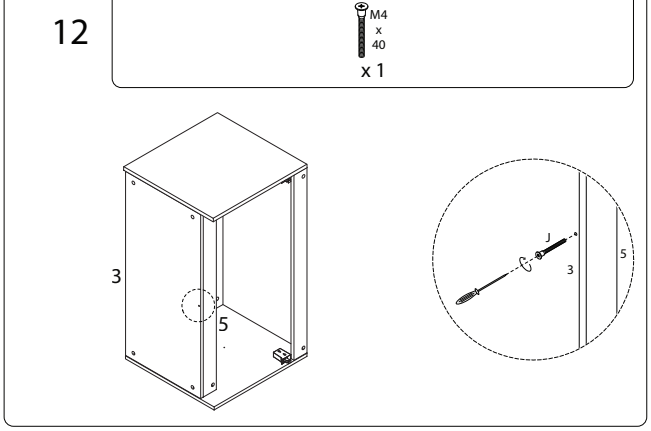

11/23

14

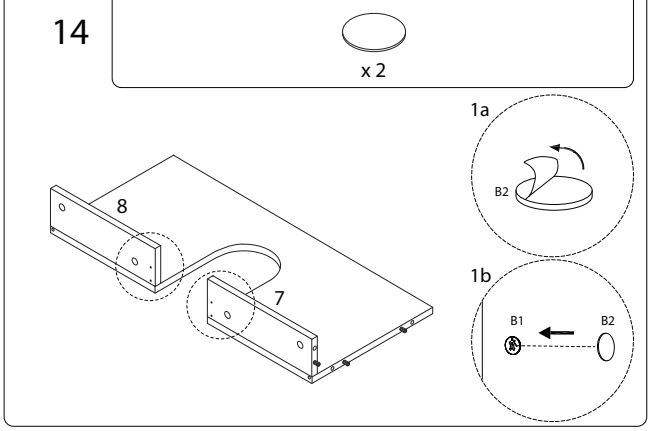

12/23

15

B1

x 6

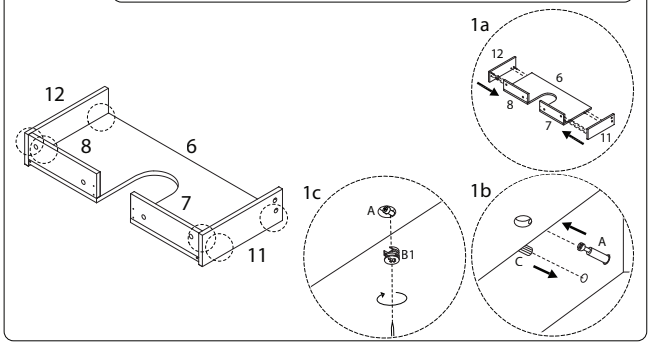

17

E

ST4 x 14

x 7

I

x 1

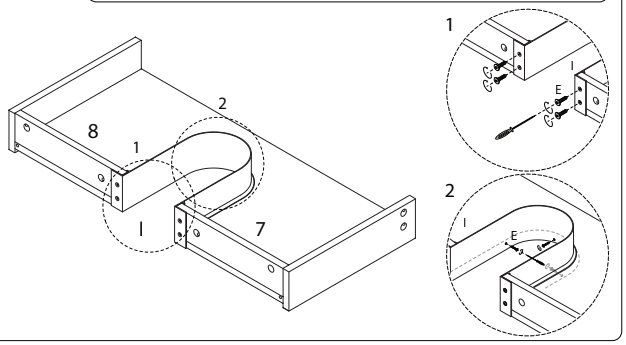

16

B2

x 6

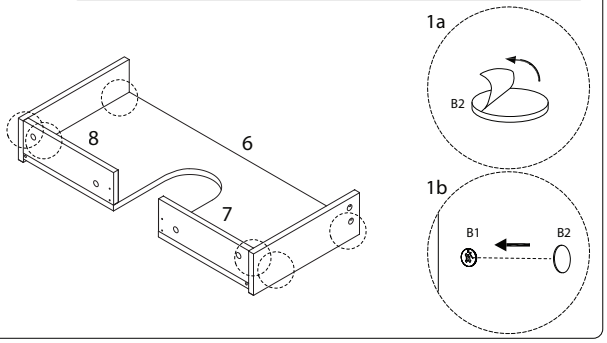

18

B1

x 5

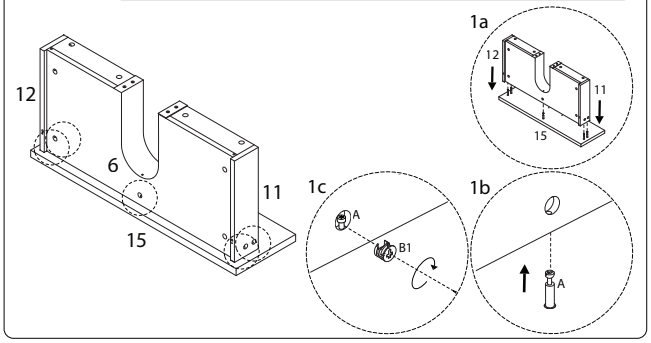

77/YELCHO/111225/

77/YELCHO/111225/

19

B2

x 5

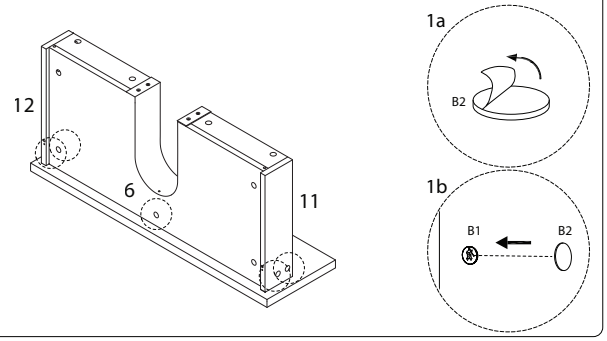

21

B1

x 1

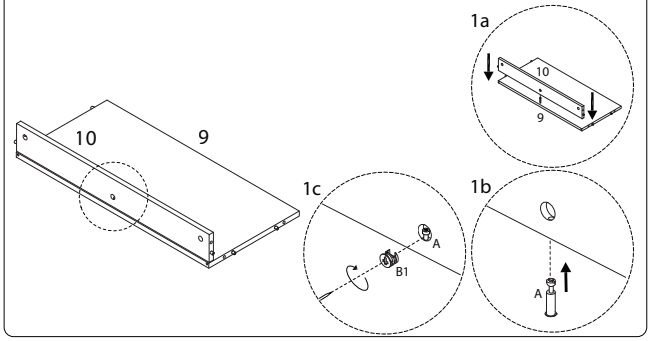

20

L1

x 1

L2

M4 x 22

x 2

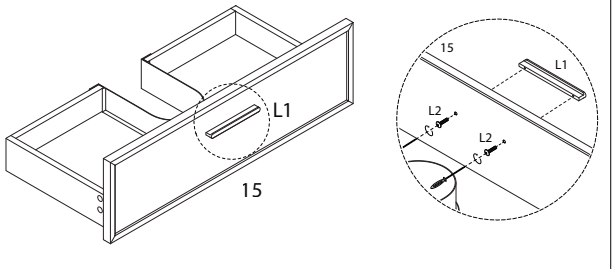

22

B2

x 1

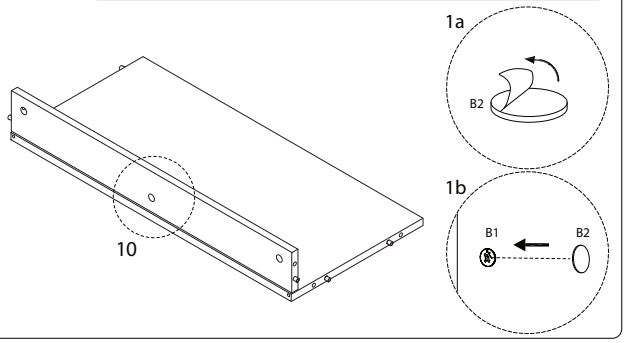

77/YELCHO/111225/

23

B1

x 6

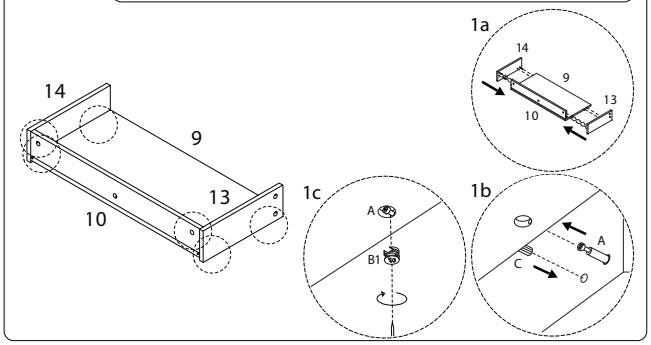

24

B2

x 6

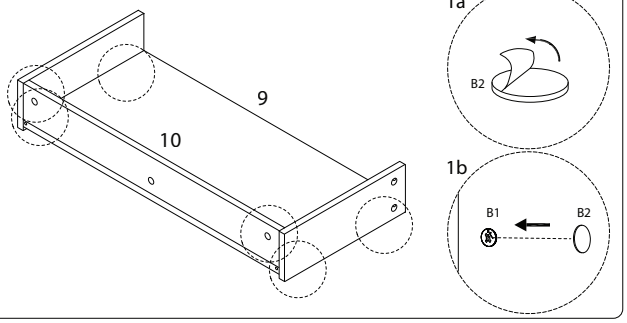

25

B1

x 5

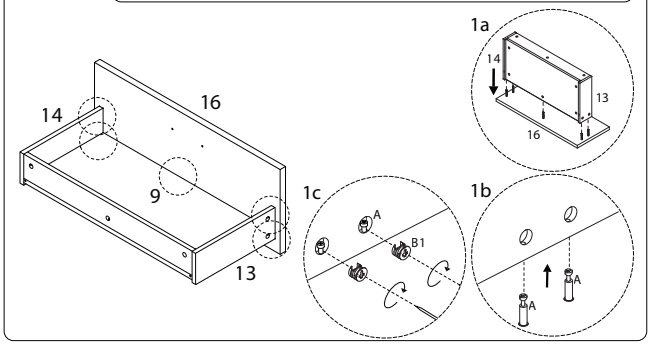

26

B2

x 5

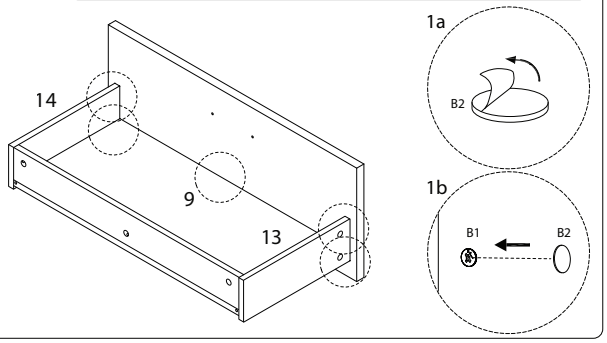

27

L1

x 1

L2

M4 x 22

x 2

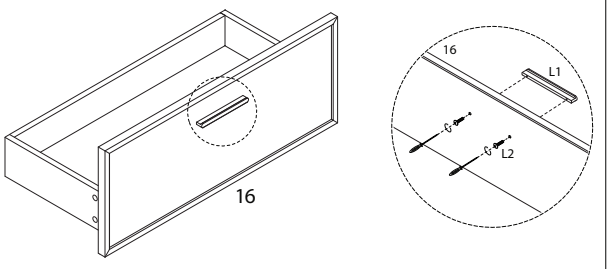

29

D2

x 2

M

M4 x 40

x 4

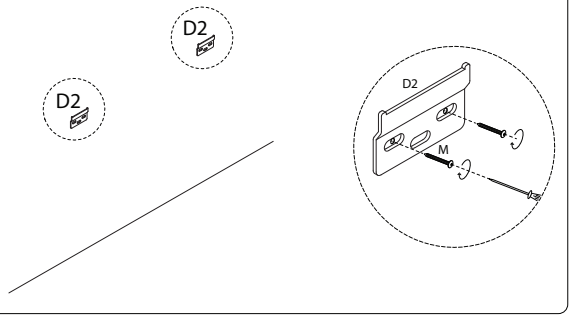

28

K

x 4

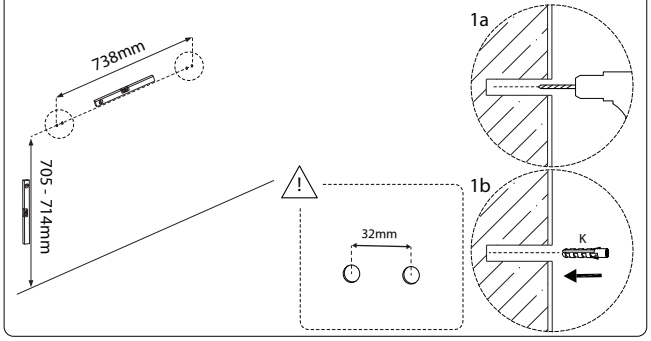

30

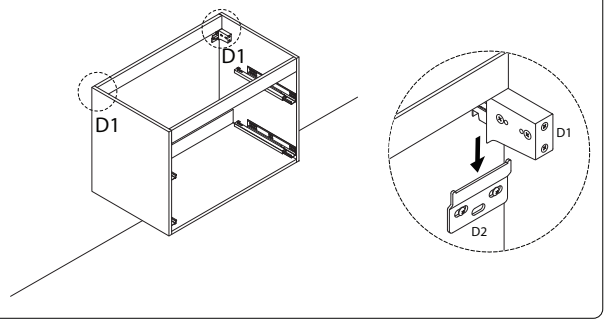

!

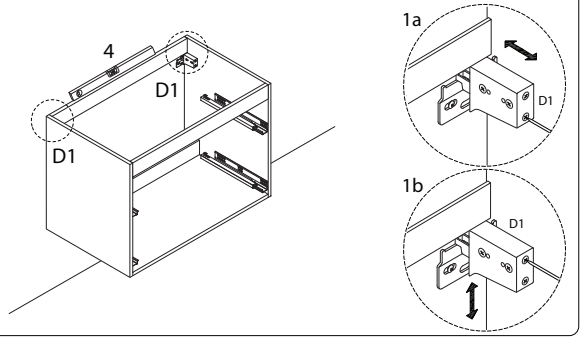
4
D1
D1
1a
D1
1b
D1

32

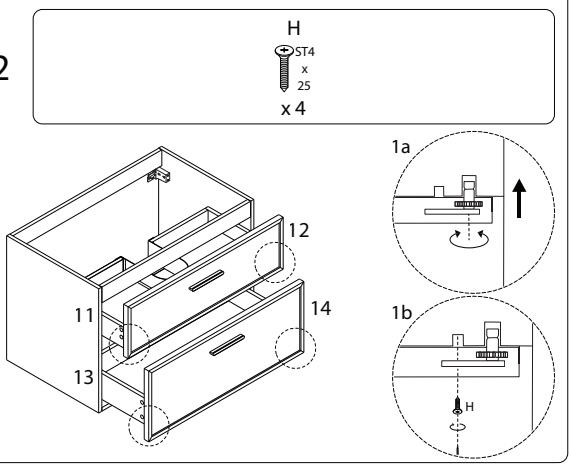
H
ST4
x
25
x 4
12
11
14
13
1a
1b
H

31

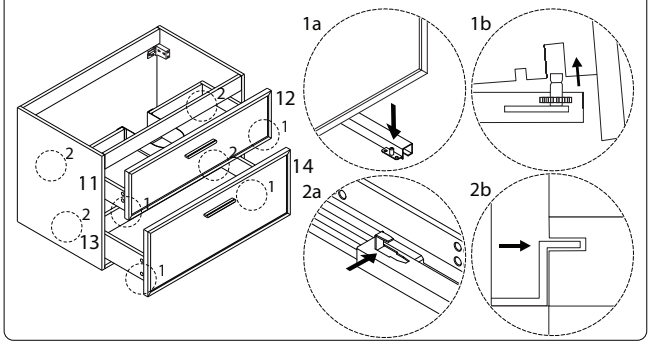
12
11
14
13
1a
1b
2a
2b

33

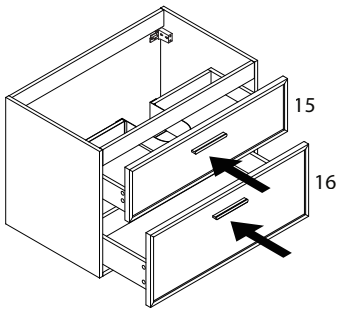
15
16

34

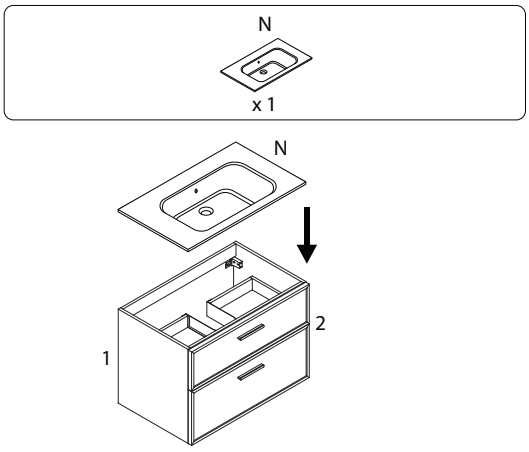
N
x 1
N
2
1

35

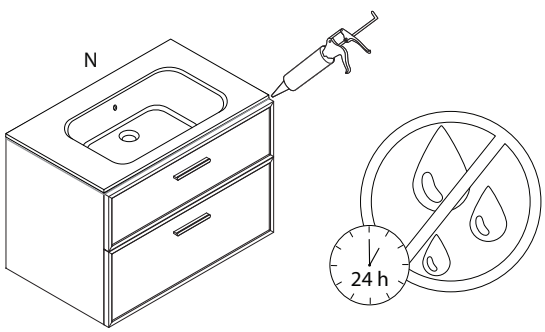
N
24 h