BUTTE

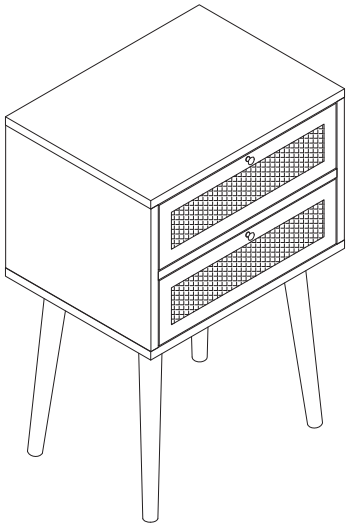

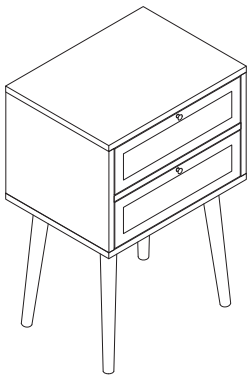

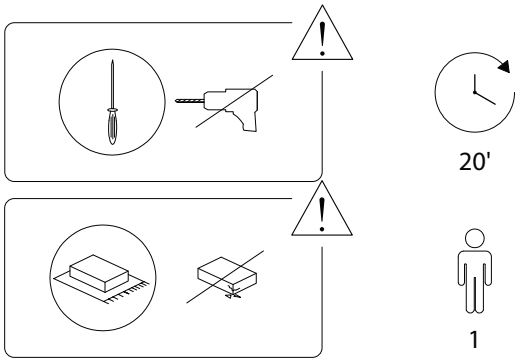

1/11

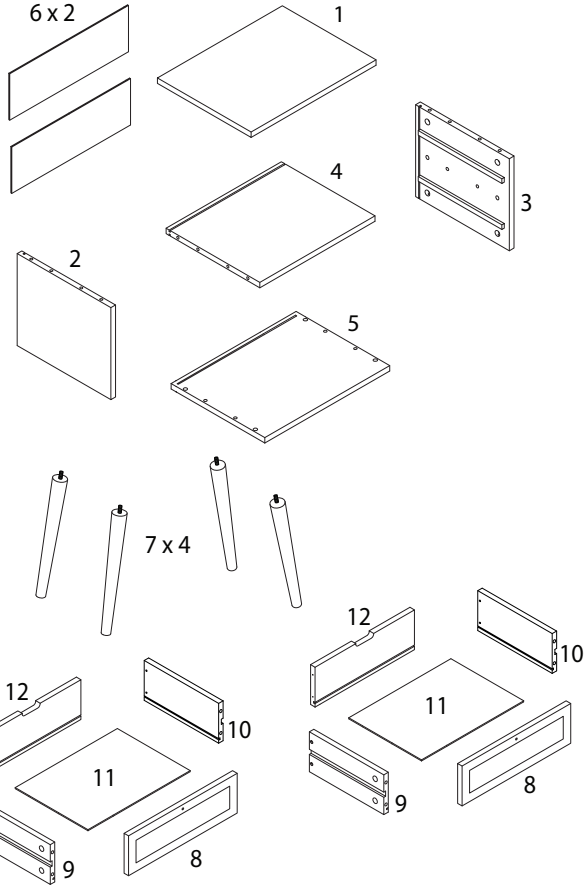

1 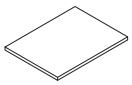 x 1	2 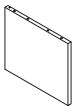 x 1	3 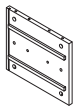 x 1	4 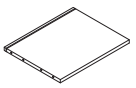 x 1
5 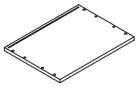 x 1	6 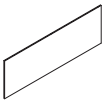 x 2	7  x 4	8 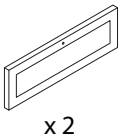 x 2
9  x 2	10  x 2	11 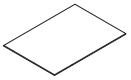 x 2	12 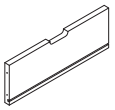 x 2
A  x 20	B  x 20	C  x 12	D  M3 x 30 x 8
E  x 2	F  M3 x 12 x 2	G  M4 x 18 x 2	H  x 2

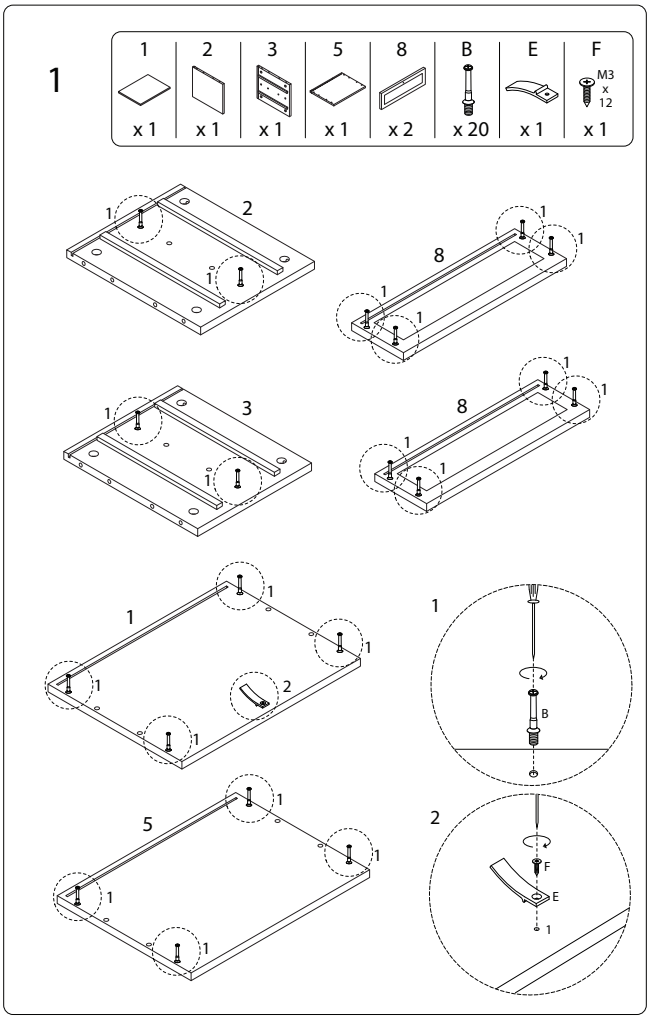
1
1 2 3 5 8 B E F
M3 x 12
x 1 x 1 x 1 x 1 x 2 x 20 x 1 x 1
2
8
3
8
1
5
1
2
B
F
E

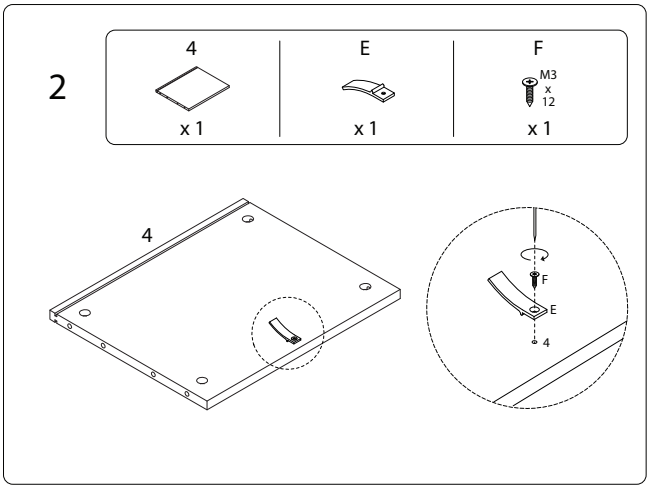
2
4 E F
M3 x 12
x 1 x 1 x 1
4
F
E
4

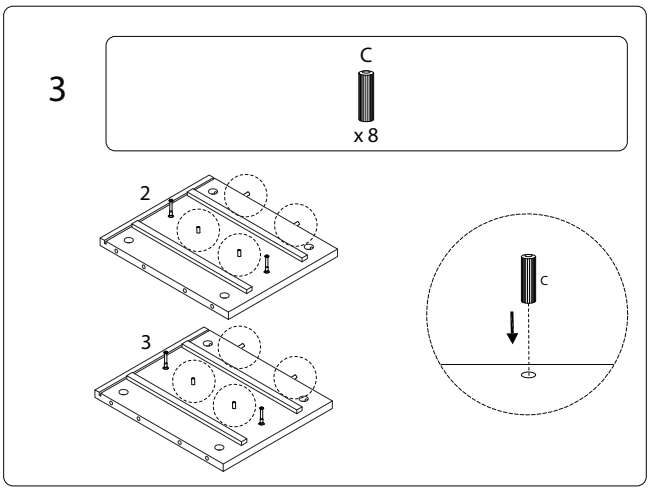
3
C
x 8
2
3
C

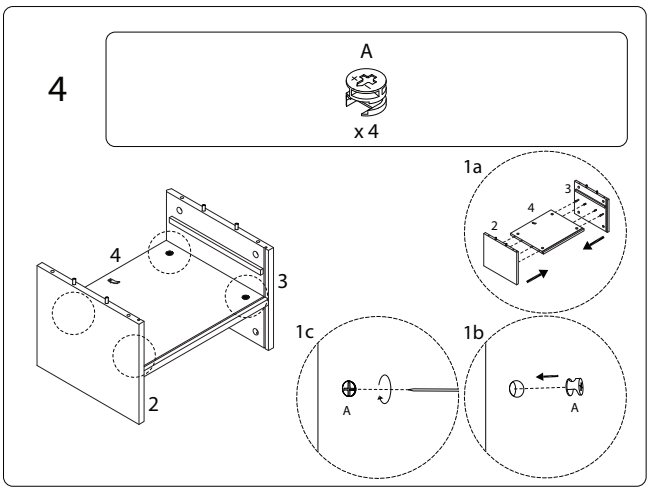
4
A
x 4
1a
1c
1b
A
A
4
3
2

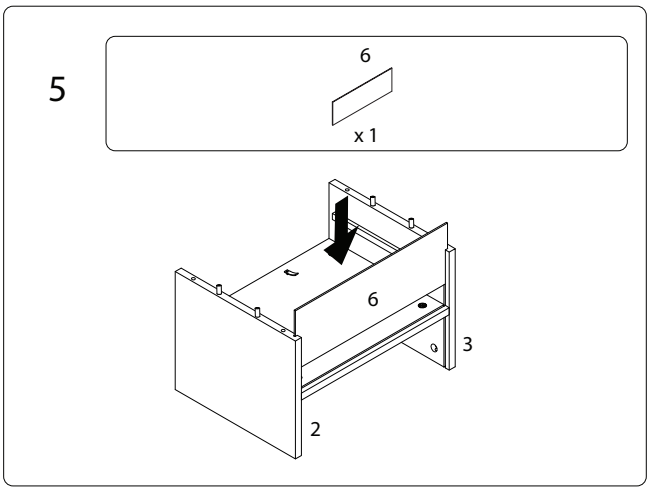
5
6
x 1
6
3
2

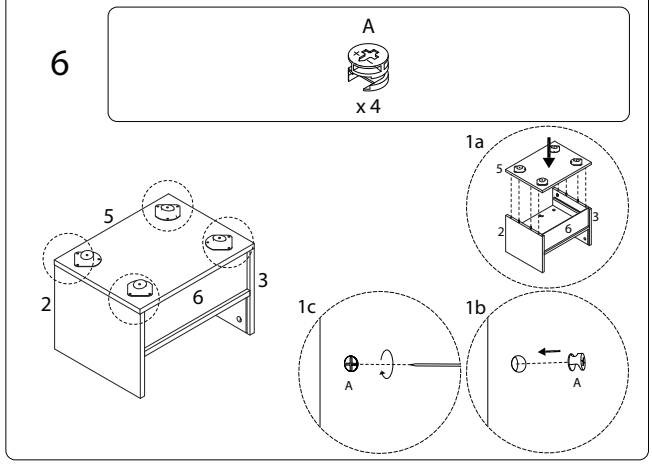
6
A
x 4
1a
1c
1b
A
A
5
3
2
6

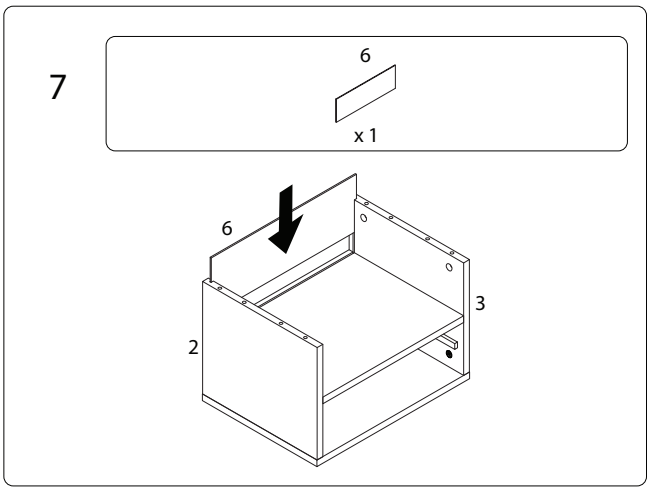
7
6
x 1
6
3
2

8

C
x 4

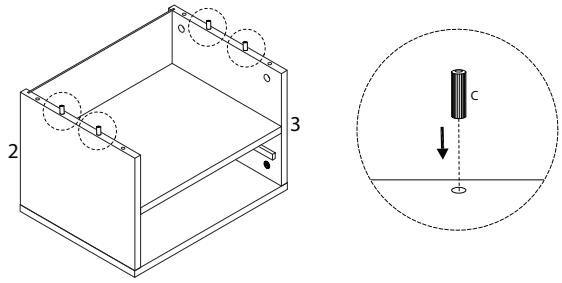

10 x 2

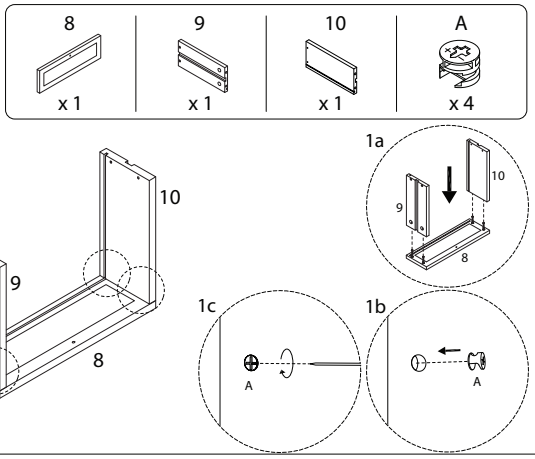

9

A
x 4

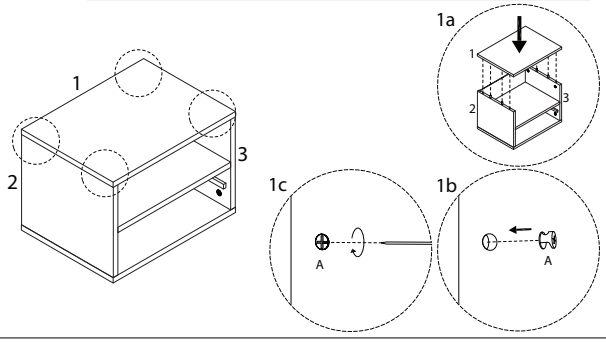

11 x 2

11
x 1

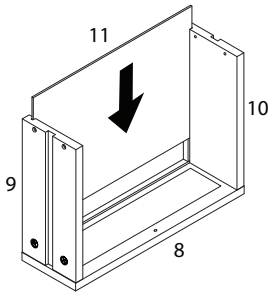

2364/BUTTE/290525/

2364/BUTTE/290525/

12 x 2

12
x 1

D
M3 x 30
x 4

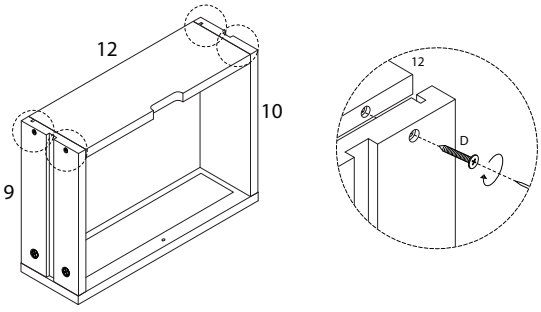

14

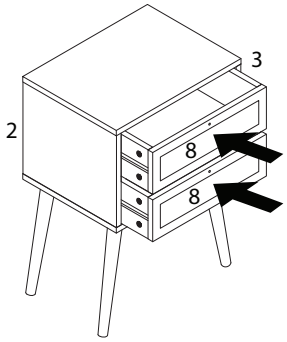

13

7
x 4

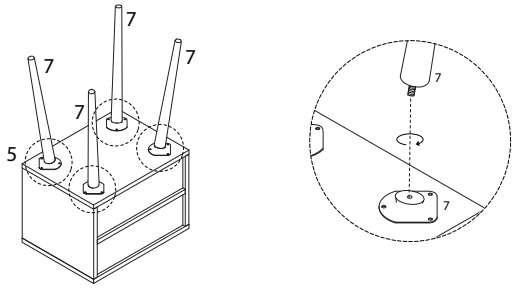

15

G
M4 x 18
x 2

H
x 2

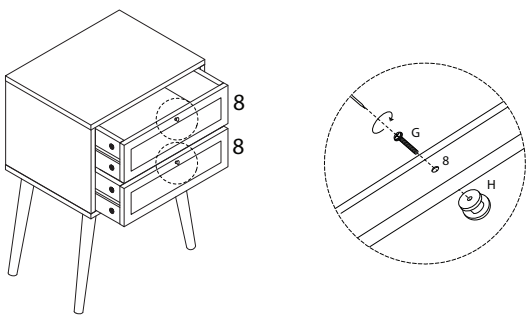

2364/BUTTE/290525/

2364/BUTTE/290525/