NIVO

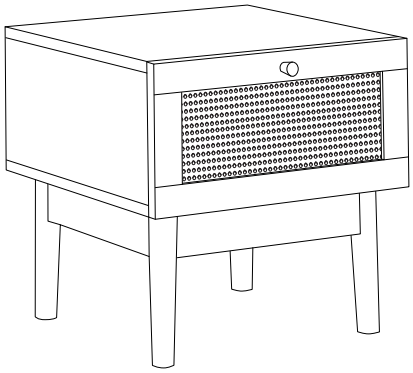

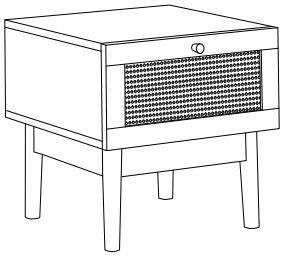

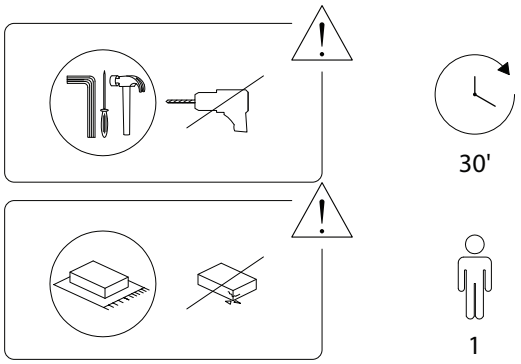

1/15

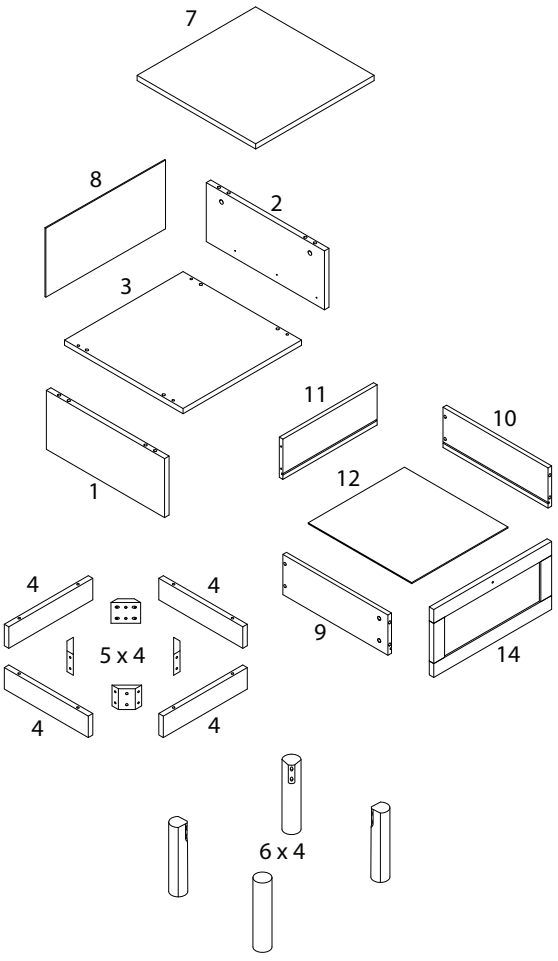

2/15

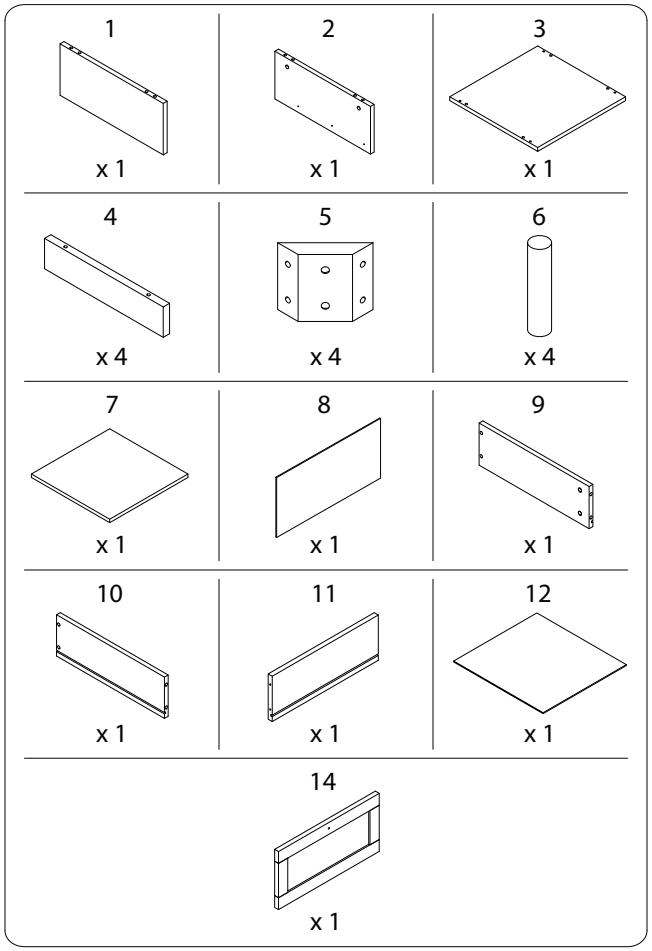

3/15

A	B	C	C_L	C_R
		 M3.5 x 12	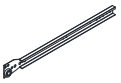	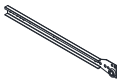
x 4	x 4	x 10	x 1	x 1

D	D_L	D_R	E	F
			 M4 x 40	 M4 x 25
x 8	x 1	x 1	x 4	x 16

G	H	I	J	K
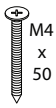 M4 x 50		 M6 x 45		
x 8	x 4	x 8	x 1	x 4

L	M	O	P	Q
		 M4 x 30		 M4 x 20
x 4	x 10	x 4	x 1	x 1

R



x 4

1

1	2	C	C_L	C_R
x 1	x 1	M3.5 x 12 x 6	x 1	x 1

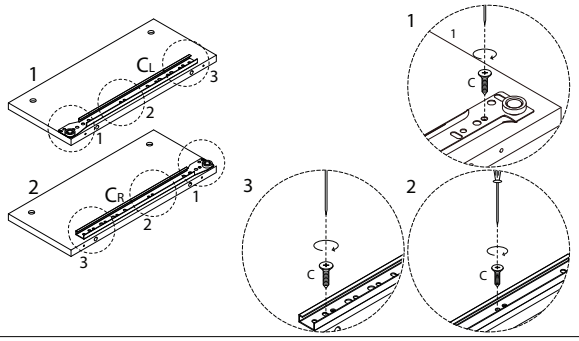

2

D

x 4

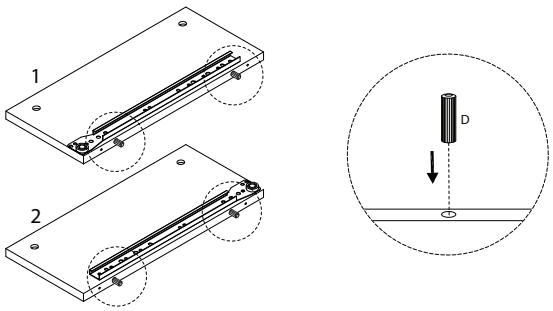

3

3	E
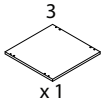	 M4 x 40
x 1	x 4

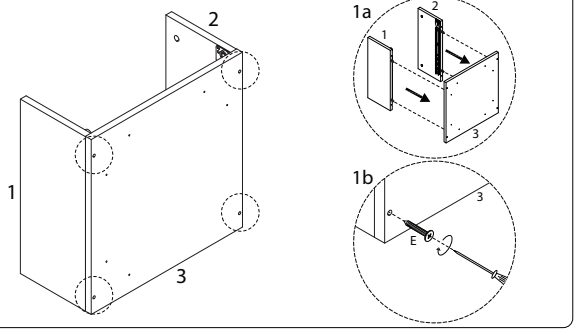

5

G

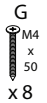 M4 x 50

x 8

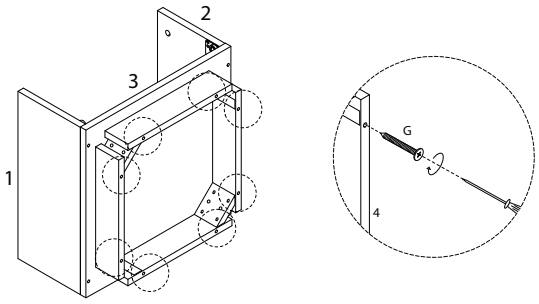

4

4	5	F
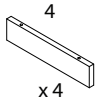	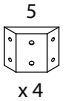	 M4 x 25
x 4	x 4	x 16

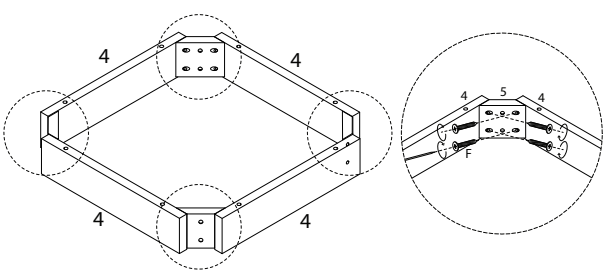

6

6	I	J
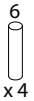	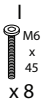 M6 x 45	
x 4	x 8	x 1

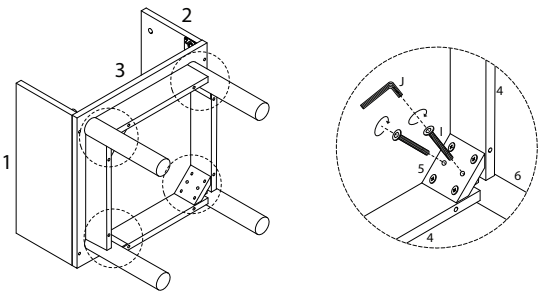

7

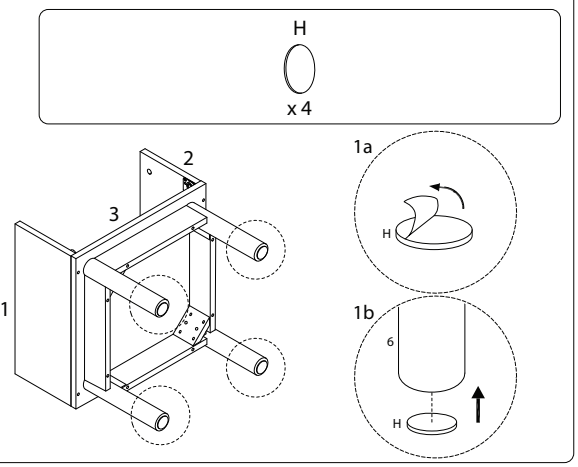

8

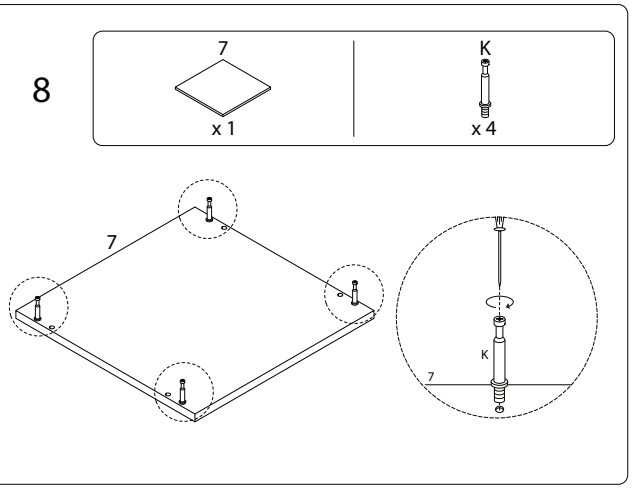

8/15

1273/NIVO/010825/

9

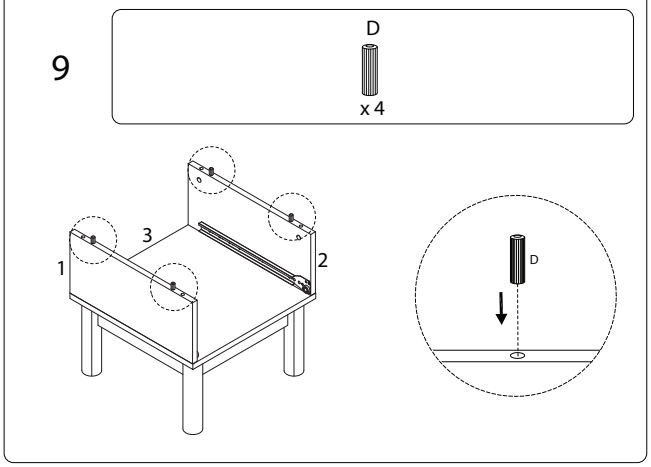

10

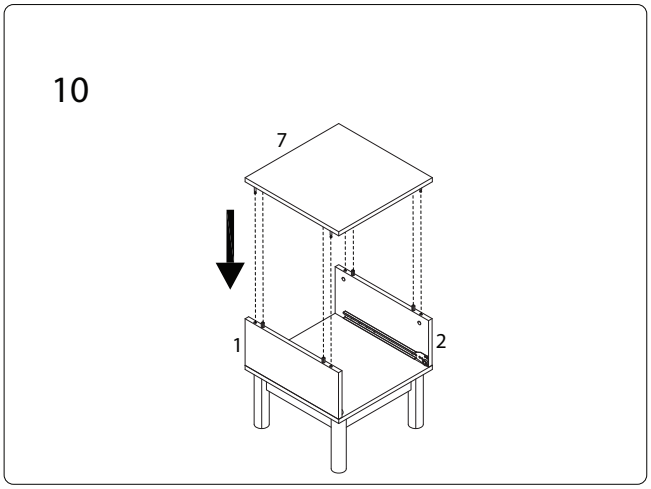

9/15

1273/NIVO/010825/

11

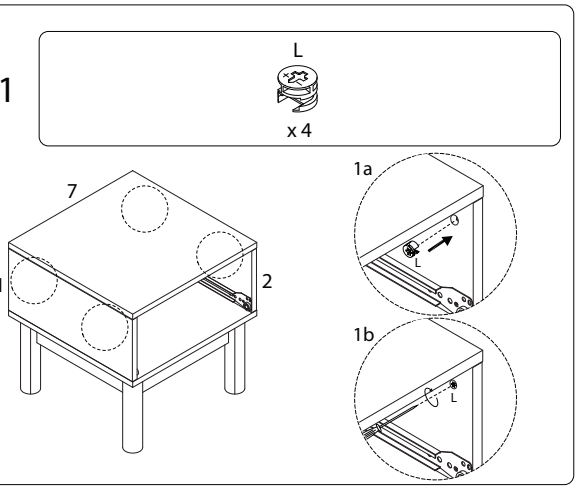

12

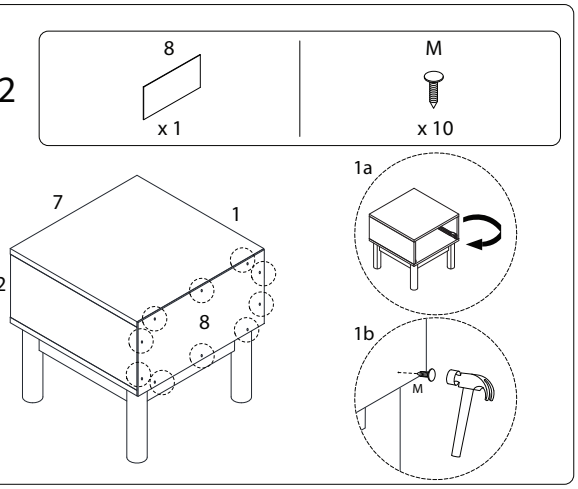

10/15

1273/NIVO/010825/

13

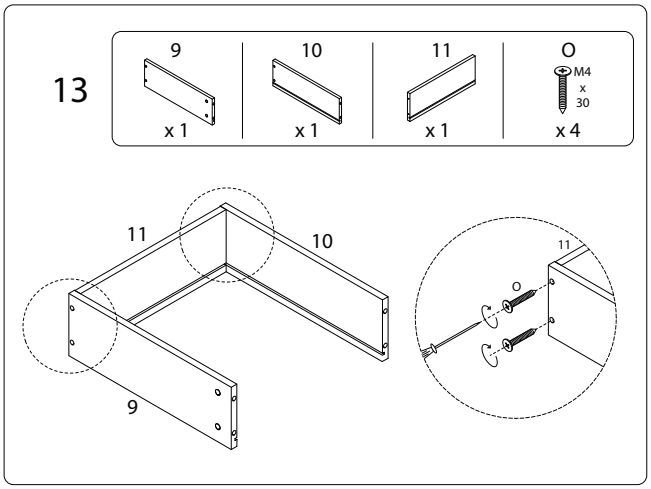

14

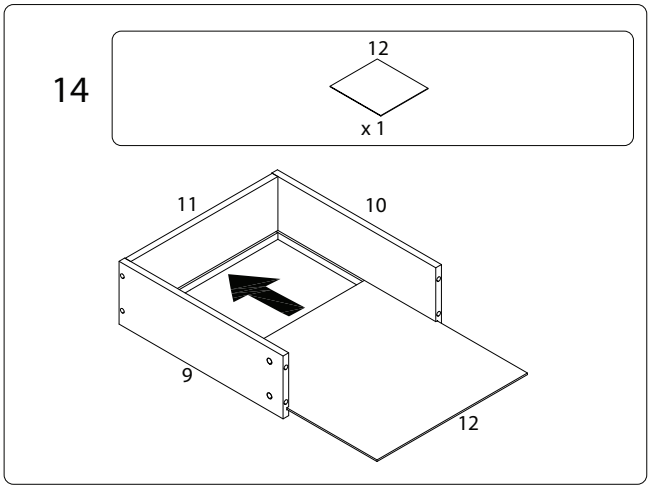

11/15

1273/NIVO/010825/

15

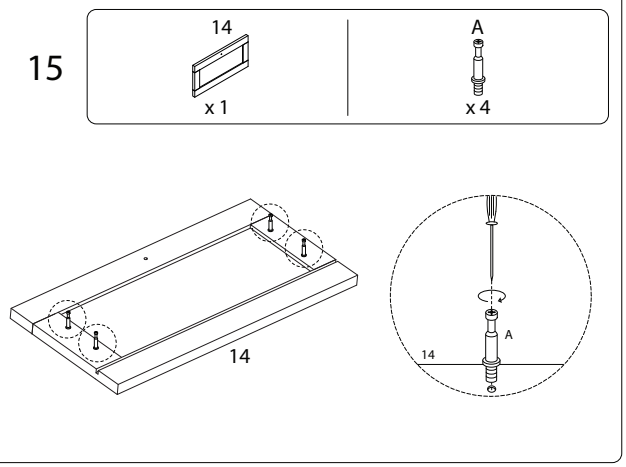

16

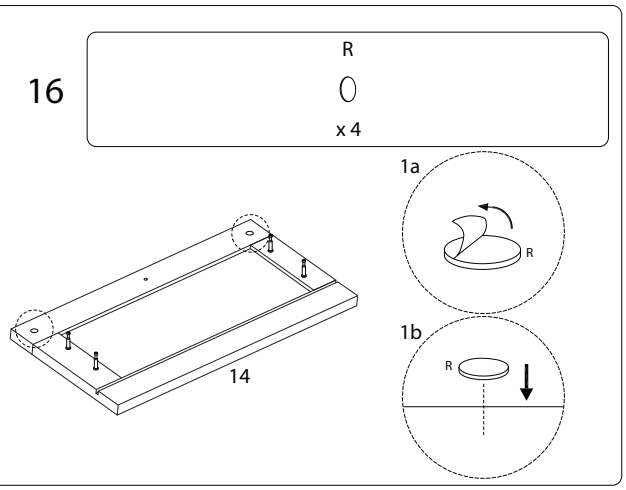

17

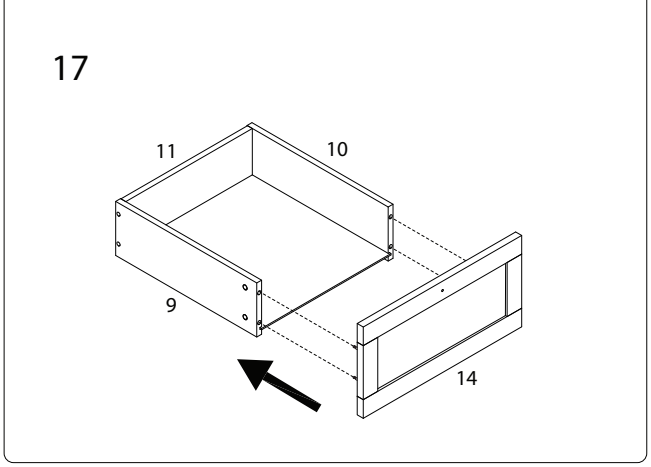

18

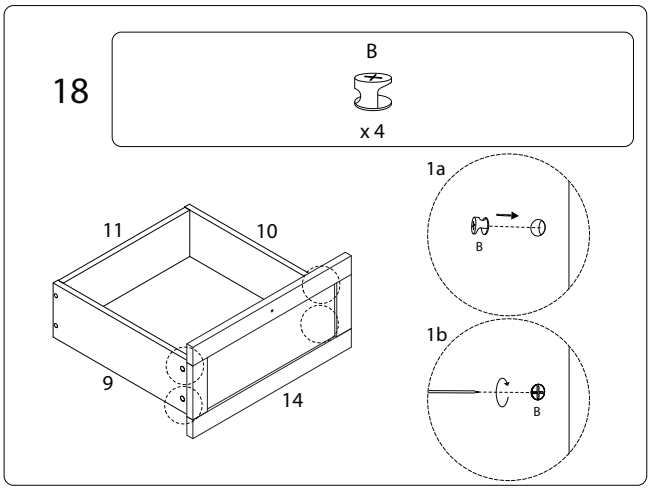

19

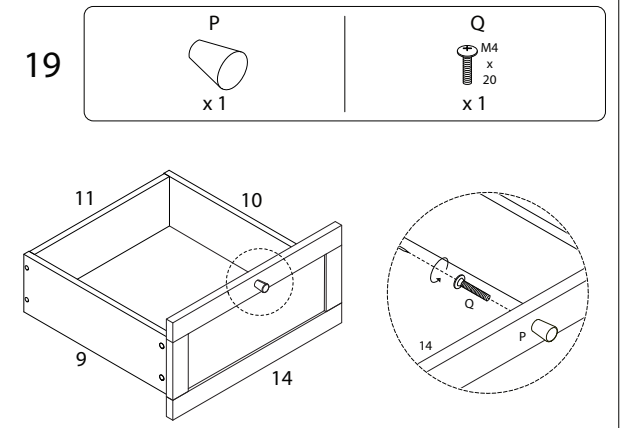

20

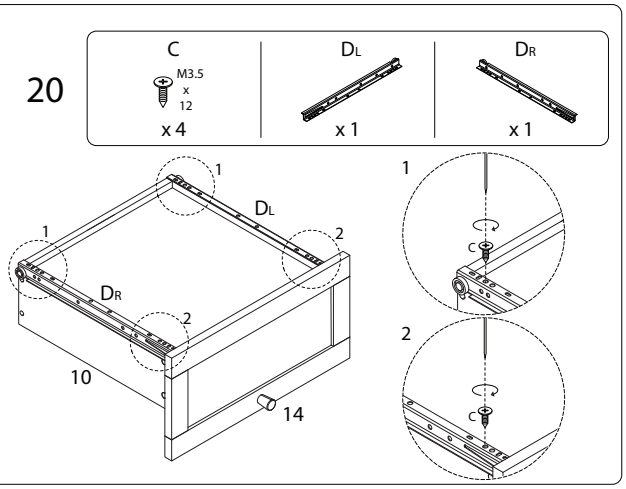

21

