GIBSON

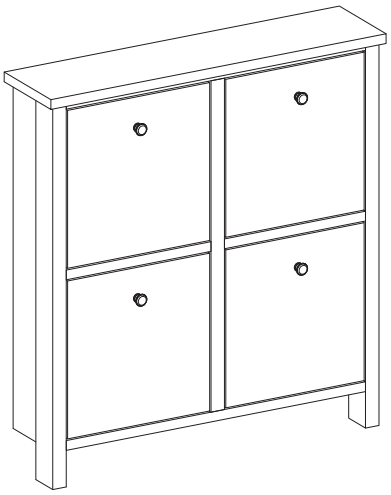



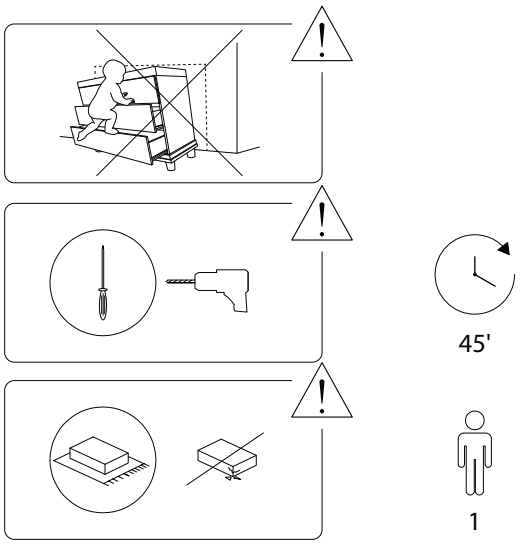

1/14

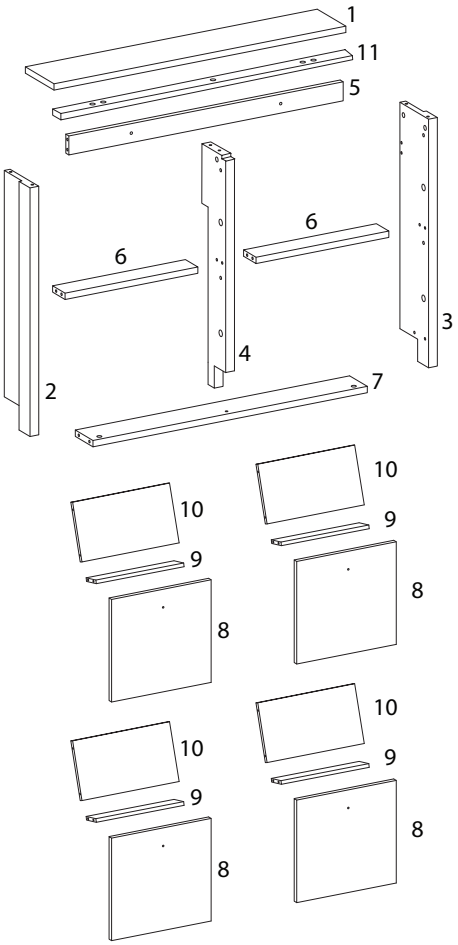

1  x 1		2  x 1	
3  x 1		4  x 1	
5 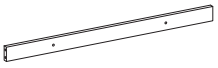 x 1		6 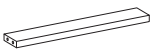 x 2	
7 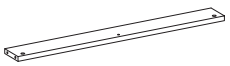 x 1		8 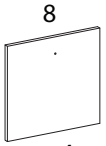 x 4	
9  x 4	10 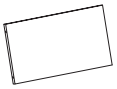 x 4		11  x 1

A	B	C
 x 13	 x 13	 x 9
D	E	F
 x 8	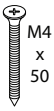 x 2	 x 8
G	H	I
 x 2	 x 24	 x 4
J	K	L	M
 x 4	 x 4	 x 4	 x 2
N	O	P	Q
 x 8	 x 32	 x 2	 x 3

1

1	5	6	7	C	P
x 1	x 1	x 2	x 1	 x 9	 x 2

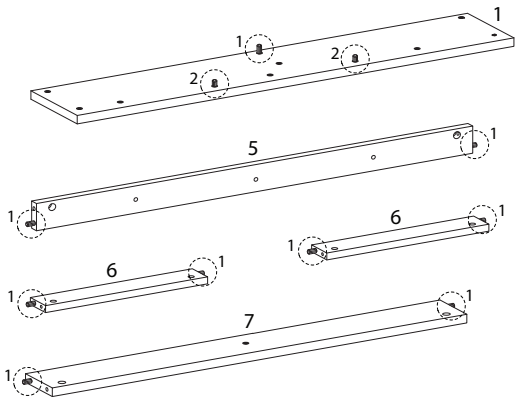

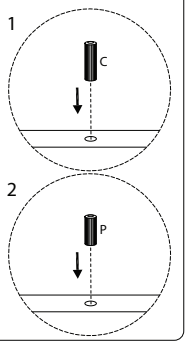

2

11	Q
 x 1	 x 3

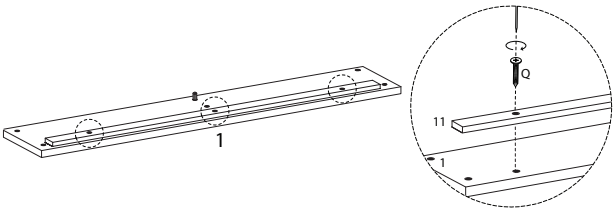

4

4	A	D
 x 1	 x 2	 x 4

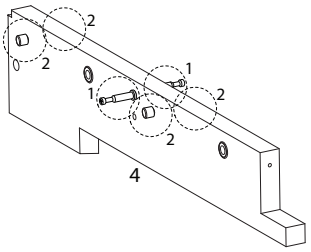

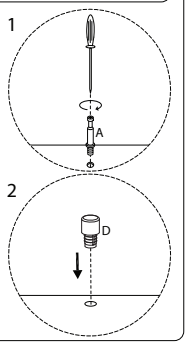

3

2	3	A	D
 x 1	 x 1	 x 11	 x 4

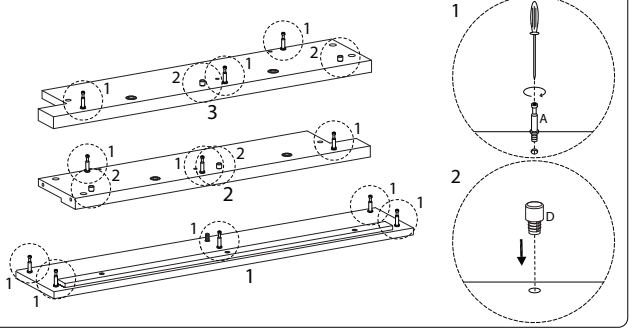

5

B
 x 2

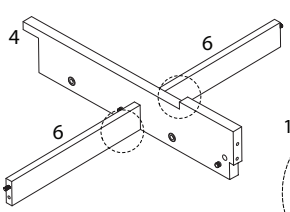

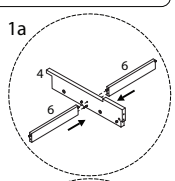

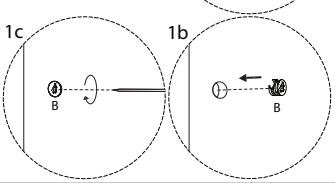

6

G
M4 x 30
x 1

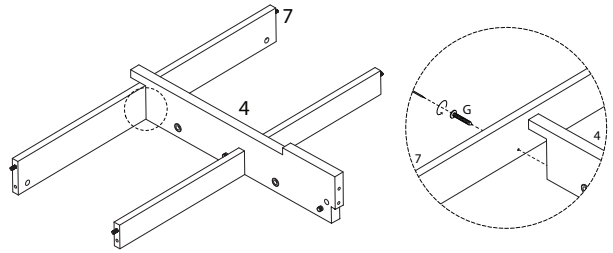

9

G
M4 x 30
x 1

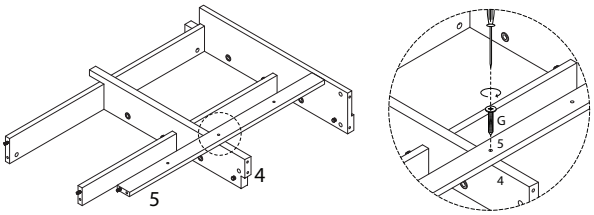

7

B
x 3

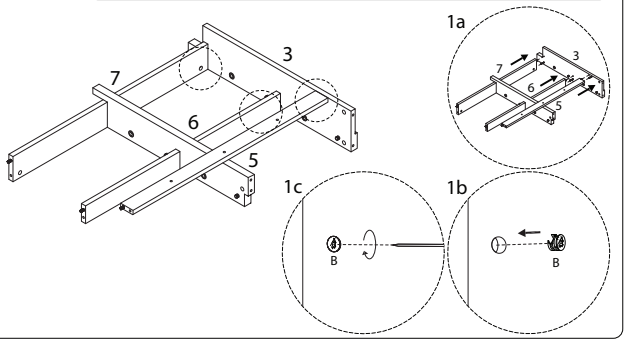

1025/GIBSON/070325/

10

B
x 3

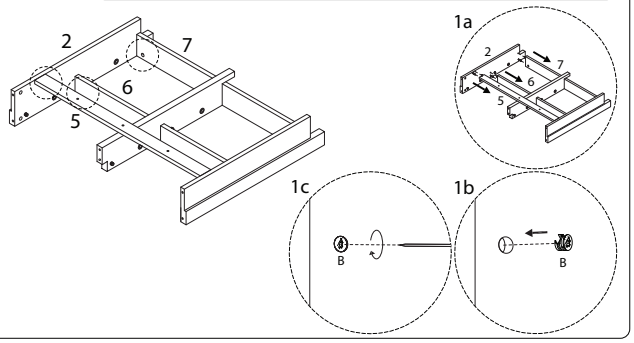

1025/GIBSON/070325/

11

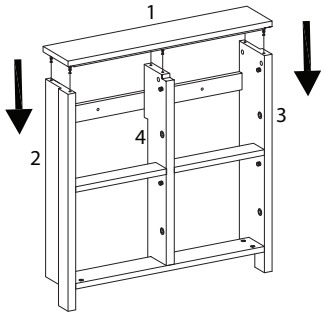

13

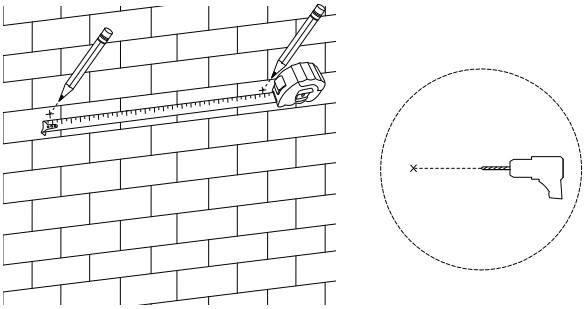

12

B
x 5

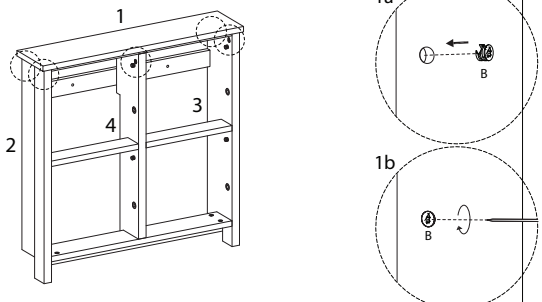

1025/GIBSON/070325/

14

E
M4 x 50
x 2

M
x 2

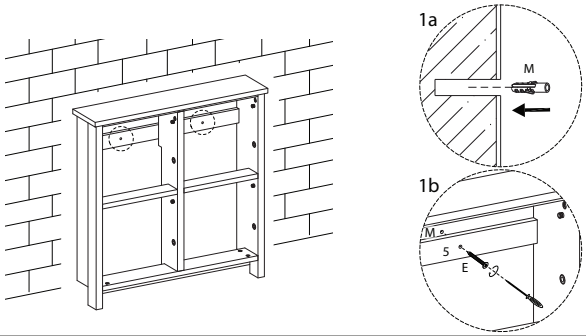

1025/GIBSON/070325/

15 x 4

8	H	K	L
x 1	x 6	x 1	x 1

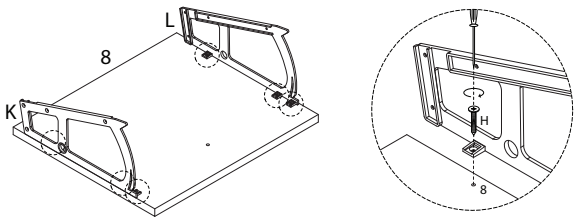

16 x 4

9	O
x 1	x 4

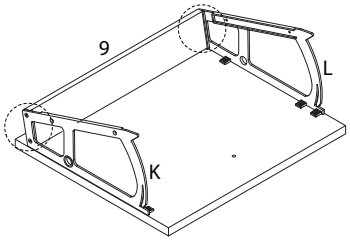

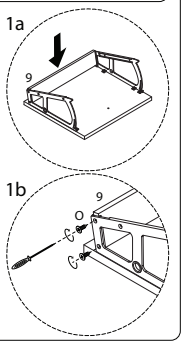

17 x 4

10	O
x 1	x 4

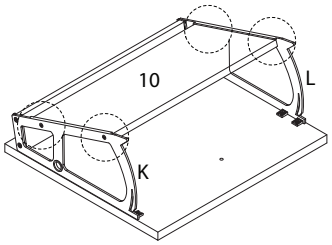

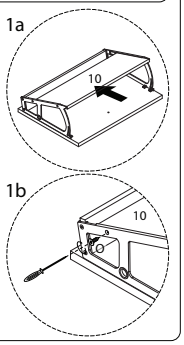

18 x 4

I	J
x 1	x 1

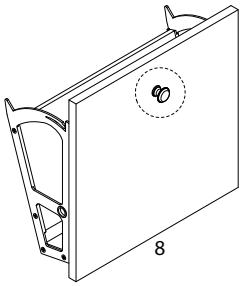

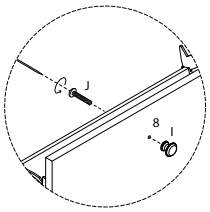

19

F	N
x 8	x 8

