# SKIEN

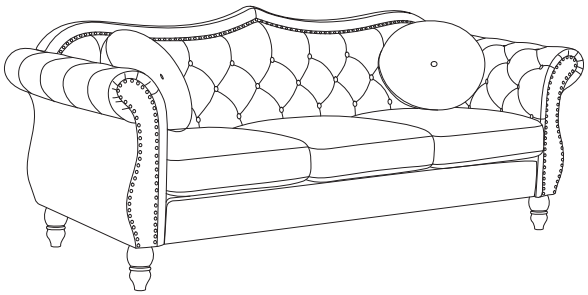

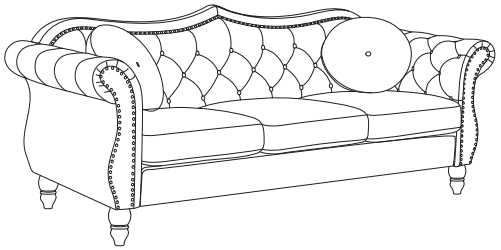

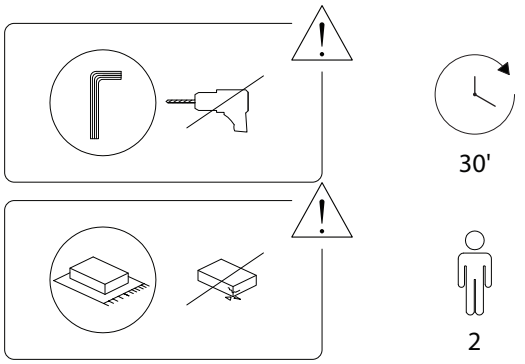






1352/SKIEN/301225/

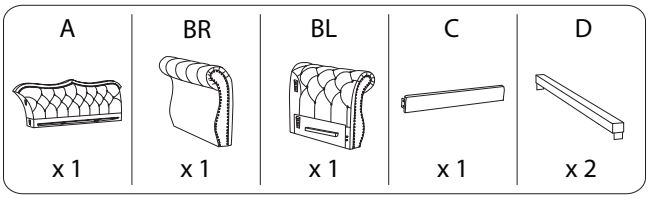


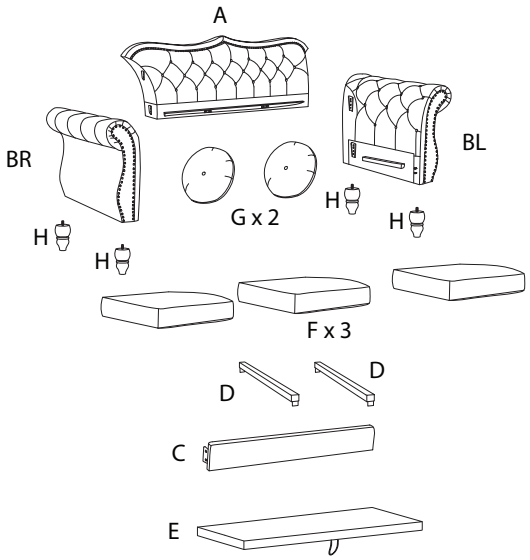


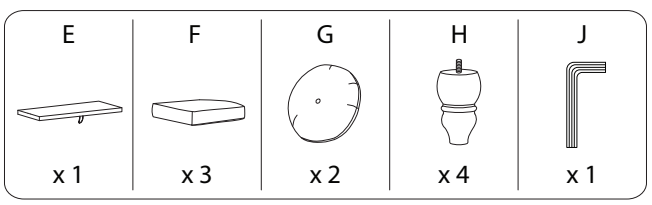




1352/SKIEN/301225/

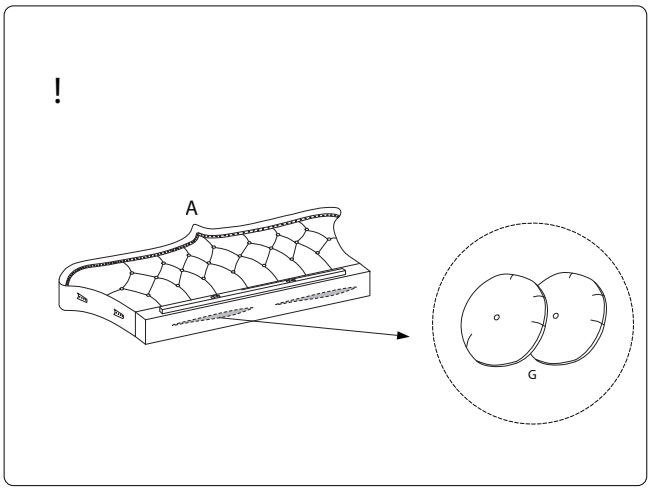


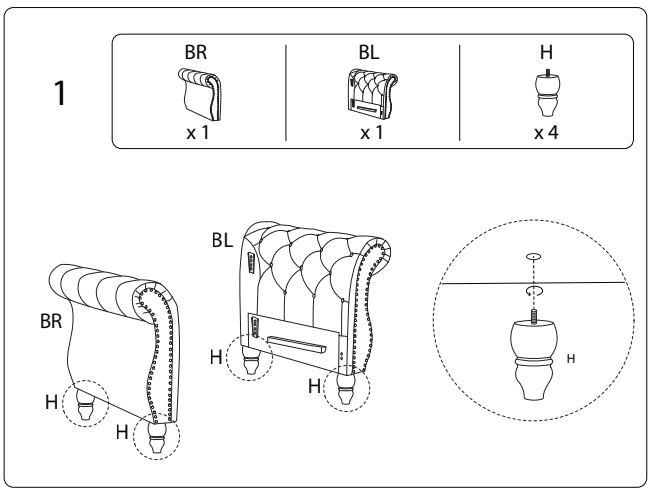




1352/SKIEN/301225/

2

A

x 1

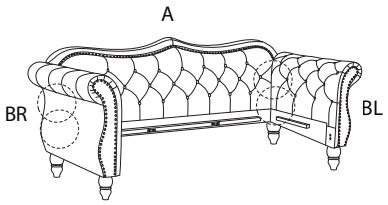


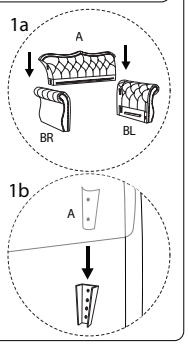


3

C

x 1

J

x 1

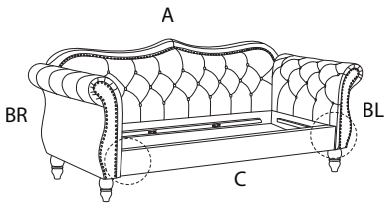


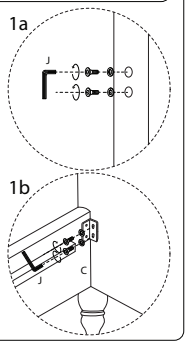


5/7

1352/SKIEN/301225/

4

D

x 2

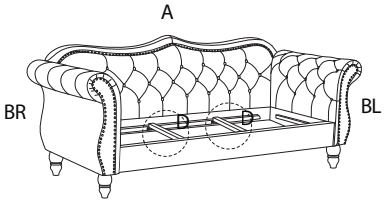


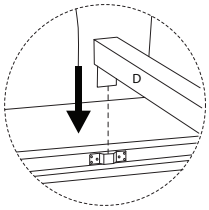


5

E

x 1

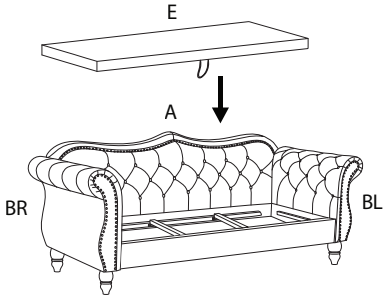


6/7

1352/SKIEN/301225/

6

F

x 2

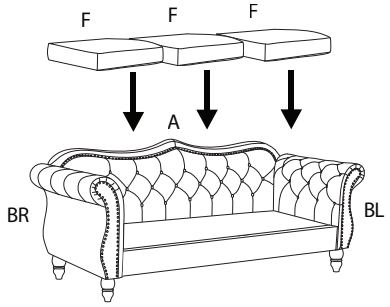


7/7

1352/SKIEN/301225/