DESTIN

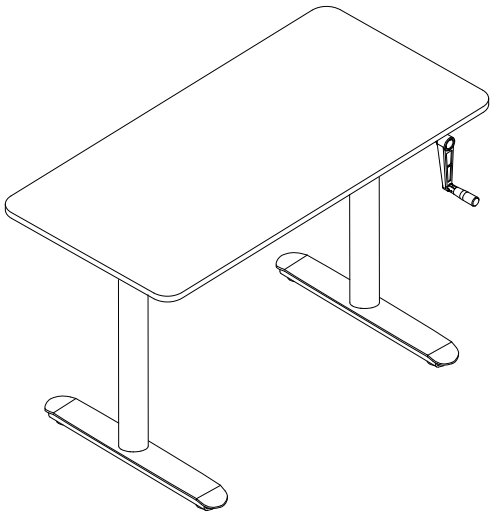

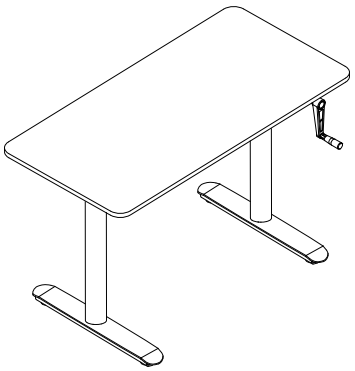

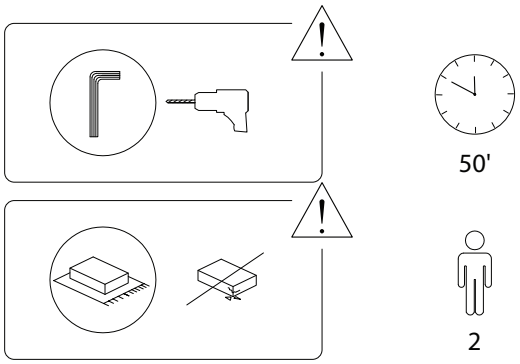

1/10

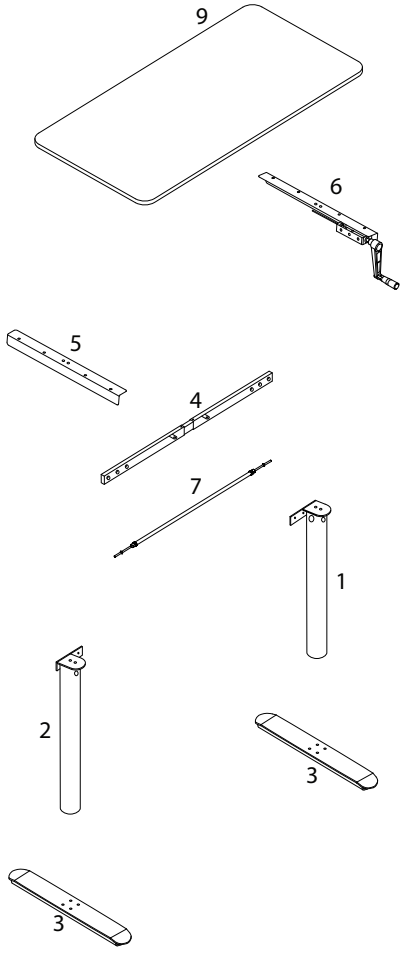

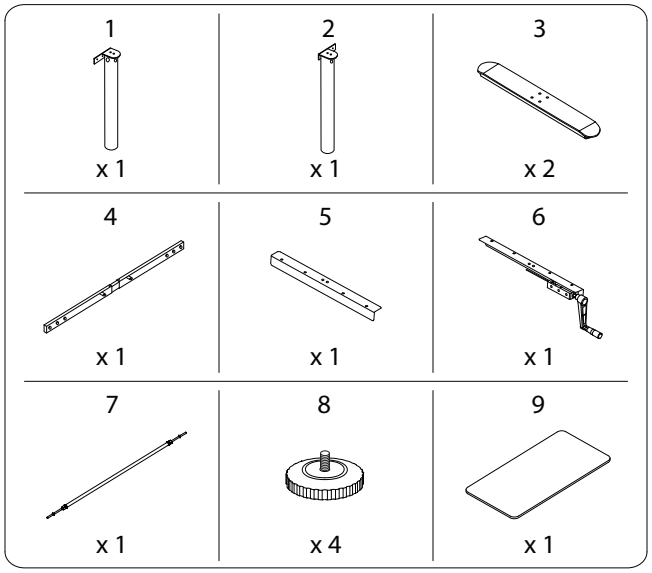

2/10

3/10

A	B	C
M6 x 12	M6 x 16	M6 x 8
x 8	x 8	x 4
D	**E**	**F**
M6 x 14	M6 x 8	
x 10	x 4	x 1

G



x 10

1

1	2	4	A	F
x 1	x 1	x 1	M6 x 12 x 6	x 1

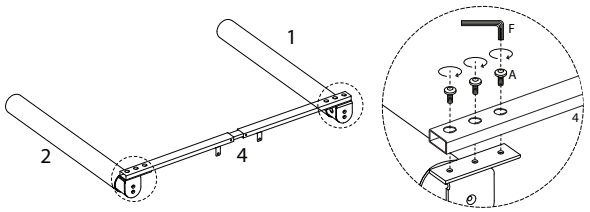

2

3	8	B	F
x 2	x 4	M6 x 16 x 8	x 1

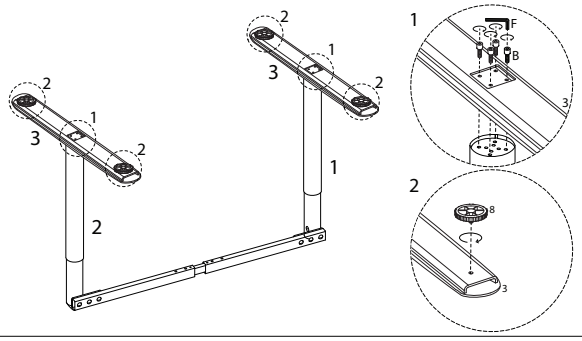

3

6	C	F
x 1	M6 x 8 x 2	x 1

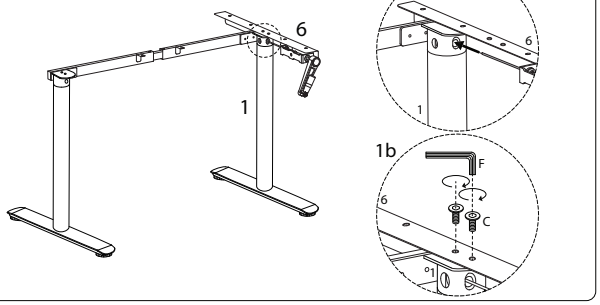

4

5	C	F
x 1	M6 x 8 x 2	x 1

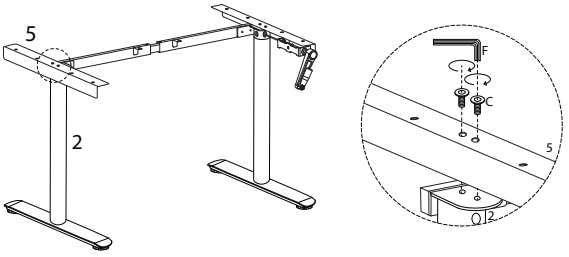

5

7
x 1

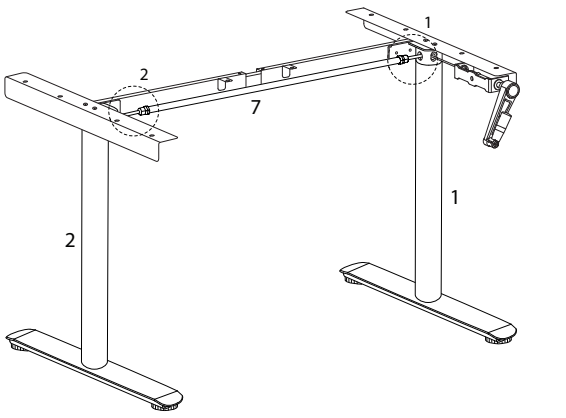

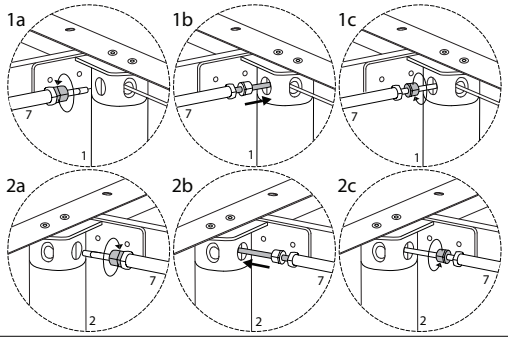

6

G

x 10

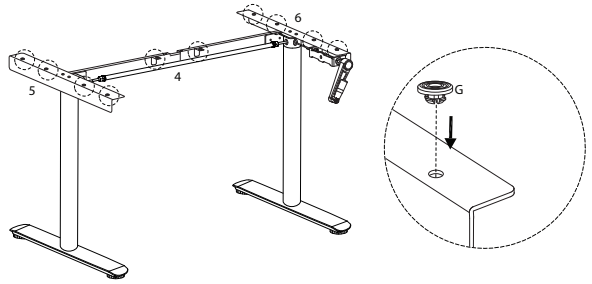

8

E

M6 x 8

x 4

F

x 1

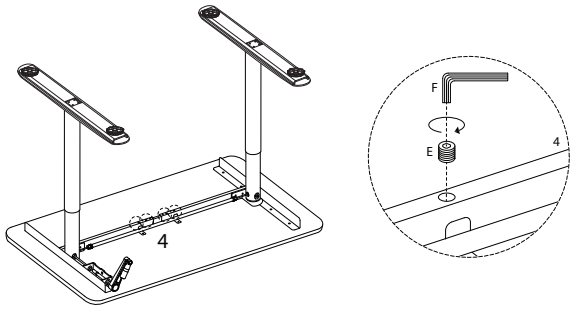

7

5

x 1

D

M6 x 14

x 10

F

x 1

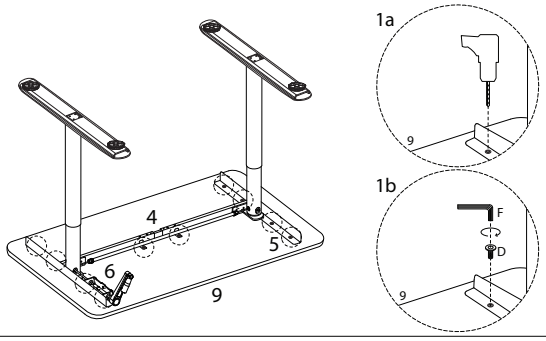

8/10

2109/DESTIN/020224/

9/10

2109/DESTIN/020224/

!

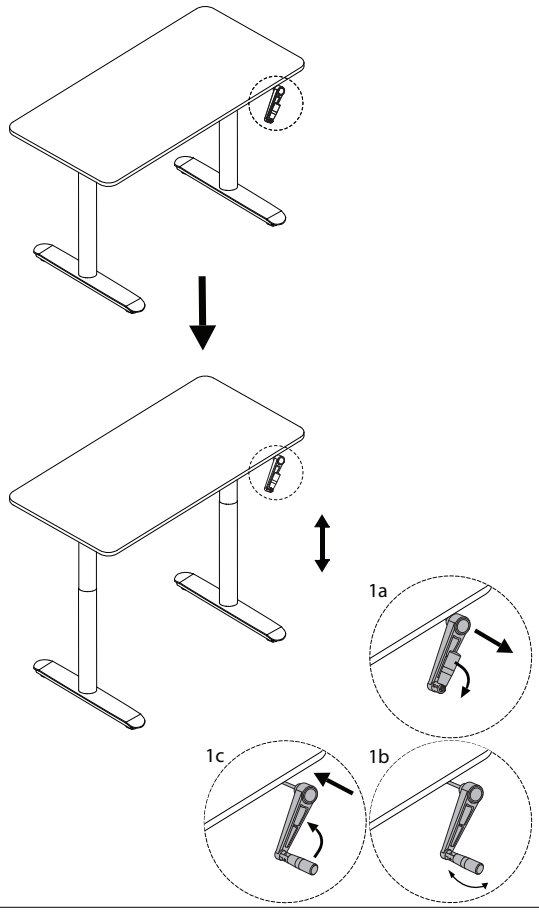

10/10

2109/DESTIN/020224/