Montageanleitung | Instructionsde montage Assembly Instructions | Instruccionesde montaje

SKUNUMBER:
N879P470276/N879P470277

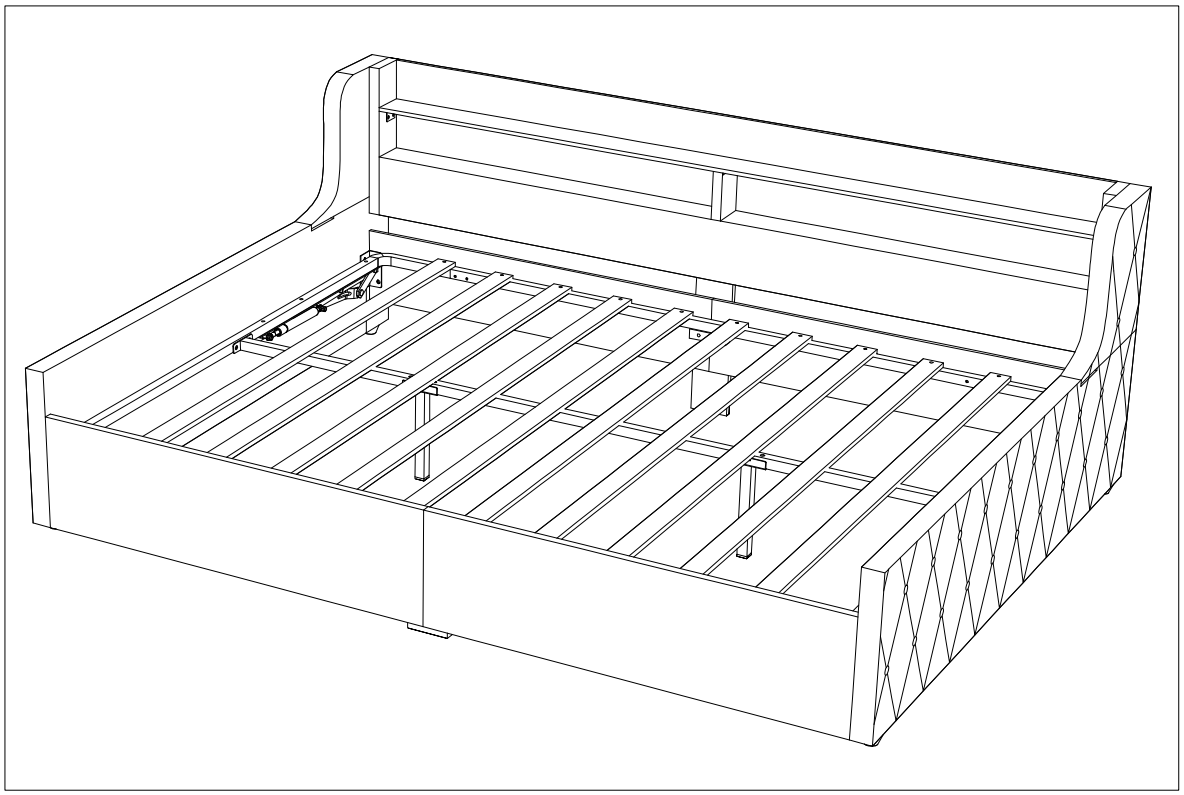

DE Unser Produkt wird Ihnen in 2 Paketen geliefert. Die Lieferzeiten dieser 2 Pakete können abweichen, bitte haben Sie etwas Geduld und vielen Dank für Ihr Verständnis.

UK Our product will be delivered to you in 2 packages. The delivery times of these 2 packages may differ, please be patient and thank you for your understanding.

FR Notre produit vous sera livré en 2 colis. Les délais de livraison de ces 2 colis peuvent différer, soyez patient et merci pour votre compréhension.

FR Cet appareil, ses cordons, et batterie se recyclent
À DÉPOSER EN MAGASIN OU À DÉPOSER EN DÉCHÈTERIE
Points de collecte sur www.quefairedemesdechets.fr
Privilégiez la réparation ou le don de votre appareil !

DE: Vor dem Einbau die Schrauben in die Löcher stecken und festziehen, aber nicht bis 100%, 70% bis 80% anziehen reicht aus. Schließlich, nachdem alle Schrauben installiert sind, ziehen Sie alle Schrauben auf 100 %.Wenn Sie auf diese Probleme stoßen, wie z. B. Fehlausrichtung der Löcher oder Unfähigkeit, bestimmte Teile zu installieren, überprüfen Sie bitte, ob die Schrauben korrekt verwendet werden und passen Sie die Dichtigkeit der Schrauben an.

UK: Before installation, insert the screws into the holes and tighten them, but do not tighten them to 100%, 70% to 80% is sufficient. Finally, after all screws are installed, tighten all screws to 100%.If you encounter these issues, such as if the holes cannot be aligned or some parts cannot be installed, please check if the screws are used correctly and adjust the tightness of the screws.

FR: Insérer la vis dans le trou avant la fin de l'assemblage, serrer la vis, mais ne pas serrer à 100%, 70% ~ 80% est correct. Enfin, une fois que toutes les vis sont bien serrées, toutes les vis sont serrées à 100%.Si vous rencontrez ces problèmes, par exemple si les trous ne sont pas alignés ou si certaines pièces ne peuvent pas être montées, vérifiez que les vis sont utilisées correctement et Ajustez leur serrage.

English

IMPORTANT FOR GAS LIFT BEDS&MAINTAINCE

- Please place the mattress on top of the bed frame.
- Please do not pull on the strap handles.
- Please press heavily to release the compressed gas.
- Periodically check all screw & fixings to ensure they are secure.
- When moving your product, carefully lift into place.
- Wipe clean with a slightly damp cloth- please do not use abrasive chemicals or bleach.
- Do NOT allow children to operate the lift mechanism.
- Do NOT allow children near the lift base when operating the mechanism.
- Do NOT stand inside the bed or the internal storage base.
- Do NOT overload the internal storage base.
- DO NOT jump on the product or any of its parts.

Deutsch

WICHTIG FÜR GASLIFT-BETTEN&WARTUNG

- Bitte legen Sie die Matratze oben auf den Bettrahmen.
- Bitte ziehen Sie nicht an den Gurtgriffen.
- Bitte drücken Sie kräftig, um das komprimierte Gas freizusetzen.
- Überprüfen Sie regelmäßig alle Schrauben und Befestigungen, um sicherzustellen, dass sie sicher sind.
- Wenn Sie Ihr Produkt bewegen, heben Sie es vorsichtig an seinen Platz.
- Mit einem leicht feuchten Tuch abwischen - bitte keine scheuernden Chemikalien oder Bleichmittel verwenden.
- Erlauben Sie Kindern NICHT, den Hebemechanismus zu bedienen.
- Lassen Sie Kinder NICHT in die Nähe des Liftsockels, wenn Sie den Mechanismus bedienen.
- Stellen Sie sich NICHT in das Bett oder in die Innenablage.
- Überlasten Sie den internen Liftsockel NICHT.
- Springen Sie NICHT auf das Produkt oder eines seiner Teile.

Français

IMPORTANT POUR LES LITS À RELEVAGE DE GAZ&MAINTENANCE

- Veuillez placer le matelas sur le dessus du cadre de lit.
- Ne tirez pas sur les poignées de la sangle.
- Appuyez fortement pour libérer le gaz comprimé.
- Vérifiez régulièrement que toutes les vis et fixations sont bien en place.
- Lorsque vous déplacez votre produit, soulevez-le avec précaution pour le mettre en place.
- Nettoyez avec un chiffon légèrement humide - n'utilisez pas de produits chimiques abrasifs ou d'eau de Javel.
- Ne laissez pas les enfants utiliser le mécanisme de levage.
- Ne laissez pas les enfants s'approcher de la base de levage lorsqu'ils actionnent le mécanisme.
- Ne vous tenez PAS à l'intérieur du lit ou de la base de stockage interne.
- Ne surchargez pas la base de stockage interne.
- Ne pas sauter sur le produit ou l'une de ses parties.

Italiano

IMPORTANTE PER I LETTI CON SOLLEVAMENTO A GAS E LA MANUTENZIONE

- Posizionare il materasso sopra la struttura del letto.
- Non tirare le maniglie della cinghia.
- Premere con forza per rilasciare il gas compresso.
- Controllare periodicamente tutte le viti e i fissaggi per assicurarsi che siano saldi.
- Quando si sposta il prodotto, sollevarlo con cautela.
- Pulire con un panno leggermente umido, senza usare prodotti chimici abrasivi o candeggina.
- NON permettere ai bambini di azionare il meccanismo di sollevamento.
- NON permettere ai bambini di avvicinarsi alla base di sollevamento quando si aziona il meccanismo.
- NON sostare all'interno del letto o della base di contenimento interna.
- NON sovraccaricare la base di contenimento interna.
- NON saltare sul prodotto o sulle sue parti.

Español

IMPORTANTE PARA LAS CAMAS ELEVADORAS DE GAS&MANTENIMIENTO

- Coloque el colchón sobre el somier.
- No tire de las asas de la correa.
- Presione con fuerza para liberar el gas comprimido.
- Compruebe periódicamente que todos los tornillos y fijaciones estén bien sujetos.
- Al mover el producto, levántelo con cuidado para colocarlo en su sitio.
- Limpie con un paño ligeramente humedecido; no utilice productos químicos abrasivos ni lejía.
- NO permita que los niños accionen el mecanismo de elevación.
- NO permita que los niños se acerquen a la base elevadora cuando accionen el mecanismo.
- NO se ponga de pie dentro de la cama o de la base de almacenamiento interna.
- NO sobrecargue el somier.
- NO salte sobre el producto ni sobre ninguna de sus piezas.

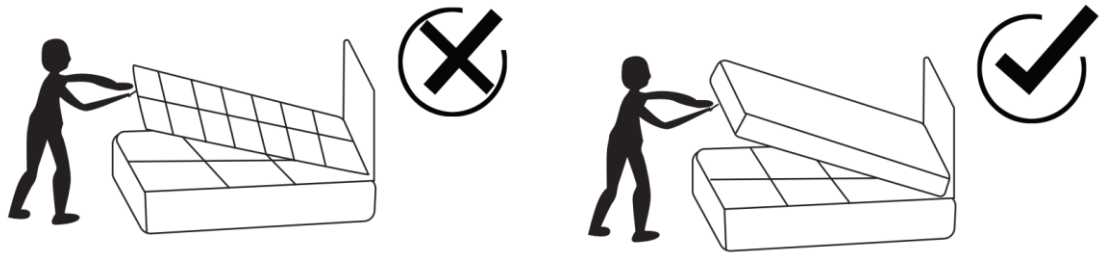

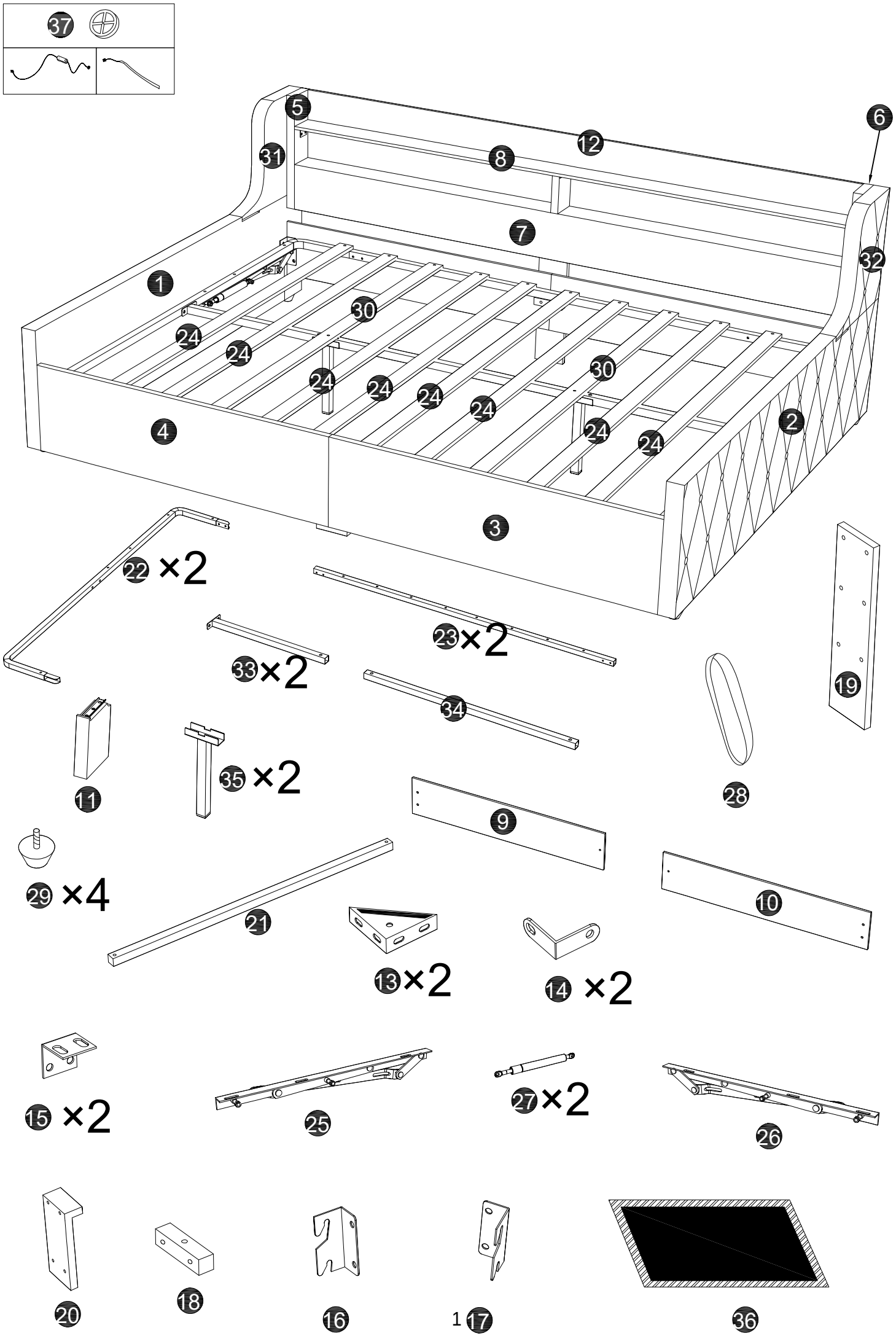
37
5
6
12
31
8
7
32
1
30
24
24
24
24
24
24
30
24
24
4
2
3
22 ×2
23×2
33×2
34
19
11
35 ×2
28
9
29 ×4
10
21
13×2
14 ×2
15 ×2
25
27×2
26
20
18
16
17
36

Part List/ Teileliste/ Liste des pièces
N879P470276

5	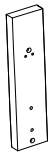	×1	6	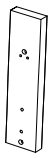	×1
7	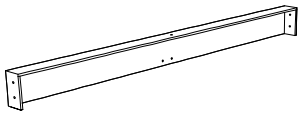	×1	8		×1
11	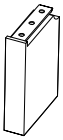	×1	12	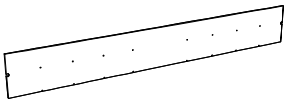	×1
13	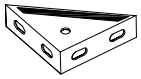	×2	14	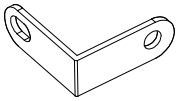	×2
15	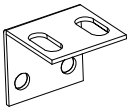	×2	16	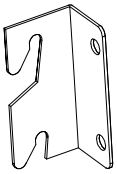	×1
17	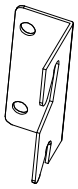	×1	18		×1
19		×1	20		×1
21	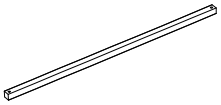	×1	22	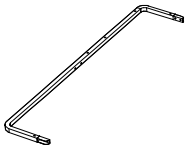	×2
23	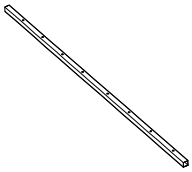	×2	25	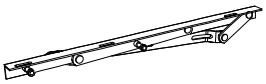	×1

Part List/ Teileliste/ Liste des pièces
N879P470276

26	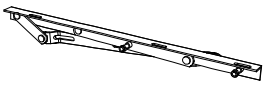	×1
28		×1
36	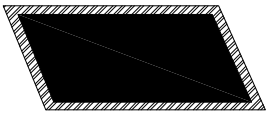	×1

27	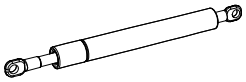	×2
29	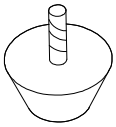	×1
37		×1

Part List/ Teileliste/ Liste des pièces
N879P470277

1	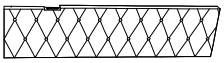	×1	2	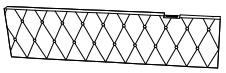	×1
3		×1	4		×1
9	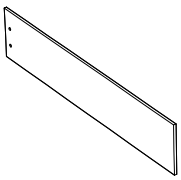	×1	10	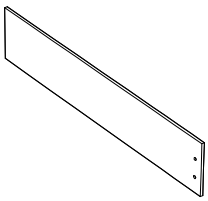	×1
24	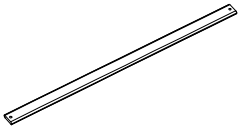	×8	30	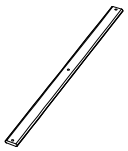	×2
31	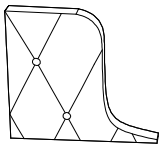	×1	32	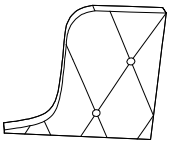	×1

Part List/ Teileliste/ Liste des pièces
N879P470276

A	M8*18MM	×30
B	M8*30MM	×2
C	M8*35MM	×12
D	M8*40MM	×2
E	M8*47MM	×6
F	M8*65MM	×2
G	M8*75MM	×4
H	M6*16MM	×16
I	M6*25MM	×20
J	M6*30MM	×1
K	M8*32MM	×6
L	φ3*25MM	×16
M		×1
N		×6
O		×1

1

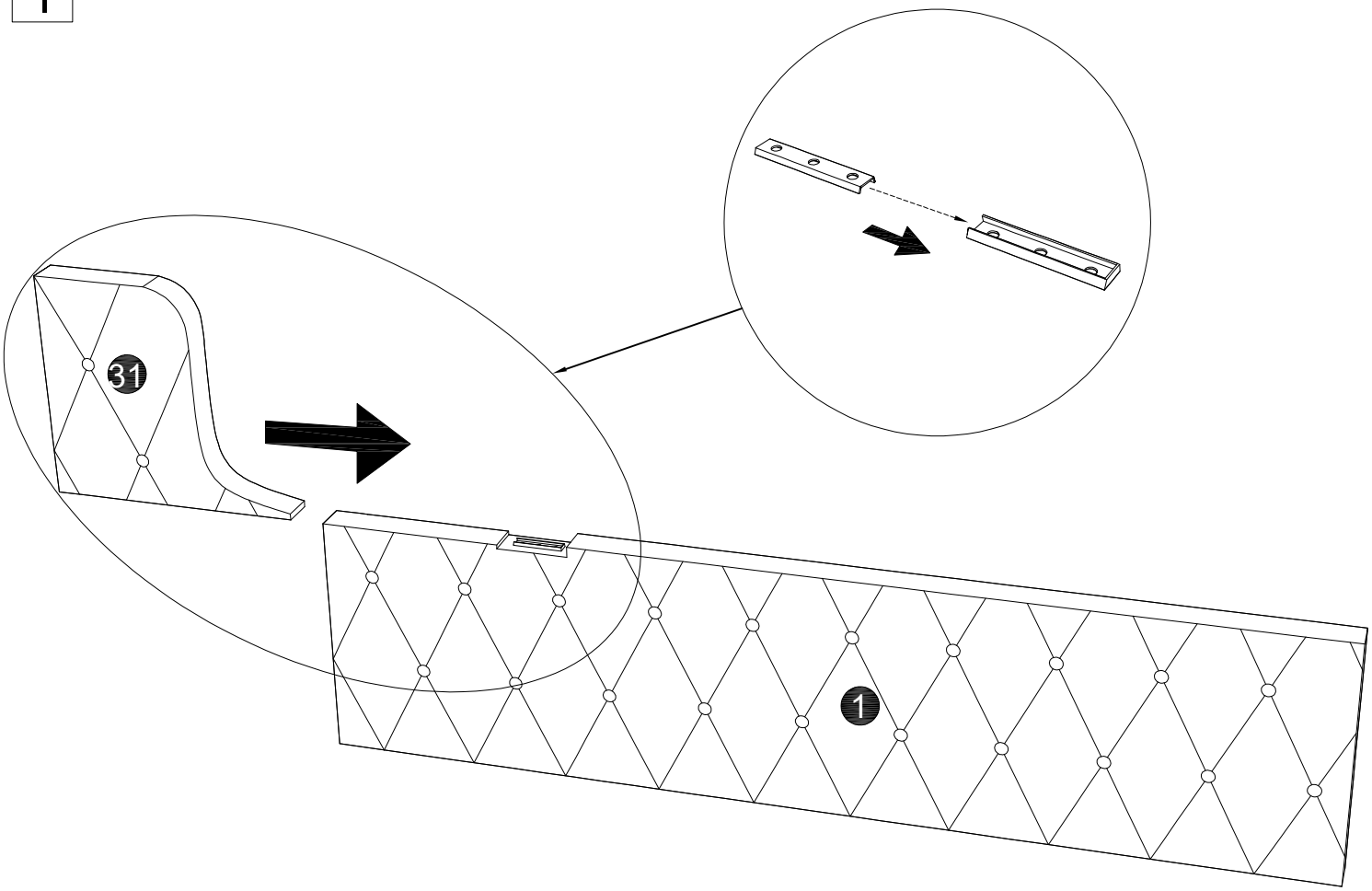

2

M8*18MM	M8*47MM
A×2PCS	E×2PCS

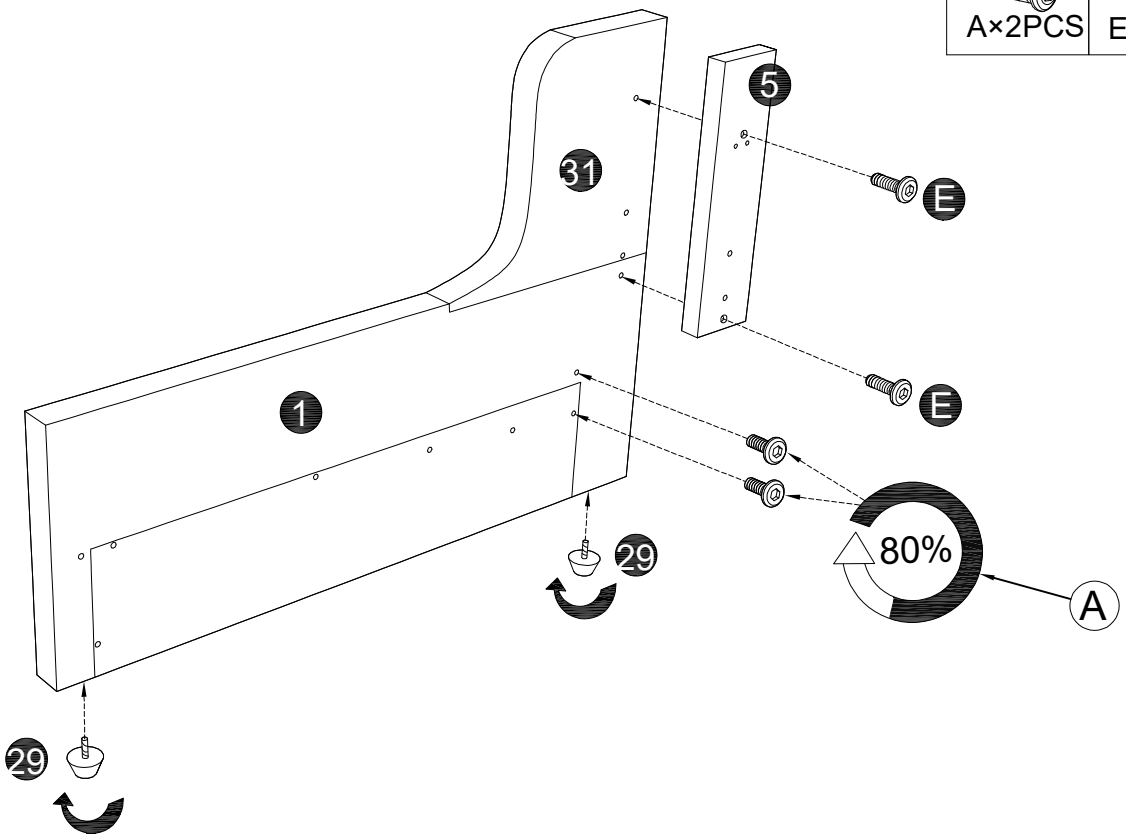

3

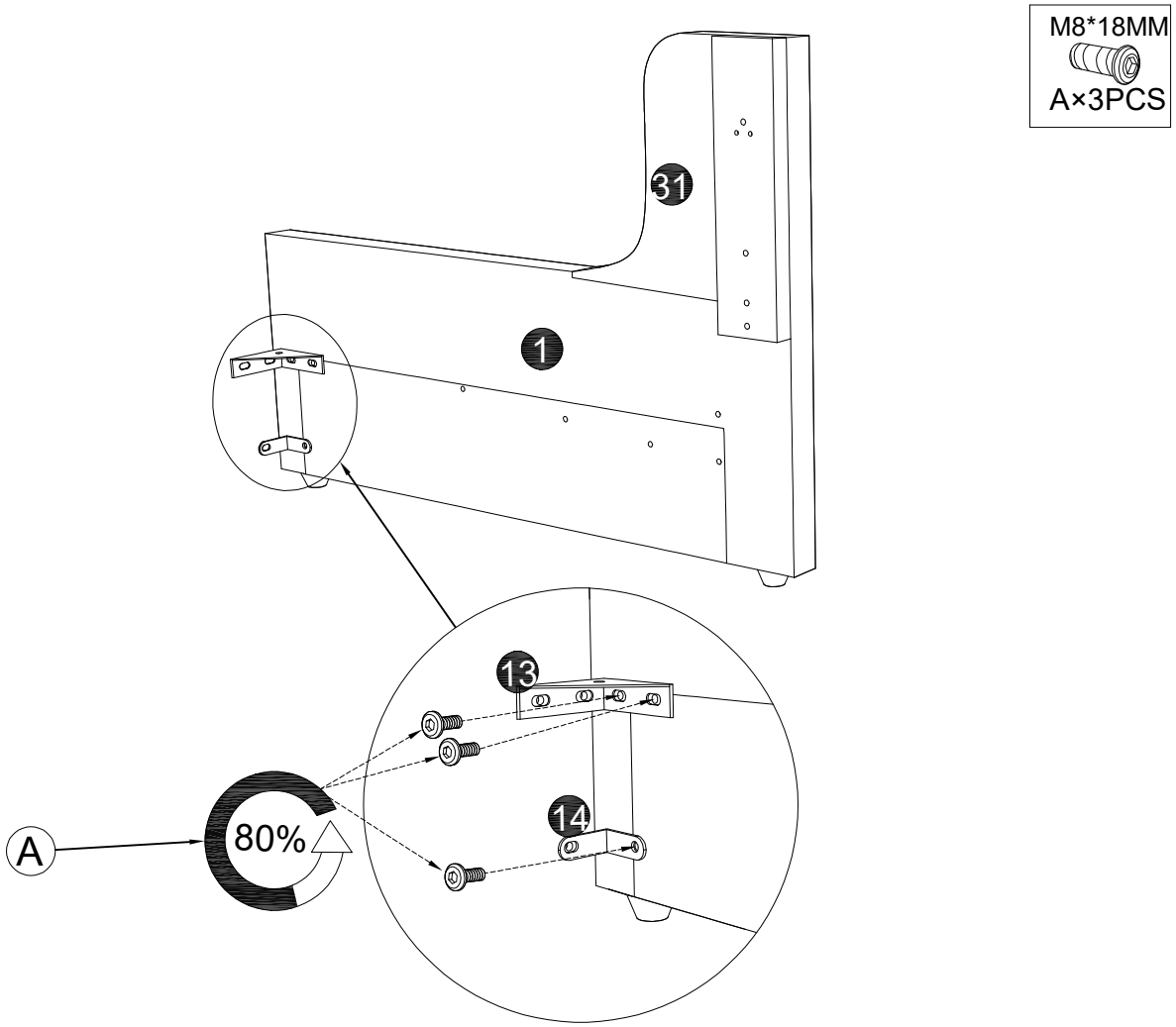

4

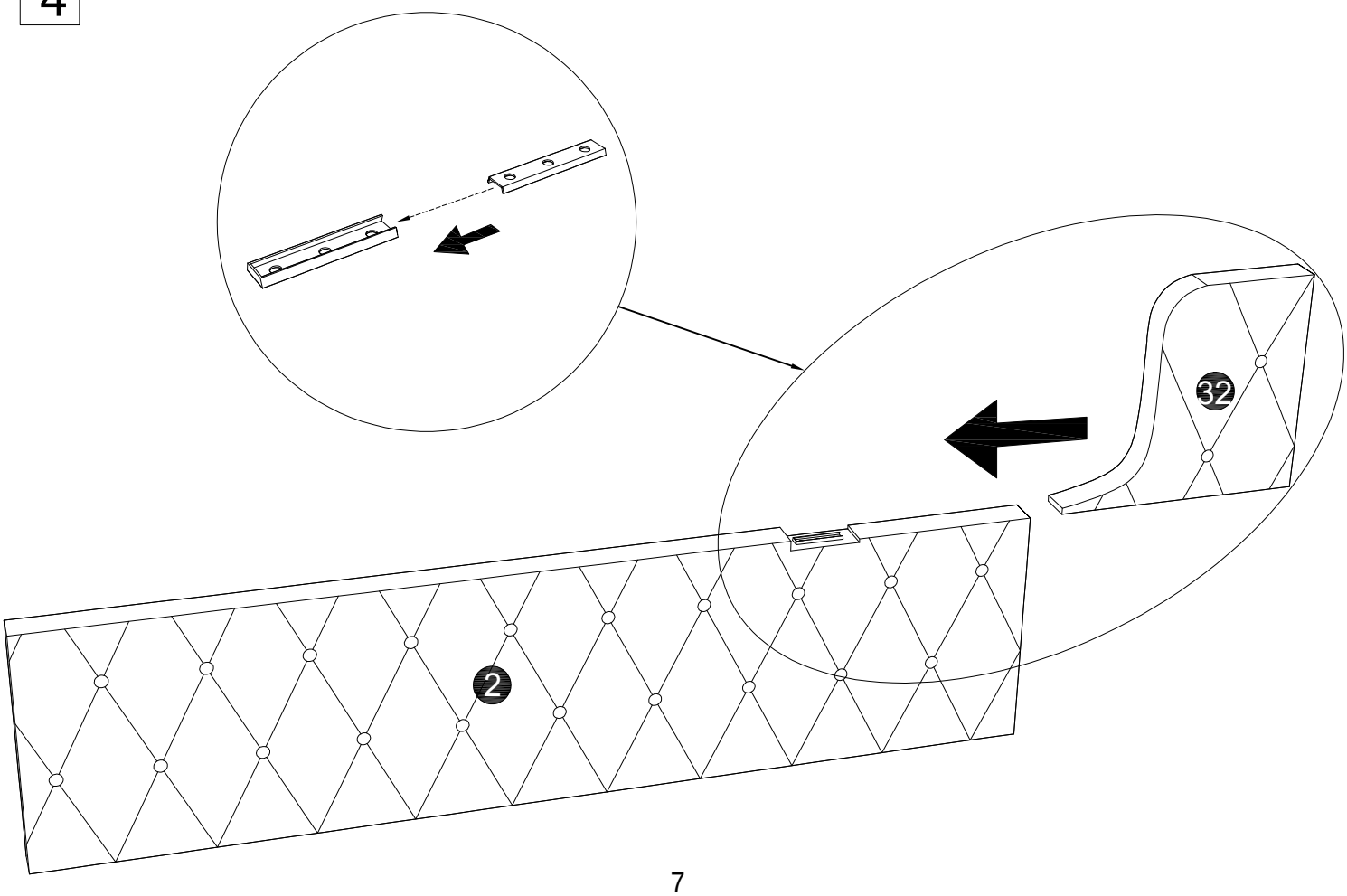

5

M8*18MM	M8*47MM
A×2PCS	E×2PCS

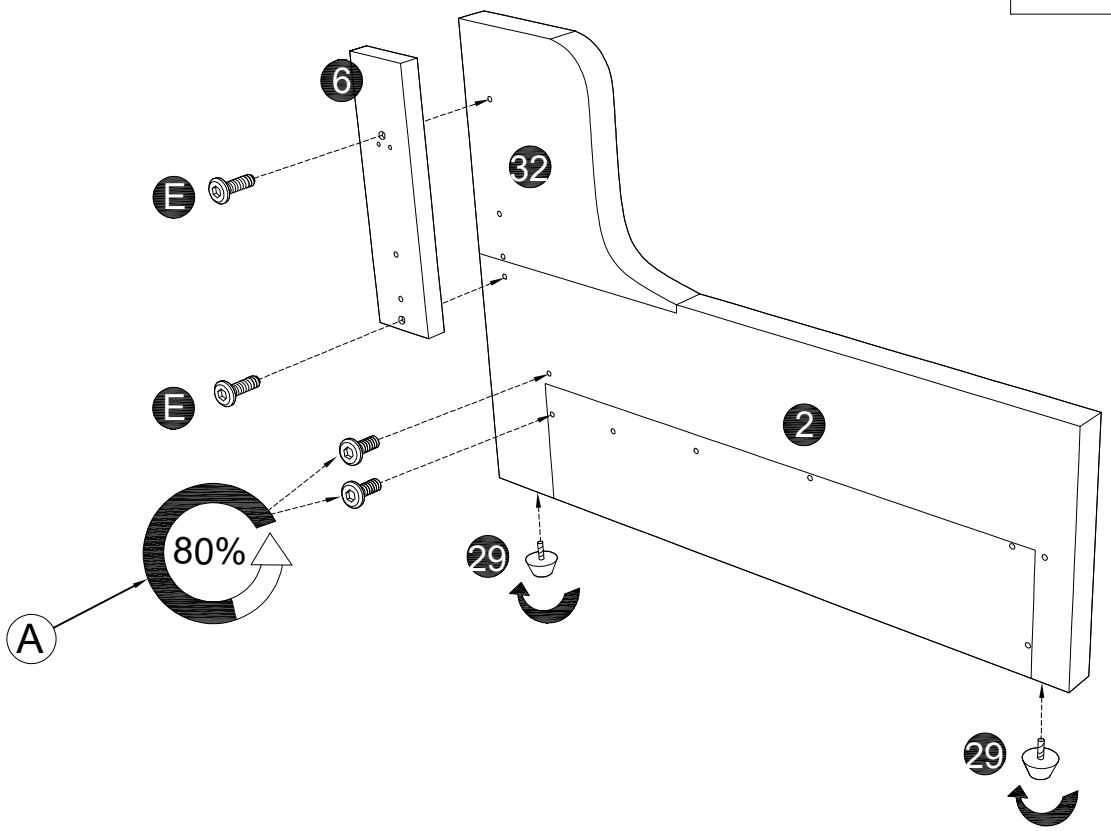

6

M8*18MM
A×3PCS

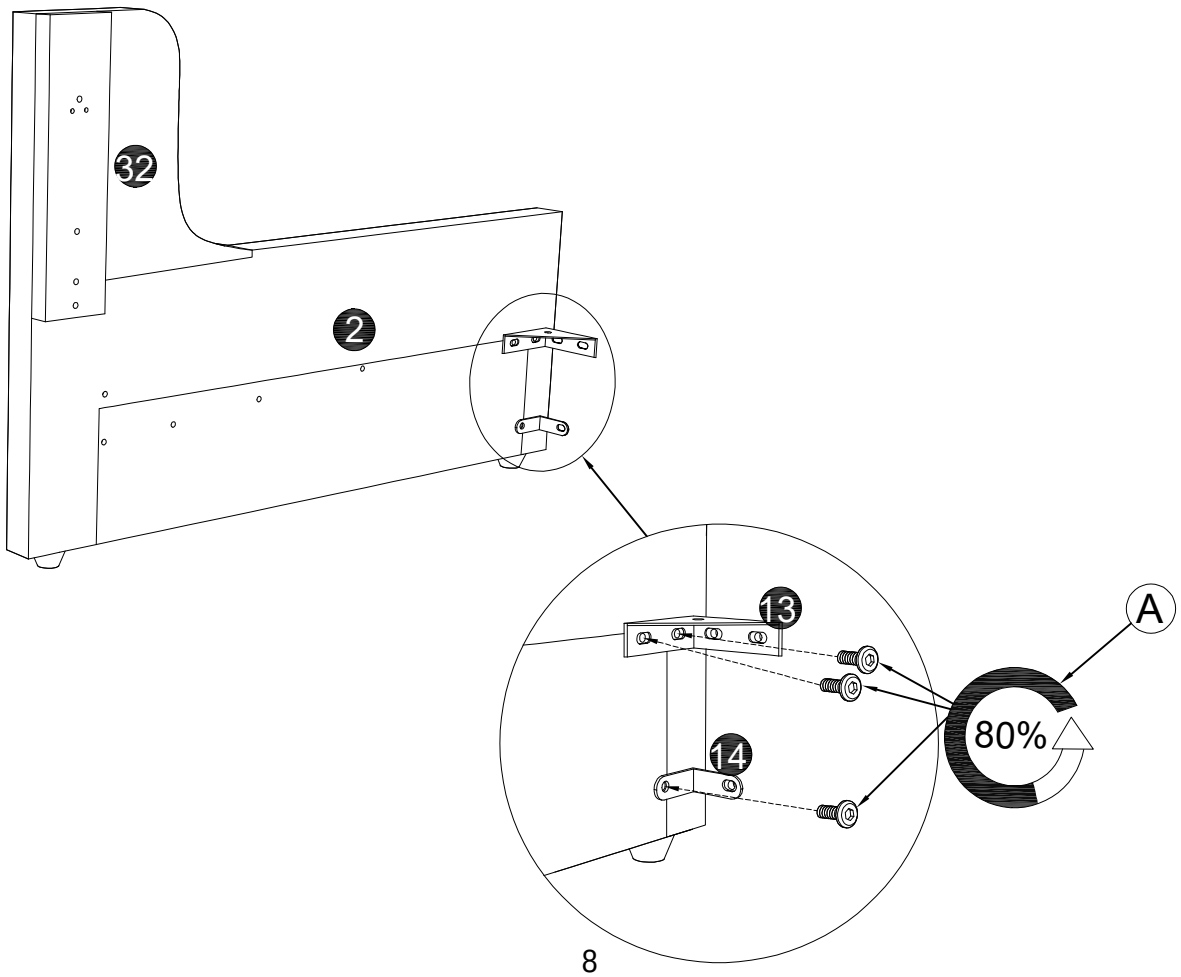

7

M8*18MM	M8*40MM
A×4PCS	D×2PCS

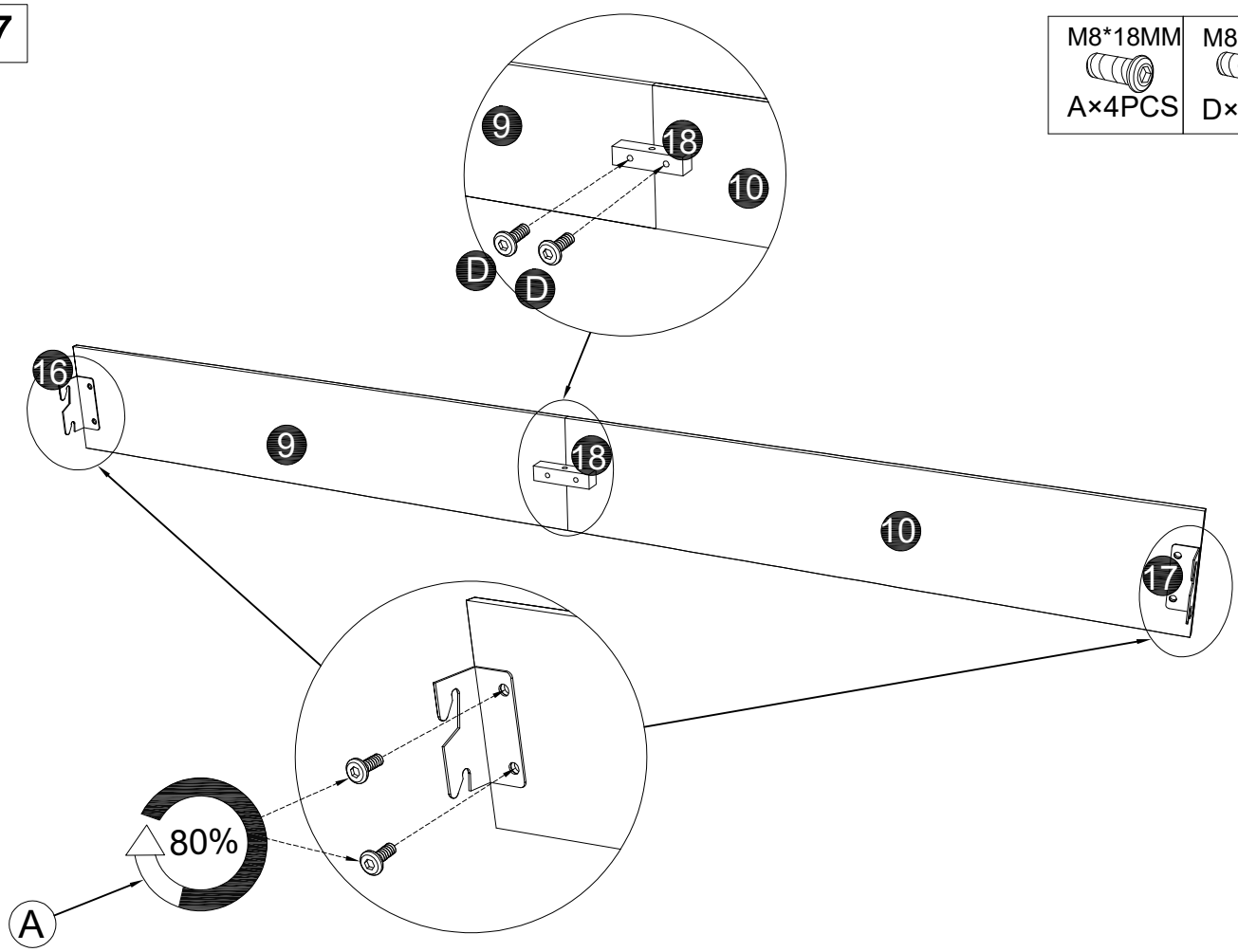

8

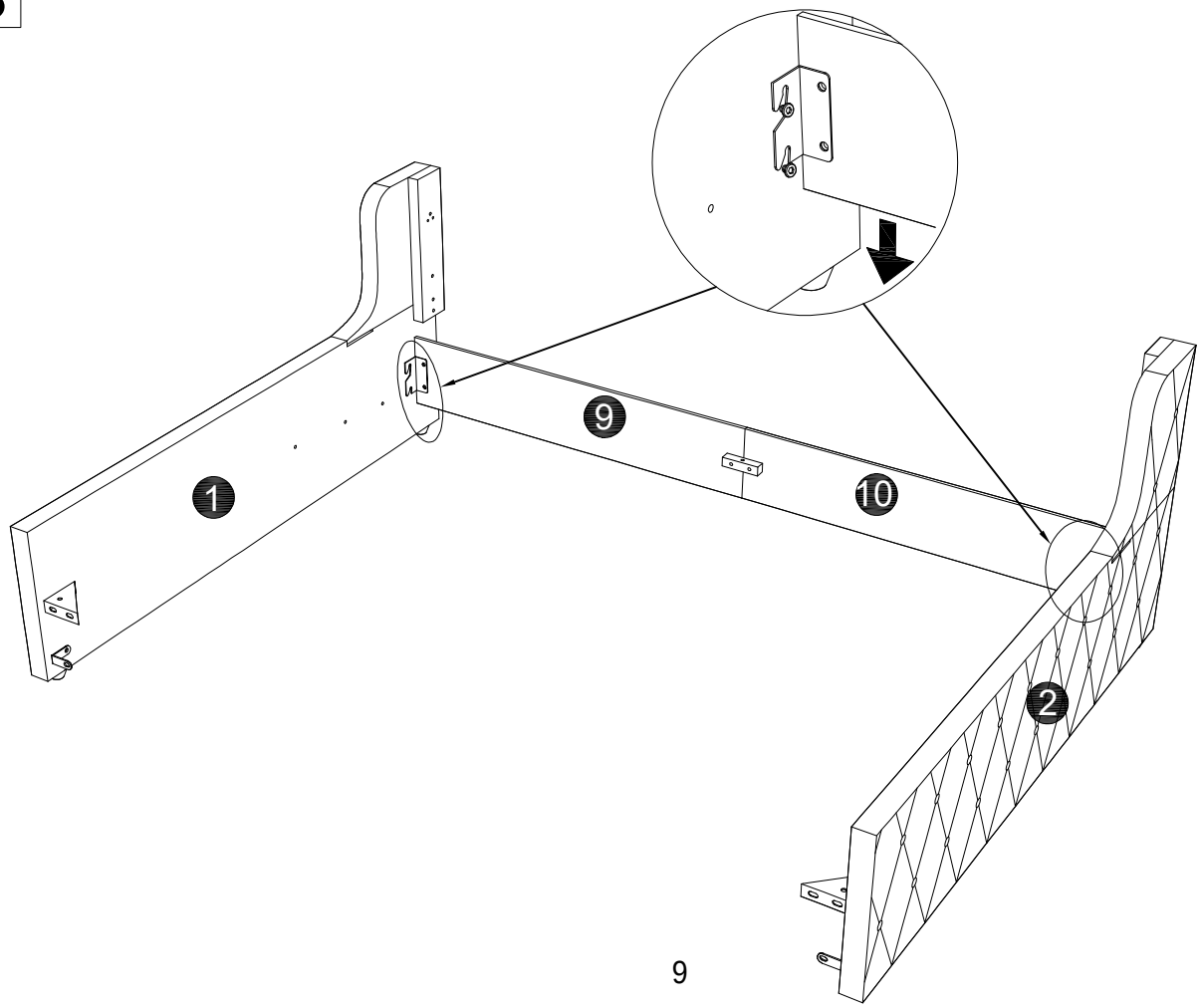

9

M8*30MM	M8*35MM	M8*75MM
B×2PCS	C×4PCS	G×4PCS

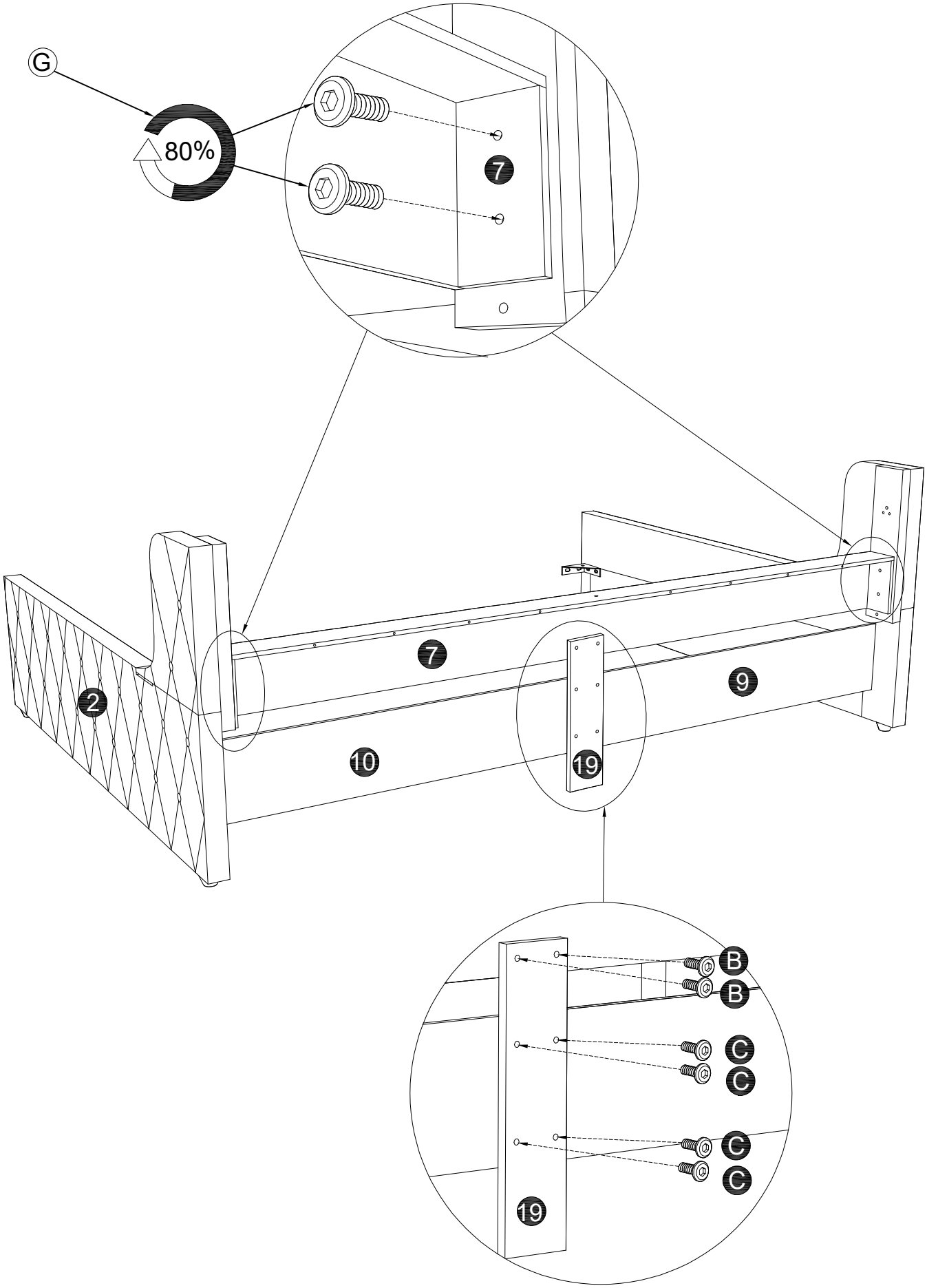

10

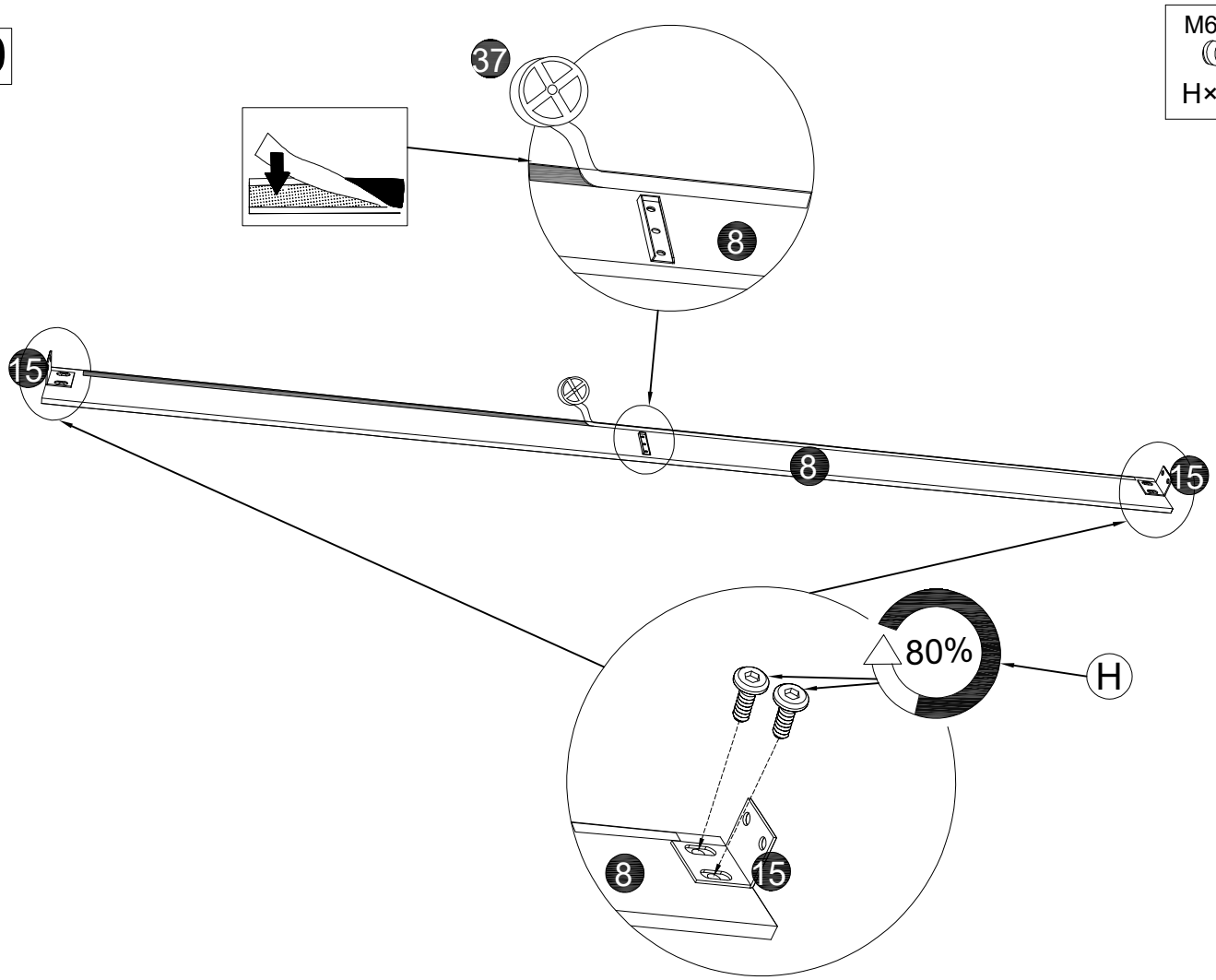

11

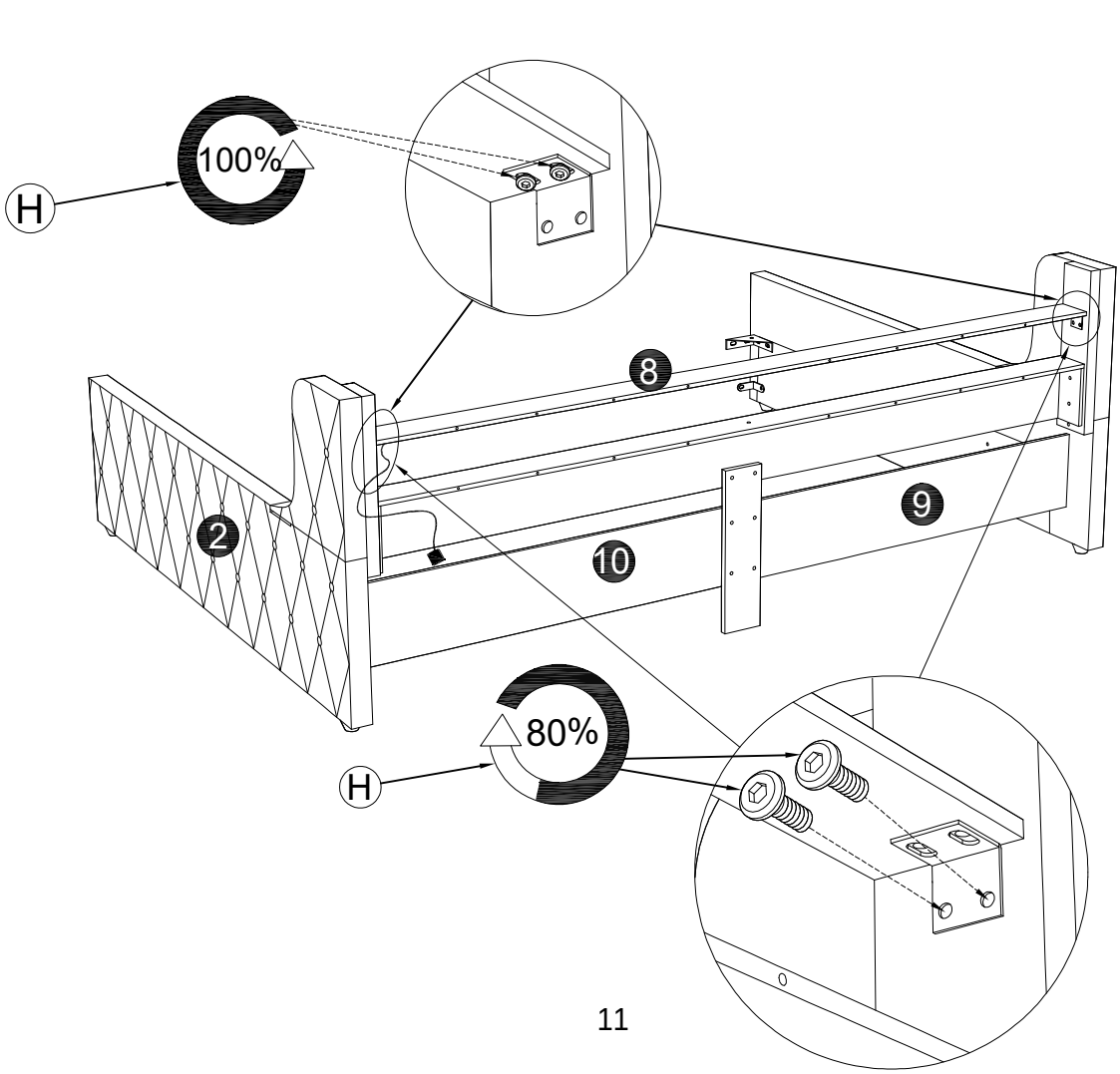

12

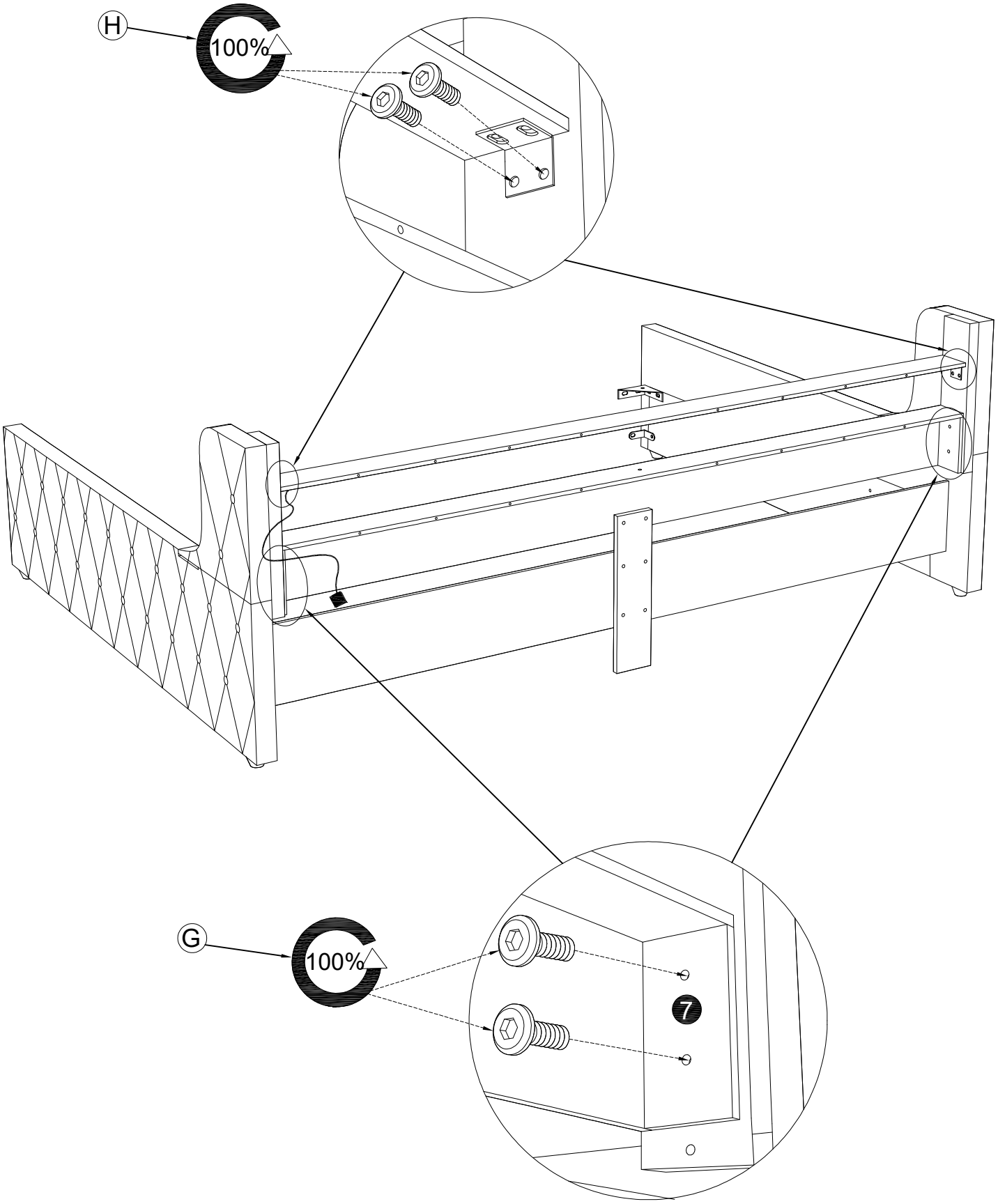

13

M6*30MM
J×1PCS

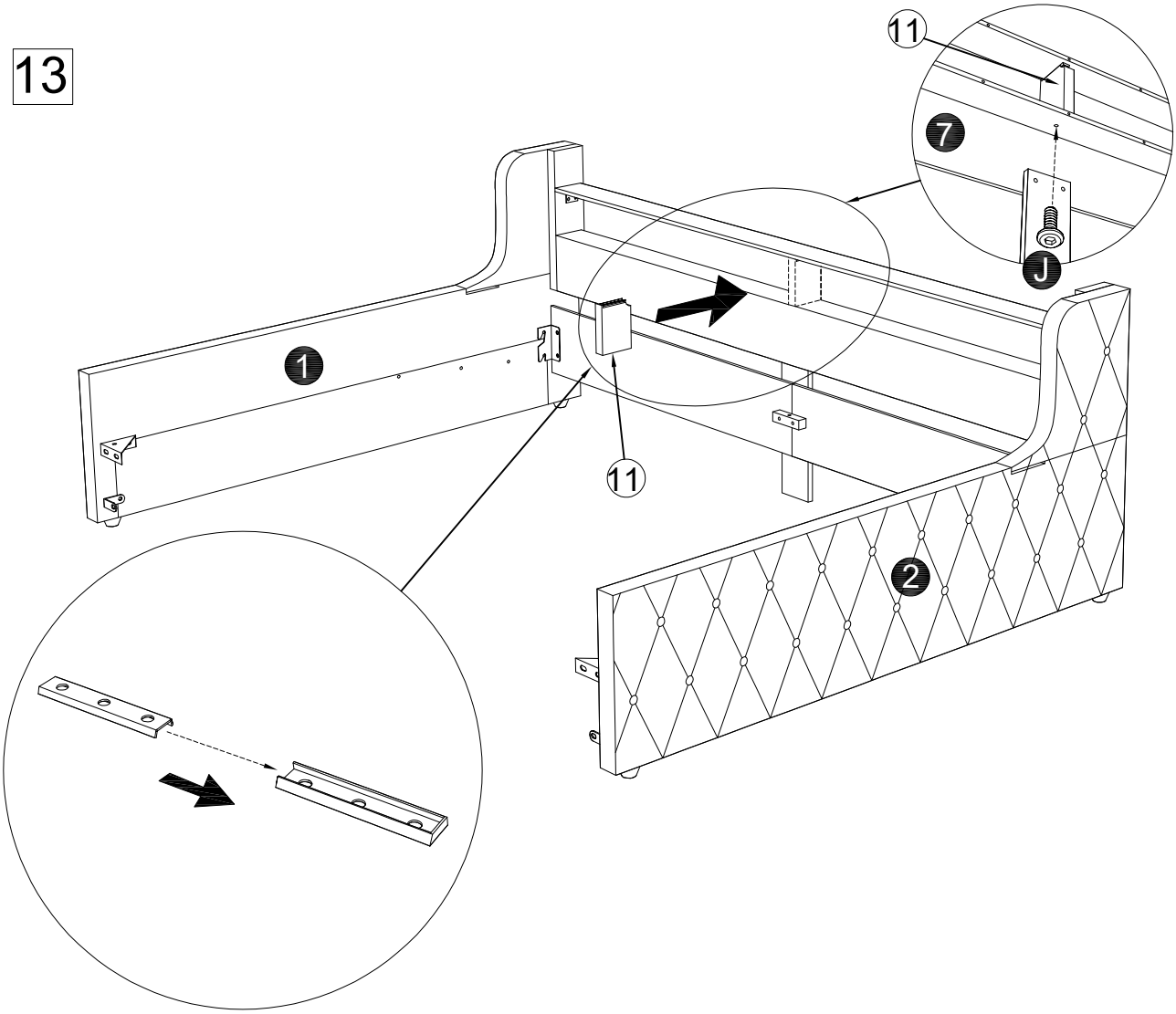

14

φ3*25MM
L×16PCS

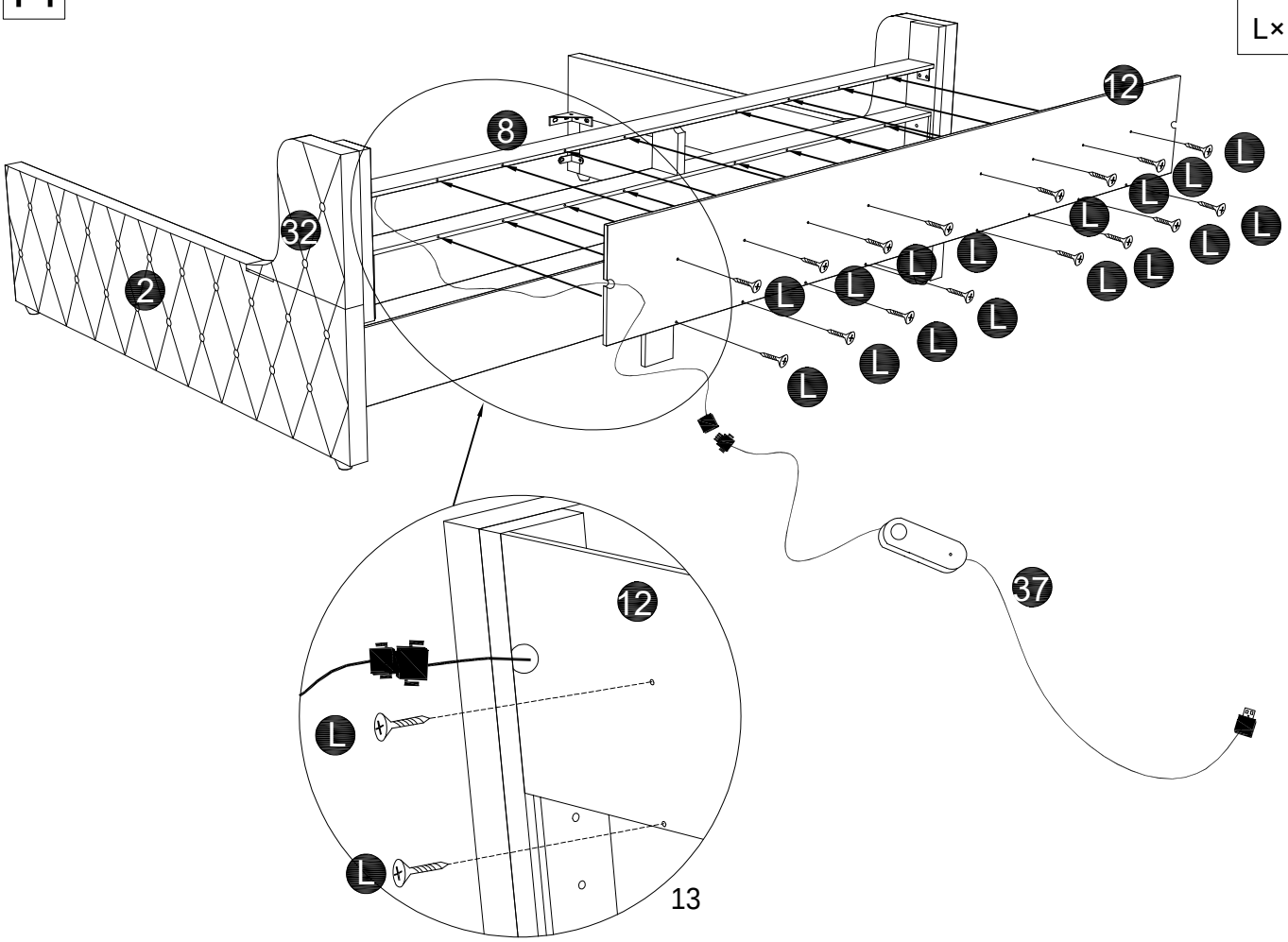

15

M8*35MM	M8*65MM
C×2PCS	F×2PCS

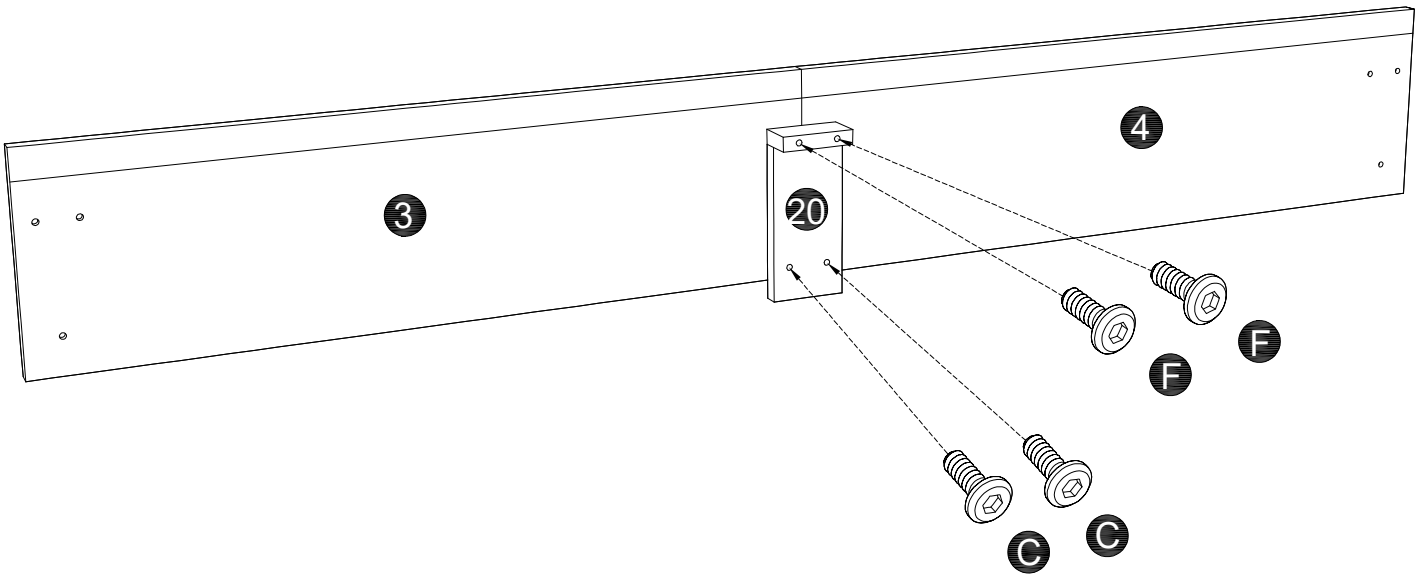

16

M8*18MM
A×6PCS

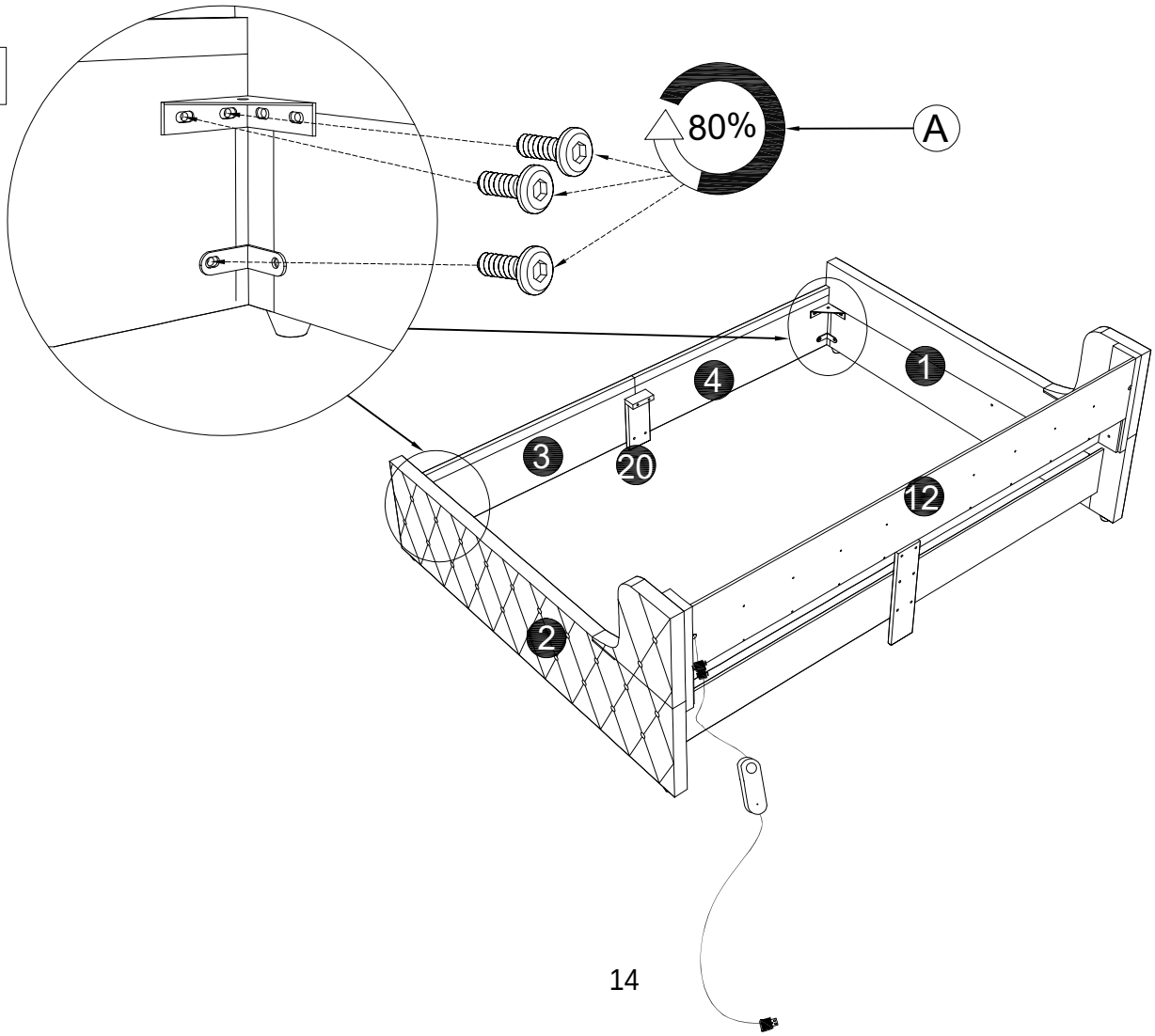

17

M8*18MM	M8*47MM
A×6PCS	E×2PCS

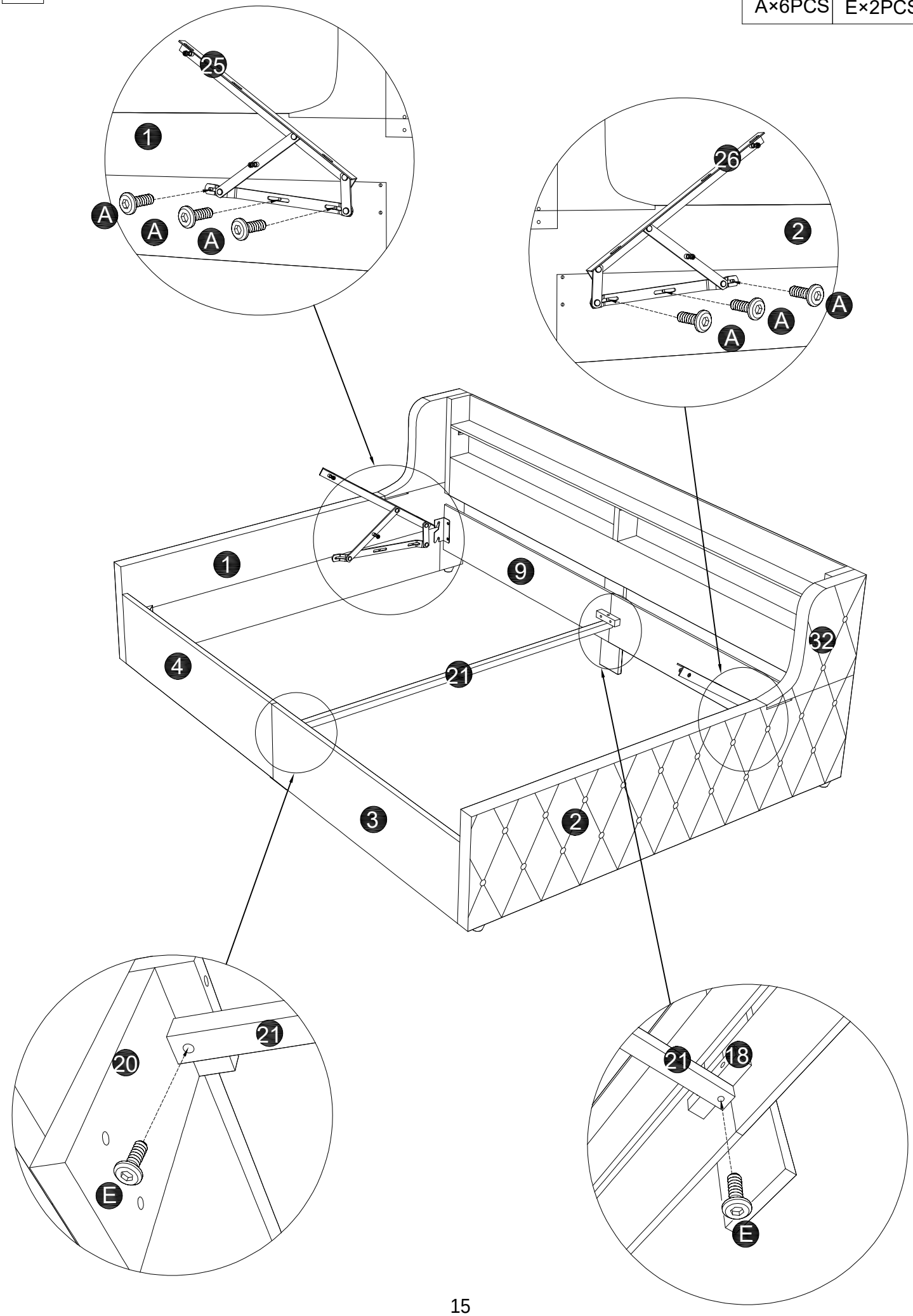

18

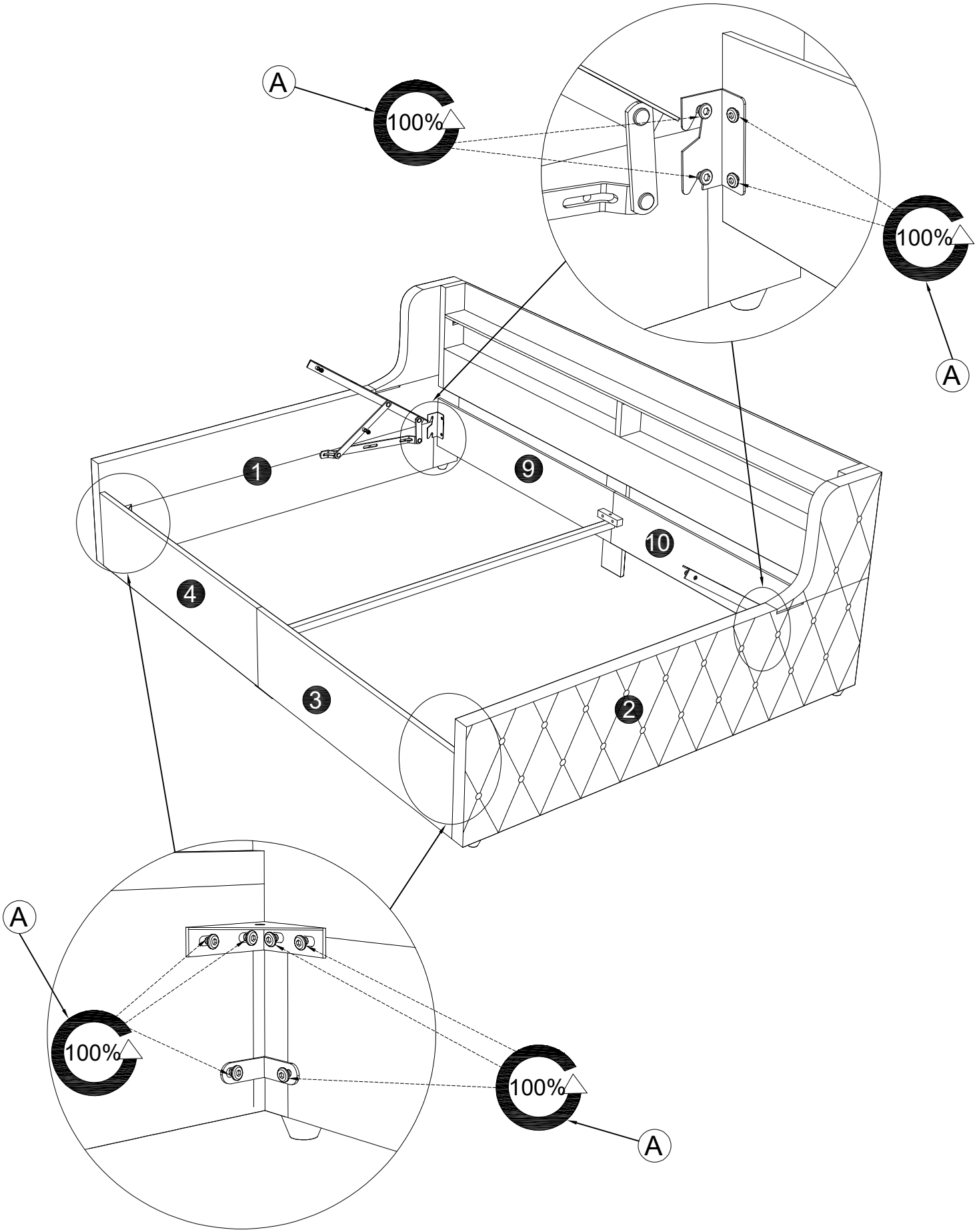

19

M6*16MM
H×8PCS

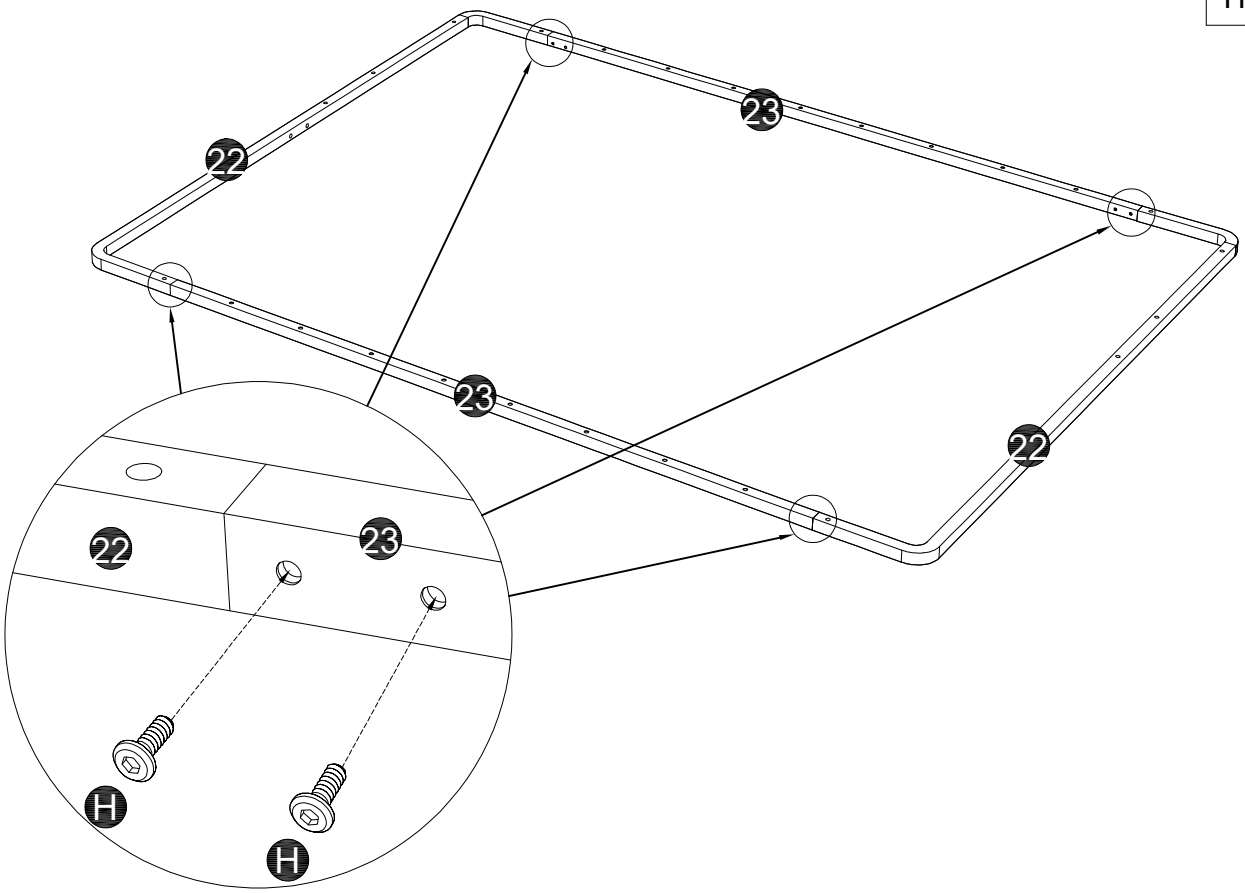

20

M8*18MM	M8*32MM
A×4PCS	K×4PCS

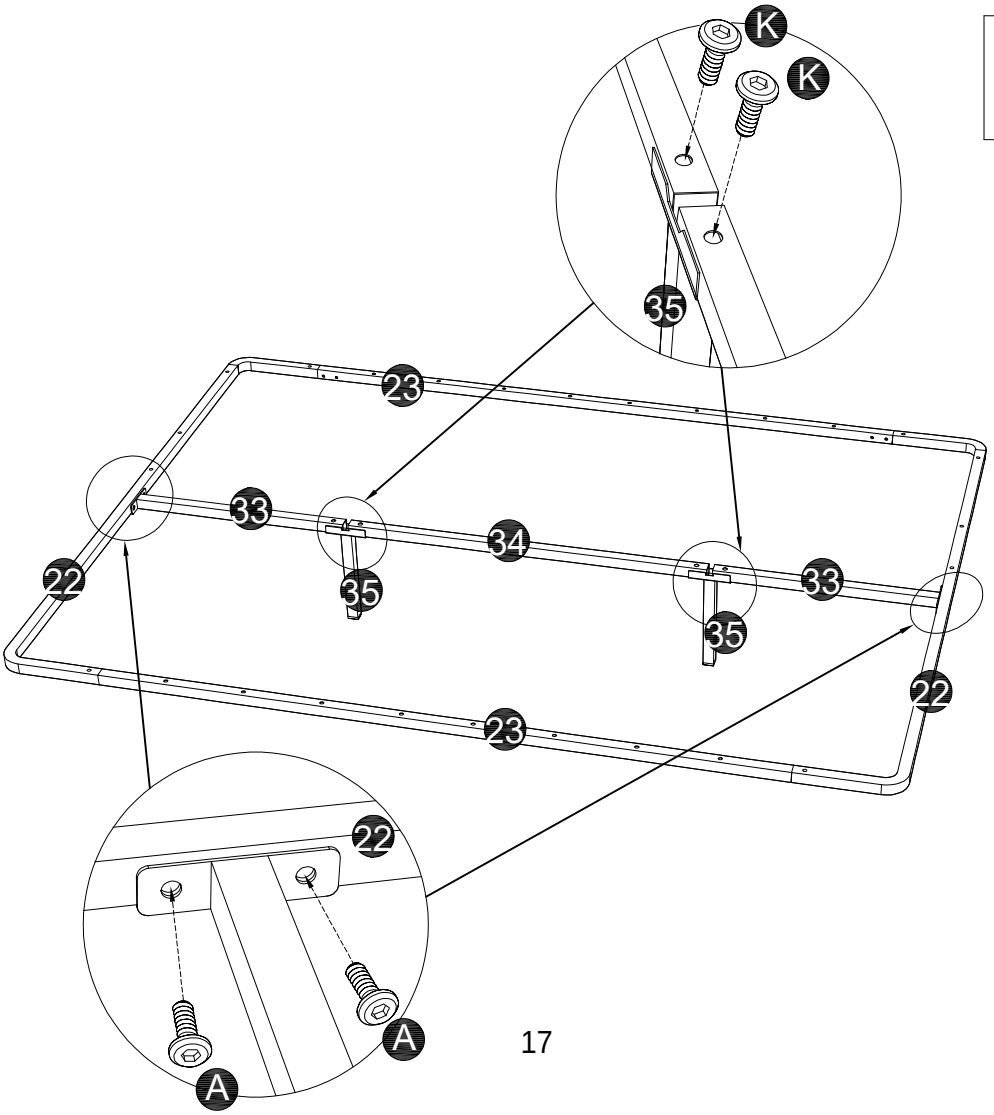

21

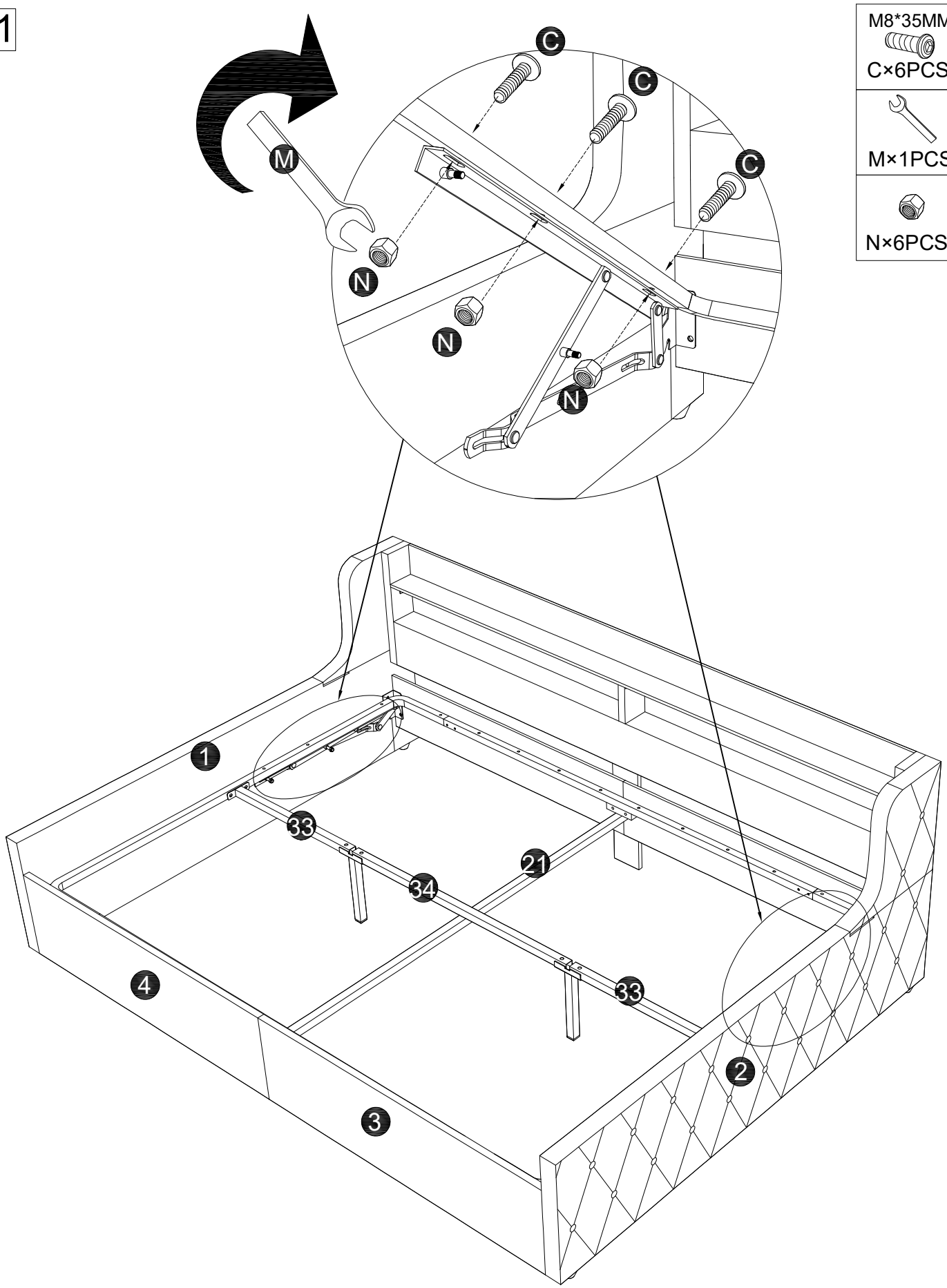

22

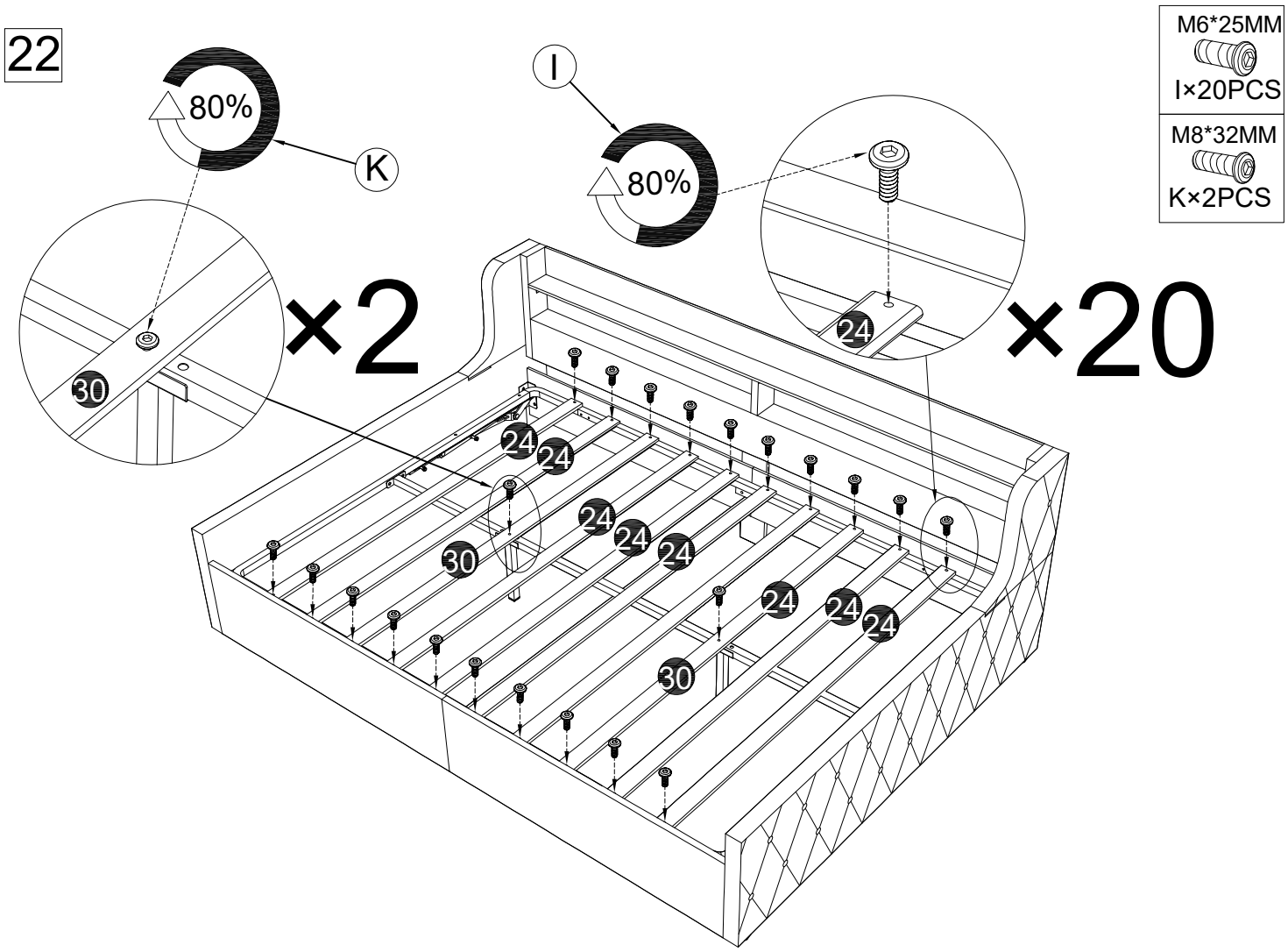
M6*25MM
I×20PCS
M8*32MM
K×2PCS
80%
K
I
80%
×2
×20
30
24
24
24
24
24
30
24
24
24
30

23

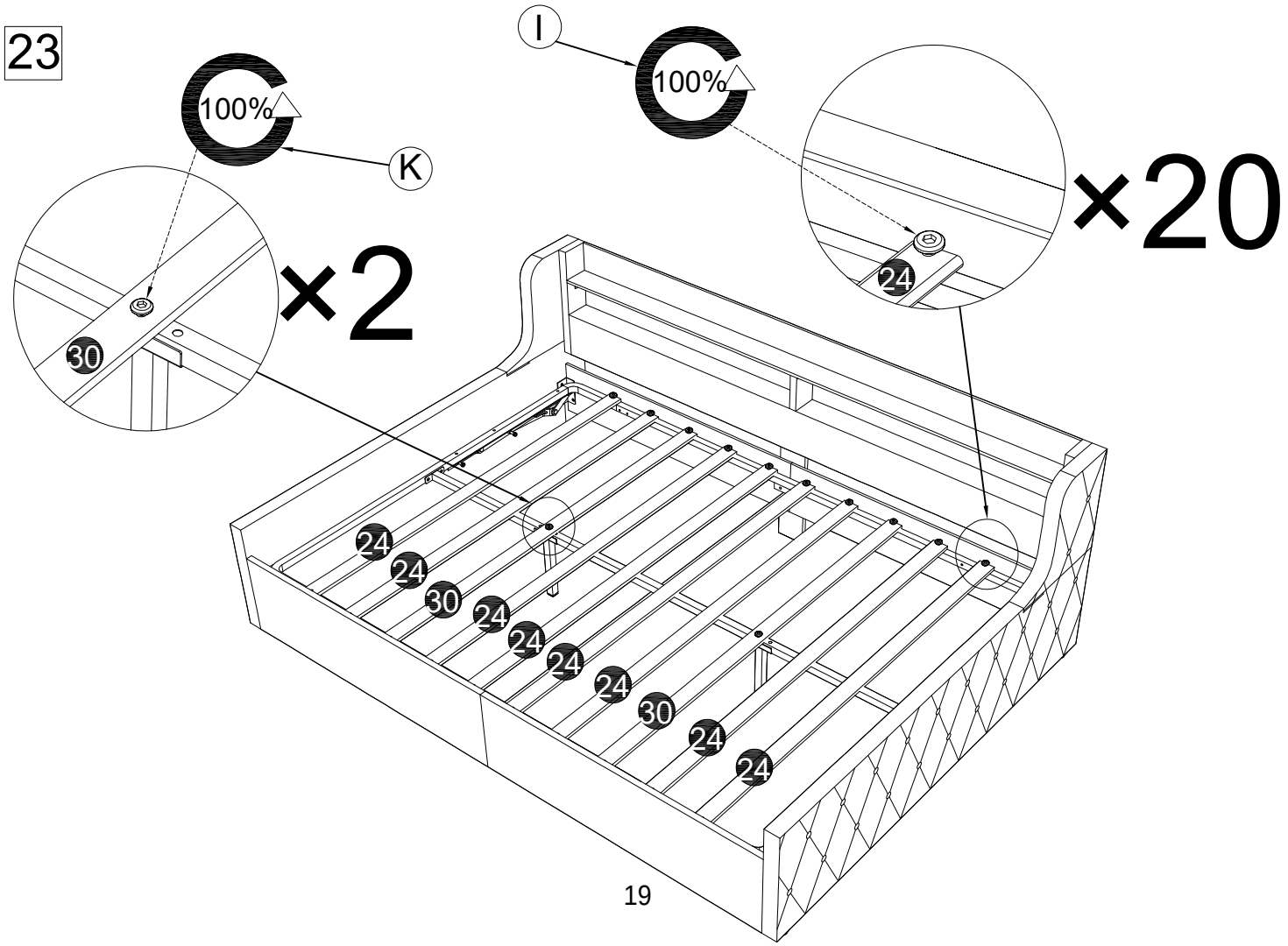
I
100%
100%
K
×2
×20
30
24
24
24
30
24
24
24
24
30
24
24

24

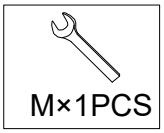

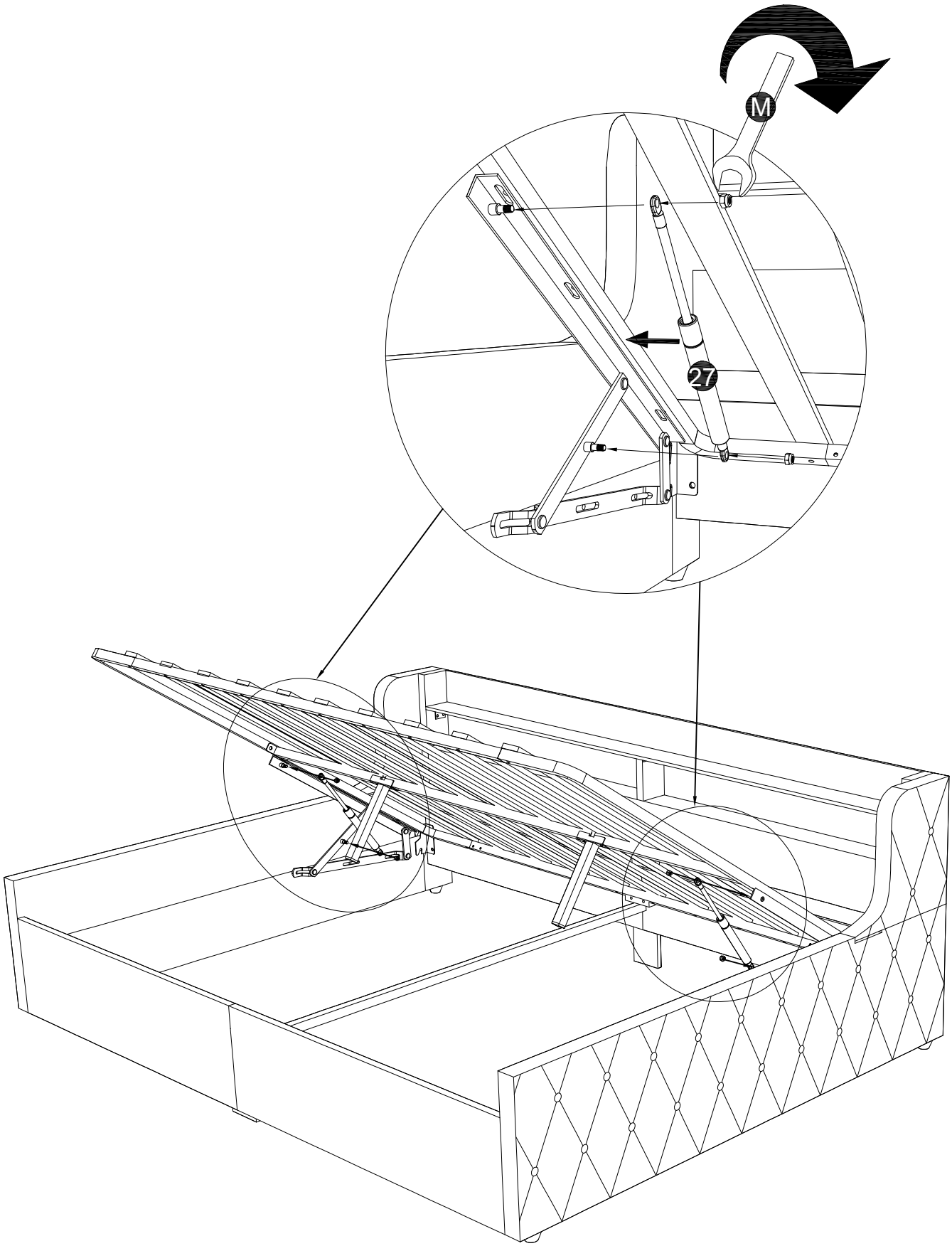

25

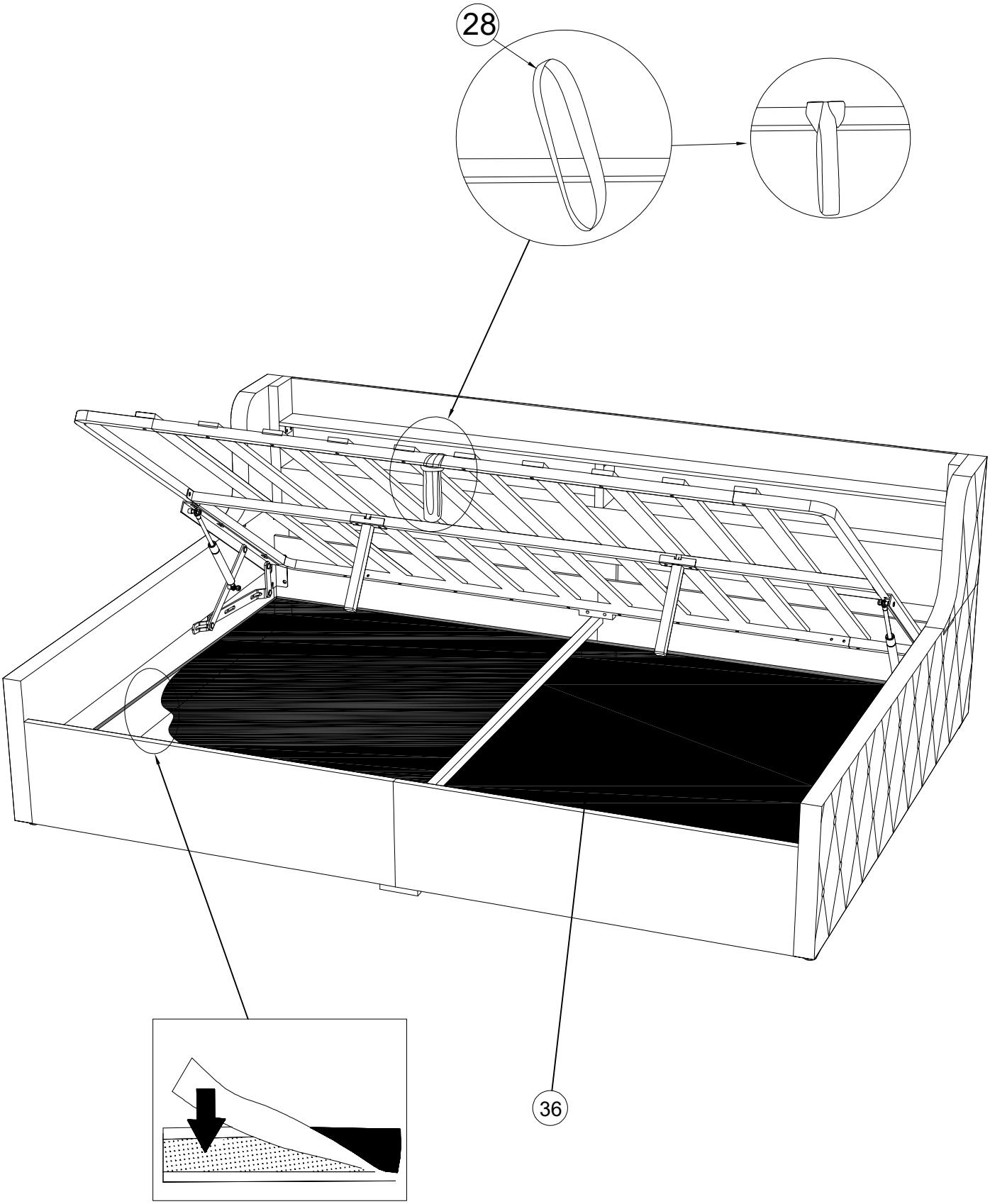

26

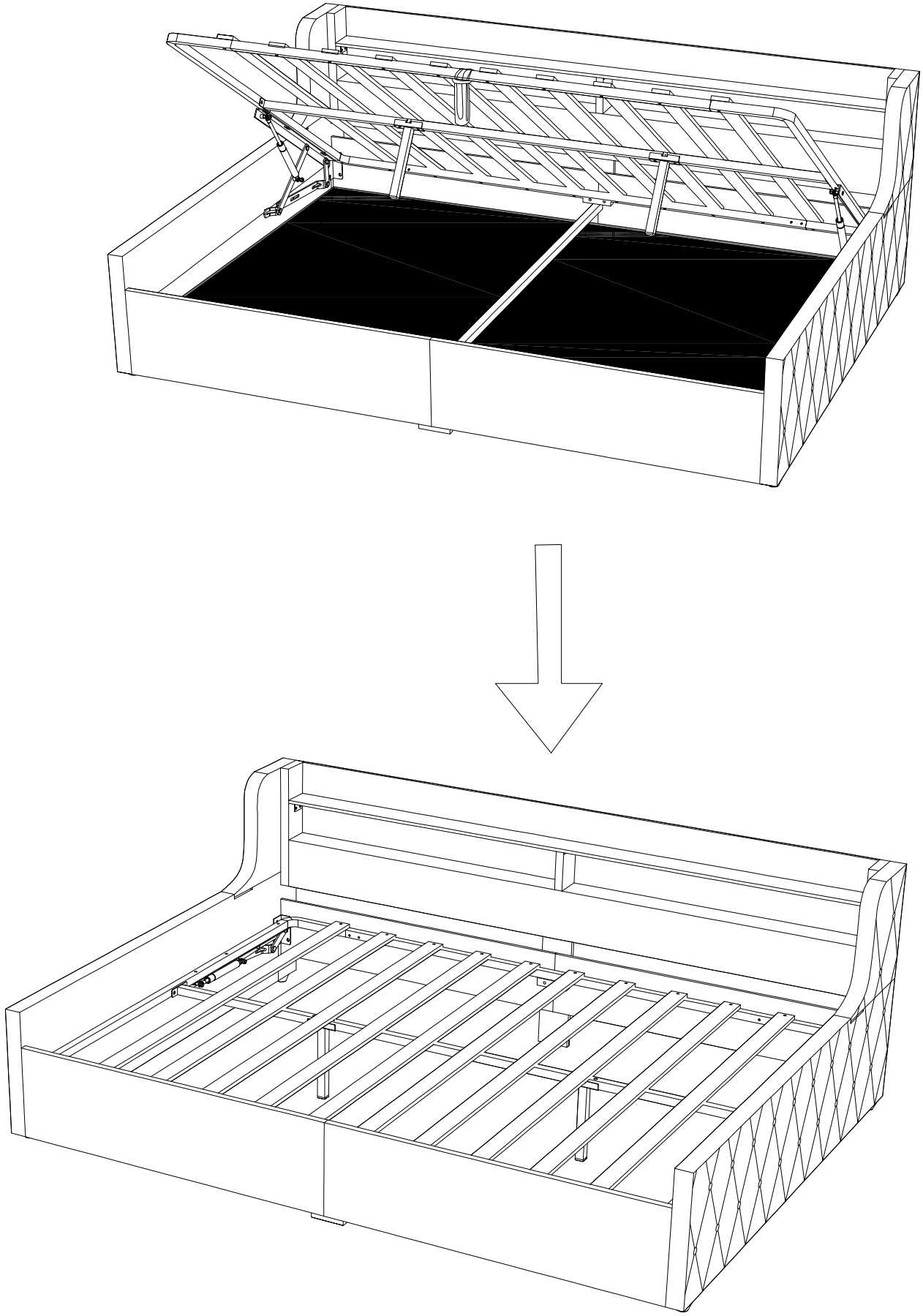

LotusLantern APP Manual

1. Software Overview

1.1 Overview

LotusLantern is a mobile APP to control LED strip by both Apple and Android phones.

The traditional control ways like infrared, 433MHz, 2.4GHz and others old wired ways will be replaced by mobile phone control way with convenient, powerful and scalable features.

Through this mobile APP，you can not only control the color, brightness and color temperature of the LED strips but also set up all kinds of fancy flash mode；Also this APP can change the light of the LED strip according to the rhythm of the music. This APP can set and control several LED strips through Bluetooth and the operation is very simple, easy to learn and easy to use.

1.2 Features

- Adjust color LED strips with 60,000 colors to change color and brightness and adjust monochrome LED stips to change brightness and color temperature
- Play music or turn on a sound playback device, you can let the light change the color and brightness with the rhythm of music, the music rhythm beautiful
- Inside multiple setting mode for color change and control LED strips without mobile
- Long distance control with omni-directional antenna, and many-to-many group control mode
- Once the connection is successful, connect automatically next time

1.3 Performance

LotusLantern APP is easy for use as well as great compatible for all kinds of smart phones; After the actual test of hundreds of mobile phones verification, the compatibility is above 95% of mobile phones in the market. APP is small and convenient, it consumes less system resources, so the requirements of the mobile configuration are low. Control delay is small, the operation feel good, light control is smooth with people's visual sense.

2. Operating Environment

This APP program requires phones of system above Andriod 4.3 and iOS 8.0. Mobile phone configuration is not limited.

3. Instuctions

Note: Android version and iOS version download and use the same method, here in the Android version as an example.

3.1 APP Download

- Scan the QR code

iOS and Android systems can download the "LotusLantern" APP by scanning the QR code. Open the browser or other tools with "Scan QR code" function, scan the "LotusLantern" QR code as below:

3.2 App Operation

(1) Click on the LotusLantern APP icon, enter the APP page:

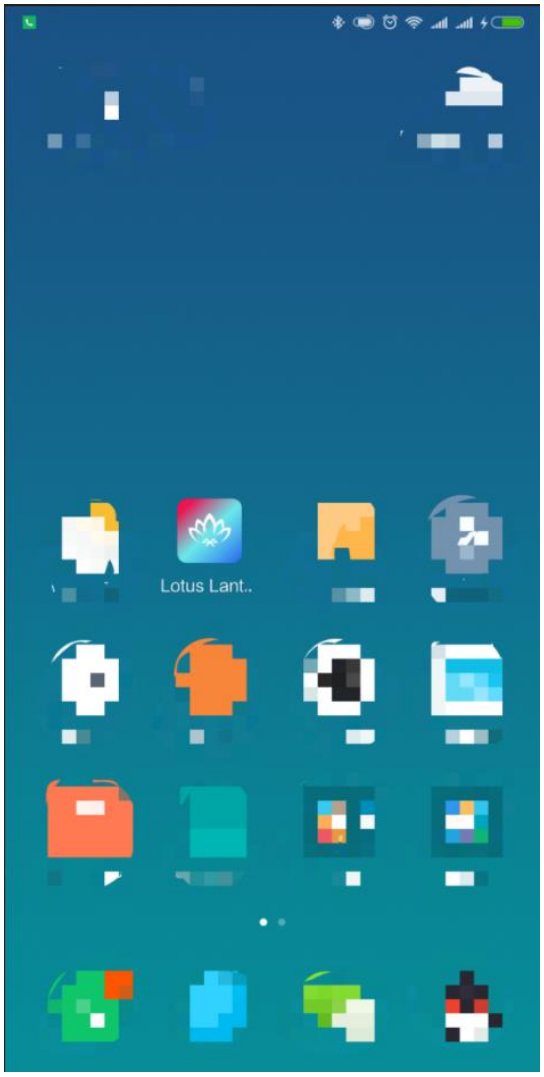

(2) After entering the APP interface, if Bluetooth is not enabled, "an application wants to enable the Bluetooth function of this device." Click [Allow]

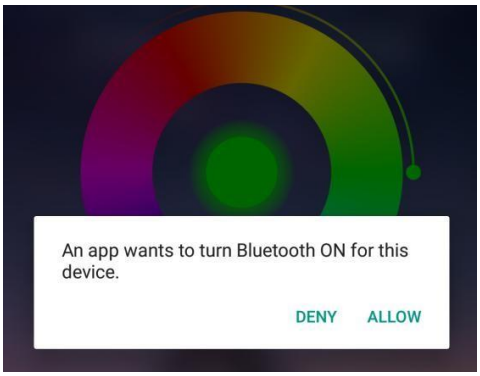

(3) switch to color and brightness interface:

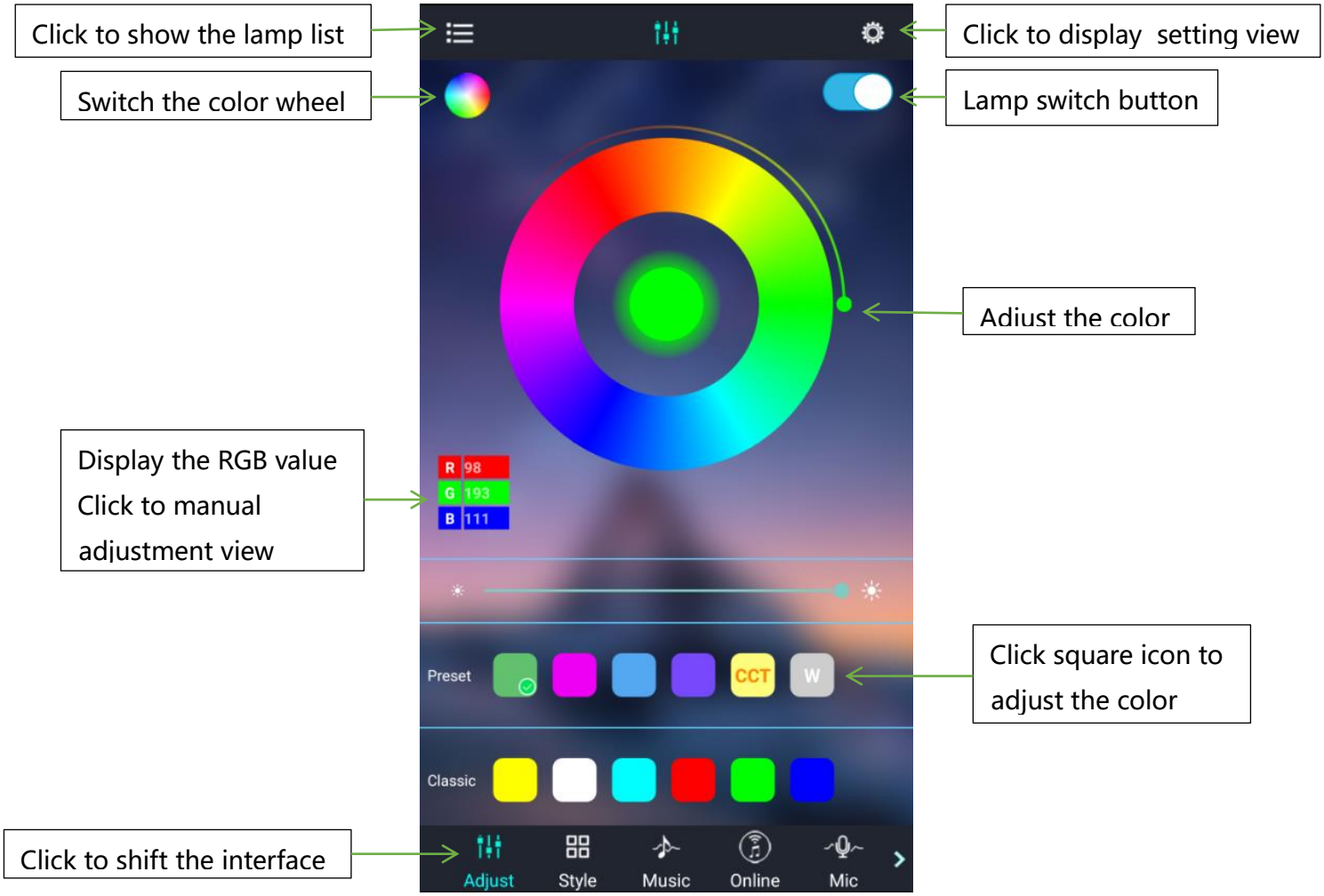

(4) click to show the lamp list, view lamp list:

Bluetooth auto connect after search for devices

Lamp list

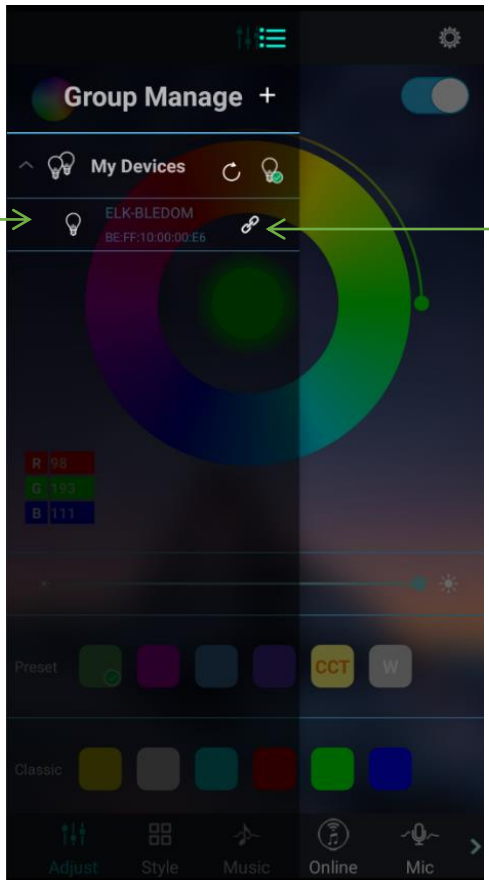

Status of device connection

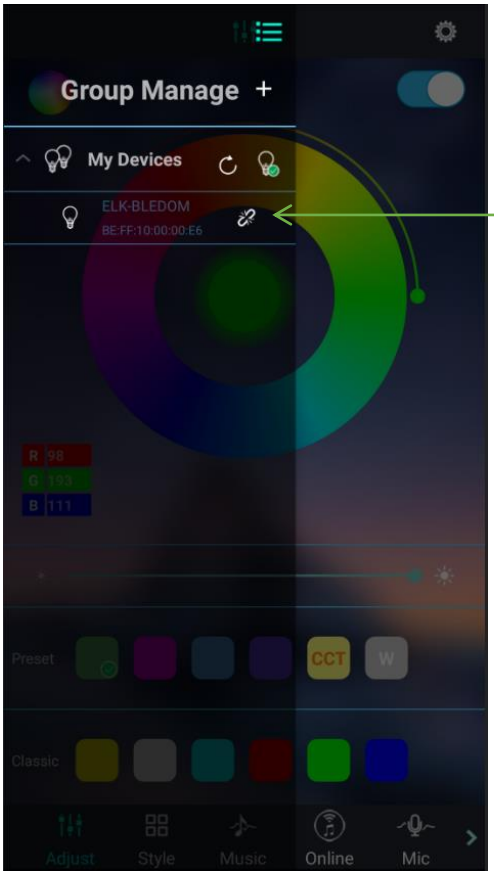

Status of device connection

(5) Click to RGB manual adjustment view:

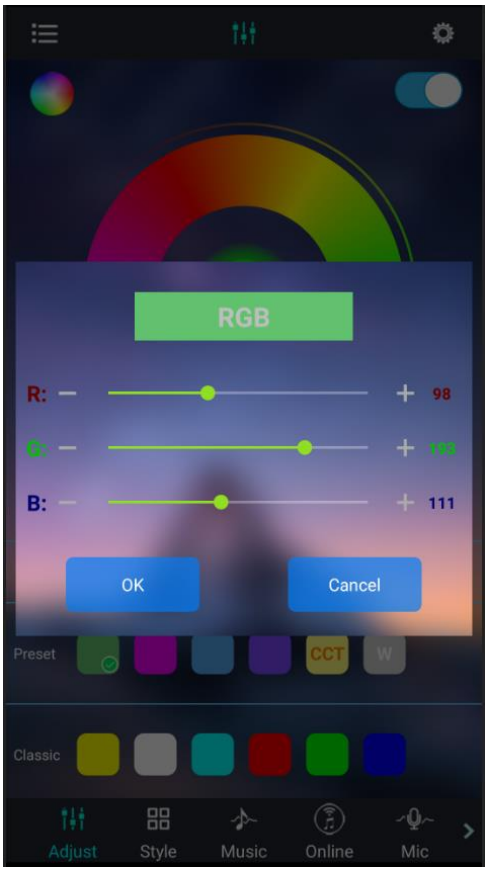

(6) switch to the mode interface:

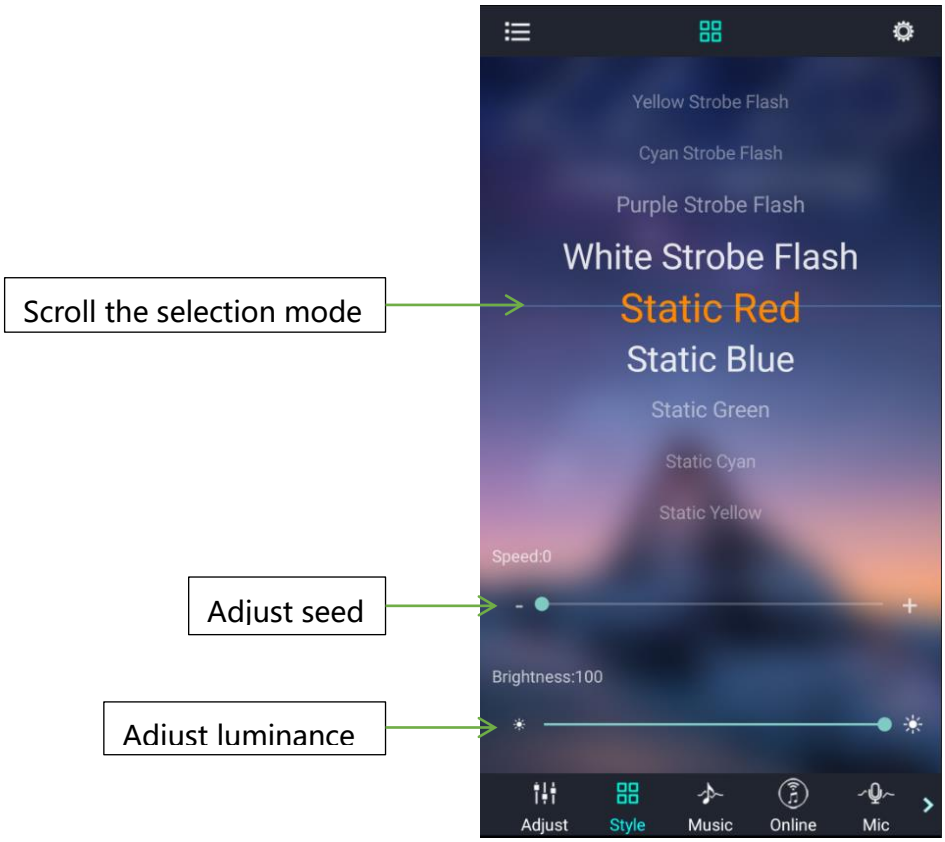

(7) switch to the music rhythm interface:

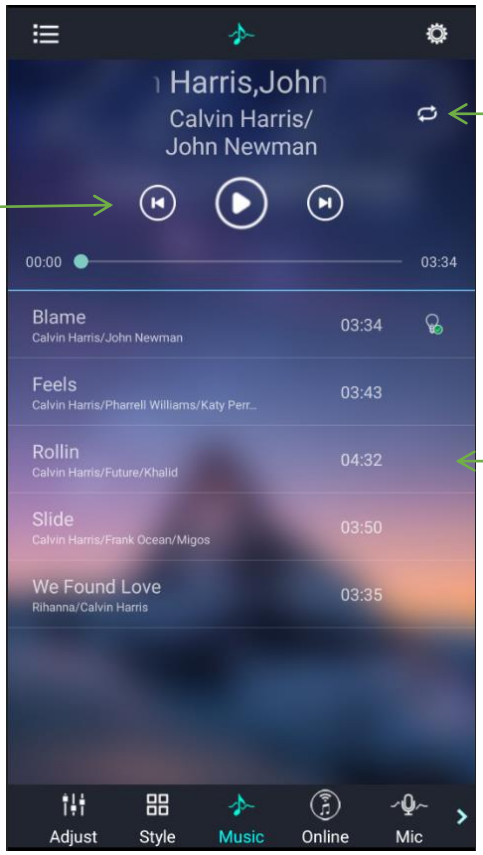

Recycle mode

Previous song, Pause/Play, Next song

Music List

(8) Switch to the online music interface:

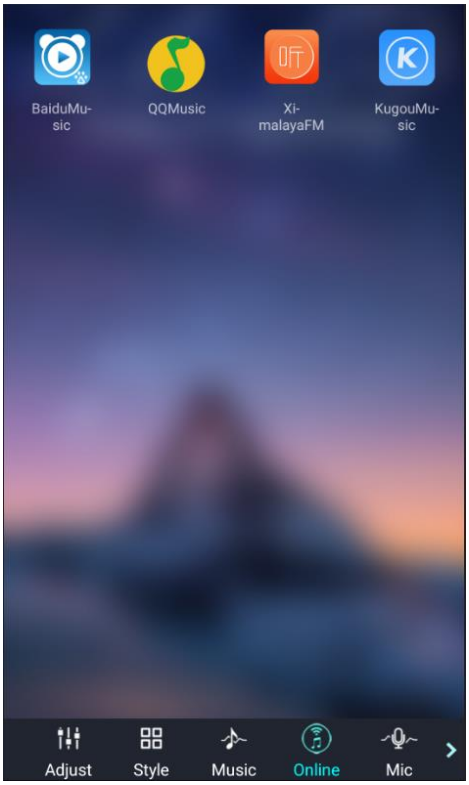

(9) Switch to the microphone rhythm interface:

Music rhythm through cell phone microphone

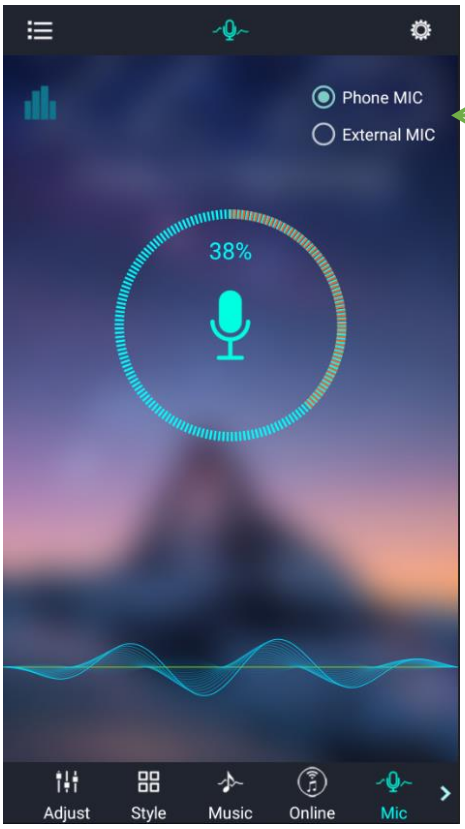

Switch phone microphone and external microphone

Music rhythm through the microphone on the product

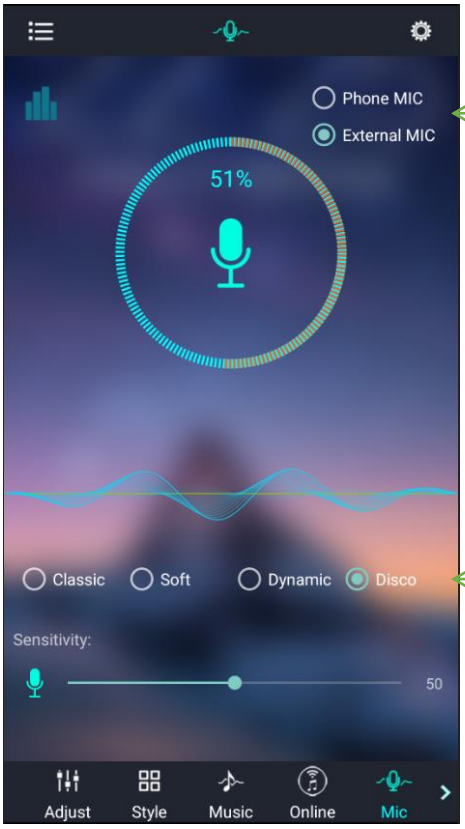

Switch phone microphone and external microphone

4-style rhythm

Change the sensitivity of MIC to match the sound

(10) Switch to the schedule interface:

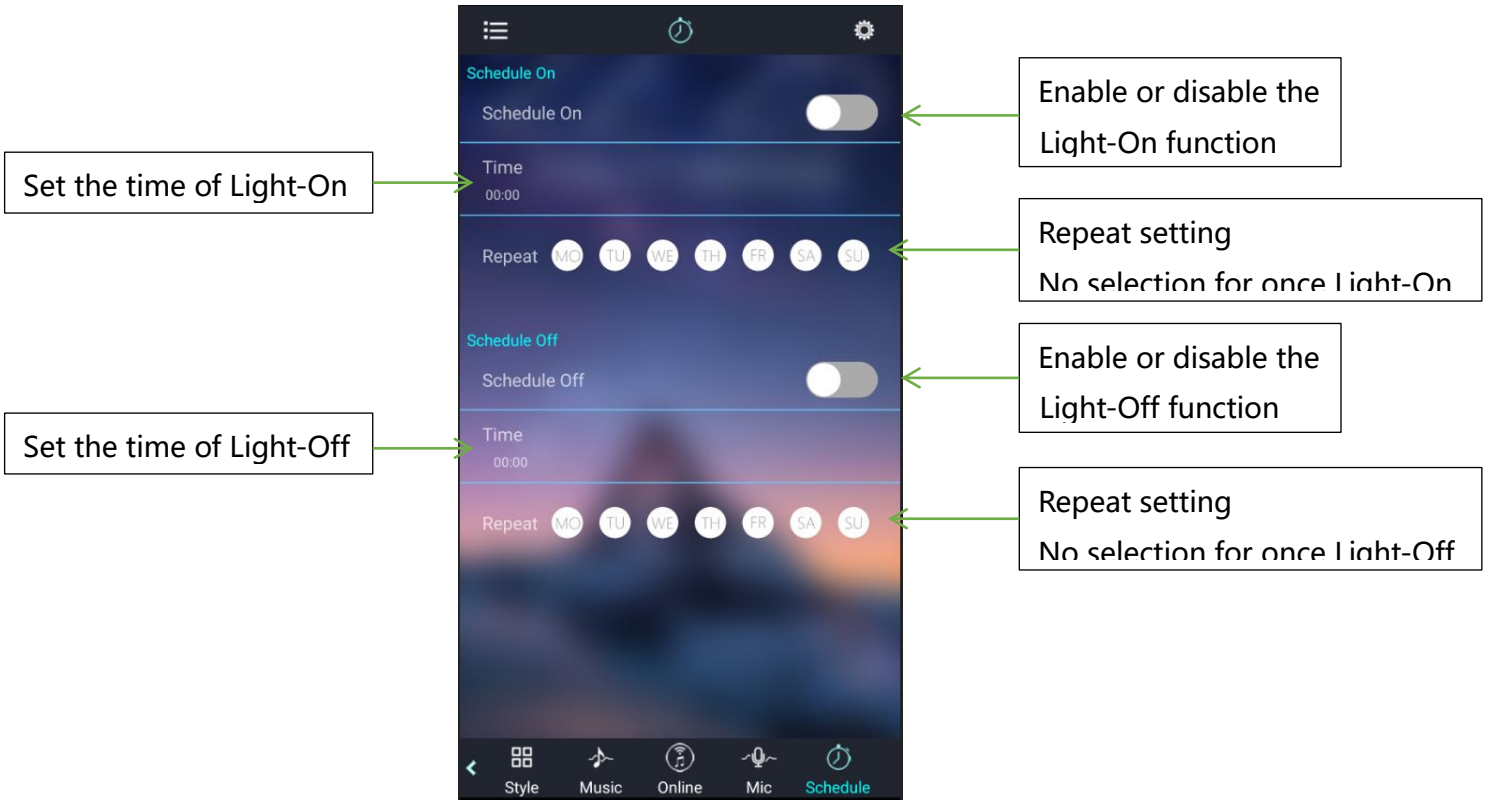

(11) Switch to the modify pin sequence interface:

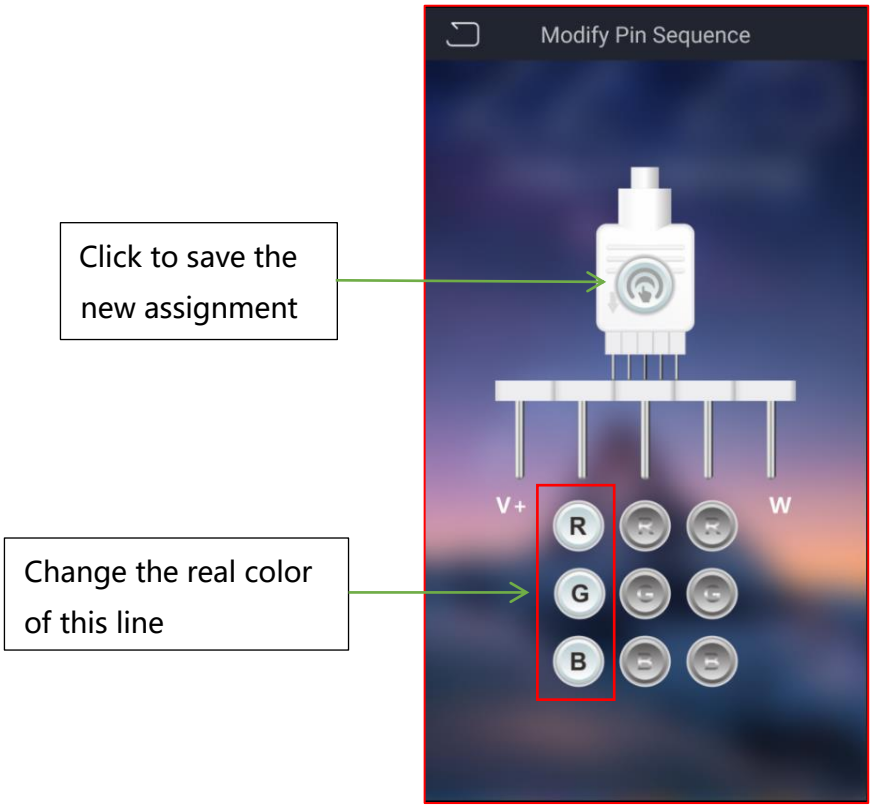

This certificate is responsible for testing sample only.
Please refer to this corresponding test report to get testing process and data.

CERTIFICATE

ATTESTATION
Certificate of Compliance

Technical file of the company mentioned below has been inspected and audit has been completed successfully

The RED Directive 2014/53/EU has been taken as references for these processes.

Certificate's Holder	:	Shenzhen xu xing technology co., LTD
Address	:	Floor 3, building C, Huaze hi tech Industrial Park, Shiyan street, Bao'an District, Shenzhen
Manufacturer	:	Shenzhen xu xing technology co., LTD
Address	:	Floor 3, building C, Huaze hi tech Industrial Park, Shiyan street, Bao'an District, Shenzhen
Product Name	:	XX LED RGB STRIP
Product Model (S)	:	XX5050RGB-60D, 5V-5050RGB-30D, 5V-5050RGB-60D, 12V-5050RGB-60D, 12V-5050RGB-30D, DY05RGB122, DY05RGB140, DY05RGB88
Trade Mark	:	N/A
Related Directive	:	2014/53/EU
Related Standards	:	Article 3.1a) : EN IEC 62368-1:2024 + A11:2024 EN 62479:2010 EN 50663:2017 Article 3.1b) : ETSI EN 301 489-1 V2.2.3 (2019-11) ETSI EN 301 489-3 V2.3.2 (2023-01) EN IEC 61000-3-2:2019 + A1:2021 + A2:2024 EN 61000-3-3:2013 + A1:2019 + A2:2021 Article 3.2) : ETSI EN 300 220-1 V3.1.1 (2017-02) ETSI EN 300 220-2 V3.3.1 (2025-03)
Certificate Number	:	HK2509024992E
Report No.	:	HK2509024992-1SR/-2EH/-1ER/-2ER
Registration Date	:	Oct. 21, 2025

Jason Zhou

Certification Manager

The information of the certificate can be checked through https://www.huak.com. The CE mark which is shown on the certificate can only be used under the conditions that the products complete with all of the relevant Directives of CE Declaration of Conformity. The Manufacturer should be responsible for the internal production control so that the products complied with the essential requirements of the above mentioned Directive(s). Certificate holder must notify all changes to the original certification laboratory of HUAK.

Shenzhen HUAK Testing Technology Co., Ltd.
Add.:1-2/F, B2 Building, Junfeng Zhongcheng Zhizao Innovation Park, Heping Community, Fuhai Street, Bao'an District, Shenzhen, China
Tel.:+86-0755-2302 9901 E-mail:info@huak.com Website:https://www.huak.com

This certificate is responsible for testing sample only.
Please refer to this corresponding test report to get testing process and data.

CERTIFICATE

ATTESTATION
Certificate of Compliance

Technical file of the company mentioned below has been inspected and audit has been completed successfully

The RoHS Directive 2015/863/EU amending Annex II to Directive 2011/65/EU has been taken as references for these processes.

Certificate's Holder	:	Shenzhen xu xing technology co., LTD
Address	:	Floor 3, building C, Huaze hi tech Industrial Park, Shiyan street,Bao'an District, Shenzhen
Manufacturer	:	Shenzhen xu xing technology co., LTD
Address	:	Floor 3, building C, Huaze hi tech Industrial Park, Shiyan street,Bao'an District, Shenzhen
Product Name:	:	XX LED RGB STRIP
Model No.:	:	XX5050RGB-60D, 5V-5050RGB-30D, 5V-5050RGB-60D, 12V-5050RGB-60D, 12V-5050RGB-30D, DY05RGB122, DY05RGB140, DY05RGB88
Trade Mark	:	N/A
Related Directive	:	Directive 2015/863/EU amending Annex II to Directive 2011/65/EU Directive (EU)2017/2102 amending Annex III to Directive 2011/65/EU
Test Method	:	IEC 62321-2:2021, IEC 62321-3-1:2013, IEC 62321-5:2013, IEC 62321-4:2013+AMD1:2017, IEC 62321-7-1:2015, IEC 62321-7-2:2017, IEC 62321-6:2015, IEC 62321-8:2017
Certificate Number	:	HK25090210619R
Report No.	:	HK25090210619-1RR
Issue date	:	October 20, 2025

Jason Hou

Certification Manager

HUAK TESTING REPORT CERTIFICATION APPROVAL

The information of the certificate can be checked through www. huak.com. The CE mark which is shown on the certificate can only be used under the conditions that the products complete with all of the relevant Directives of EC Declaration of Conformity. The Manufacturer should be responsible for the internal production control so that the products complied with the essential requirements of the above mentioned Directive(s). Certificate holder must notify all changes to the original certification laboratory of HUAK.

RoHS

ATTESTATION ◆ ATTESTATO ◆ ATESTACIÓN ◆ BESCHEINIGUNG ◆ ATTESTATION

Product Service

Attestation of Conformity

No. E8A 128892 0006 Rev. 00

Holder of Attestation: **GUANG TAI ENTERPRISE CO., LTD.**
Rm 402, Bldg 4. No.2 Dapianmei Rd.
Dapianmei Village, Dalingshan
523000 Dongguan, Guangdong
PEOPLE'S REPUBLIC OF CHINA

Name of Object: **Power supply (Furniture Power Distribution Unit)**

Model(s): **JN00-00-02K, JN00-00-03K, JN00-00-04K, JN02-00-21, JN02-00-22, JN02-00-23, JN02-00-23K, JN02-00-24K, JN02-00-24, JN02-00-22M, JN02-00-23M, JN02-00-23KM**

Description of Object:
Ratings:
Input: 220-250VAC, 50Hz, Max 16A, Max 3680W
USB A1/USB A2 Output: 5.0VDC, 2.1A, 10.5W Max
Total USB output: 5.0VDC, 2.1A, 10.5W Max
Protection Class: I

Tested according to:
EN 55032:2015/A1:2020
EN 55035:2017/A11:2020
EN IEC 61000-3-2:2019/A1:2021
EN 61000-3-3:2013/A2:2021

This Attestation of Conformity is issued on a voluntary basis according to the Directive 2014/30/EU relating to electromagnetic compatibility. It confirms that the listed apparatus complies with the principal protection requirements of the directive and is based on the technical specifications applicable at the time of issuance. It refers only to the particular sample submitted for conformity assessment. For details see: www.tuvsud.com/ps-cert

Test report no.: 657602423101

Date, 2025-01-10

(Laurent Yuan)

This Attestation does not replace the regulatory EU Declaration of Conformity (DoC) and does not allow for CE marking. After preparation of the necessary documentation and establishing compliance to requirements of all applicable directives, the manufacturer may sign a DoC and apply the CE marking. The DoC is issued under the sole responsibility of the manufacturer.

经续检验
SLG-CPC Testlaboratory

SLG-CPC Testlaboratory Dongguan Co., Ltd.

VERIFICATION OF CONFORMITY

No.: 24050295C-C

This verification is issued for

GUANG TAI ENTERPRISE CO LTD

Rm 402, Bldg 4, No.2 Dapianmei Rd., Dapianmei Village, Dalingshan, DONGGUAN, Guangdong, China

The product with designation of type

Furniture Power Distribution Unit

Trade Mark: N/A

Model/s: JN00-00-02K; JN00-00-02KM; JN00-00-03K; JN00-00-03KM; JN00-00-04; JN00-00-04K; JN00-00-04KM; JN02-00-21; JN02-00-22; JN02-00-22M; JN02-00-23; JN02-00-23K; JN02-00-23M; JN02-00-23KM; JN02-00-24K; JN02-00-24; JN02-00-24M; JN02-00-24KM

This is to declare that the technical file of the products complies the essential requirements of below European Directives:

Low Voltage Directive 2014/35/EU;

Reference standards:

IEC 60884-2-7:2011+ AMD1:2013
IEC 60884-1:2002 + AMD1:2006
IEC 62368-1:2018 (EN IEC 62368-1:2020 + A11:2020)

This verification is based on the following file

90340-24-70-24-PP001

And is valid only if the product is manufactured in accordance with the corresponding tested sample. This verification is the result of tests carried out on one sample and does not represent the serial production of this product.

The CE mark as show can be used, under the responsibility of the manufacturer, after completion of an EC Declaration of Conformity and compliance with all relevant EC Directives.

This verification of conformity loses its validity in the following cases:
- if the reference standards and/or EC Directives are modified;
- if any modifications are made to the model/s without our approval.

CE

SLG-CPC Testlaboratory Dongguan Co., Ltd. 经续检验

2024-05-11
.....
(Date)

.....
Owen Zhan
Technical Director

No. 11, Wu Song Road,
Dongcheng Subdistrict,
Dongguan, Guangdong China

Tel: 86-769-22607797
Fax: 86-769-22607907
http://www.cpcteam.com

Certificate of Compliance

RoHS Directive 2011/65/EU appendix Ⅱ Revised instructions (EU) 2015/863 of the European parliament and of the council on the restriction of the use of certain hazardous substances in electrical and electronic equipment

Issue Date: Nov.27, 2025

Company Name	:	**GUANG TAI ENTERPRISE CO.,LTD**
Address	:	**Rm402,Bldg 4,No.2 Dapianmei Rd.Dapianmei Village,Dalingshang DONGGUAN GUANGDONG**
Manufacturer	:	**GUANG TAI ENTERPRISE CO.,LTD**
Address	:	**Rm402,Bldg 4,No.2 Dapianmei Rd.Dapianmei Village,Dalingshang DONGGUAN GUANGDONG**
Sample Name	:	**Furniture Power Distribution Unit**
Sample Model	:	**JN02-00-21;JN02-00-111;JN02-00-112;JN02-00-212; JN02-00-22;JN00-00-02K;JN02-00-113K;JN02-00-113; JN02-00-213;JN02-00-23;JN00-00-03K;JN00-00-03; JN00-00-04K;JN00-00-04; JNO2-00-23**

This certificate of compliance is based on a test procedure or an evaluation of the above-mentioned product. This is to certify that the above-mentioned product is in compliance with the RoHS Directive 2011/65/EU appendix Ⅱ Revised instructions (EU) 2015/863 of the European parliament.

It is only valid in connection with the test report (Report No.: COBO25110736)

RoHS

Signed for and on Behalf of COBO

Sam Xie

Sam Xie / Technical Manager

GUANGDONG TI COBO TESTING CO.,LTD.

EA601,Yishili Building No.9,Zongbu 2nd Road,Songshan Lake Sci.&Tech. Park,Dongguan,Guangdong,China

Tel:86-769-26622263 Fax:86-769-26622012