LAGOA

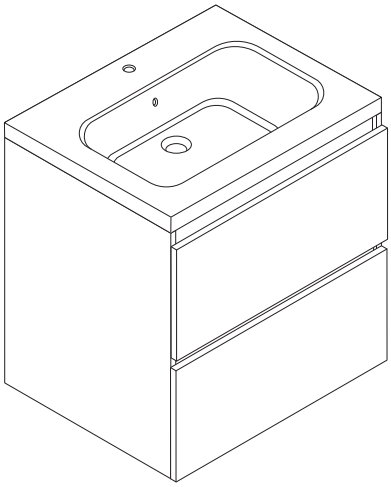

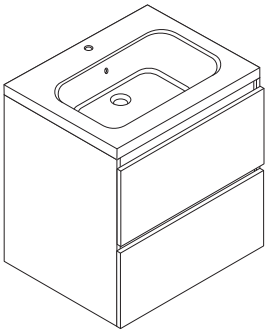

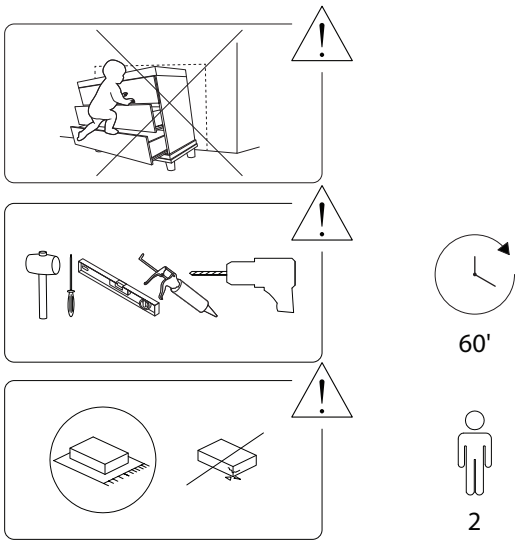
60'
2

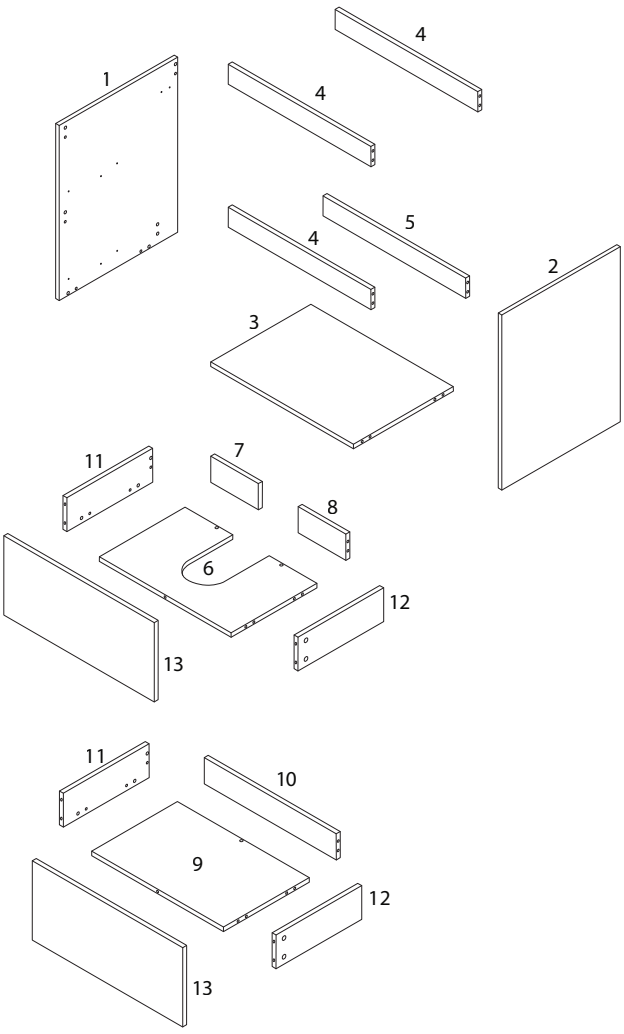
1
4
4
4
5
2
3
11
7
8
6
12
13
11
10
9
12
13

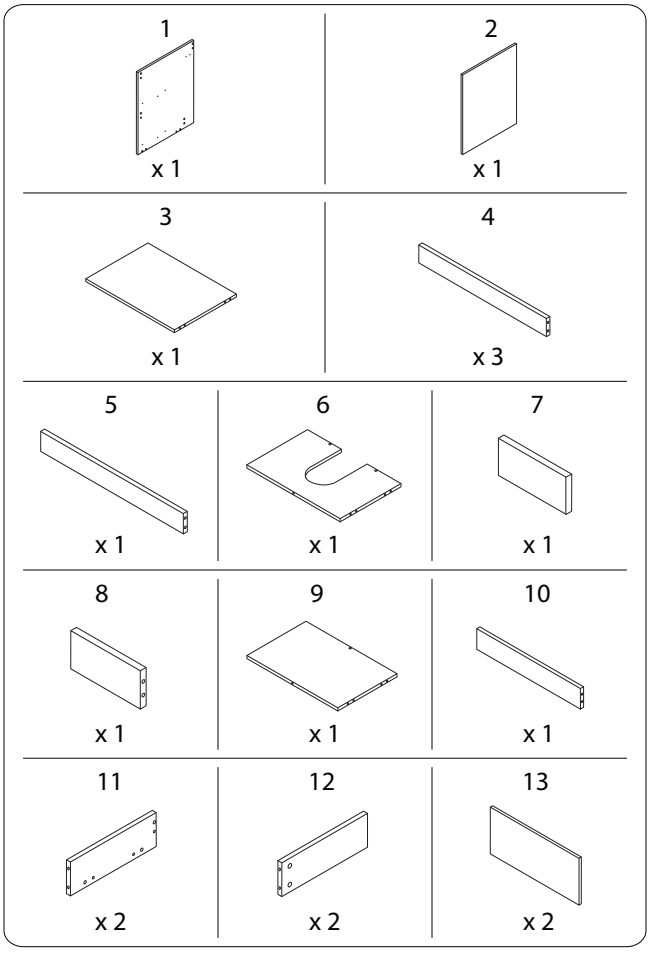
1
x 1
2
x 1
3
x 1
4
x 3
5
x 1
6
x 1
7
x 1
8
x 1
9
x 1
10
x 1
11
x 2
12
x 2
13
x 2

A	B1	B2	C
x 37	x 37	x 37	x 24

D1	D2	D3
x 2	x 2	ST4 x 30 x 4

E	F	G
ST4 x 14 x 19	x 2	x 2

H	I	J
ST4 x 25 x 4	x 1	M4 x 40 x 1

K	L	M
x 4	M4 x 40 x 4	x 1

1

1	2	D1	D3
x 1	x 1	x 2	ST4 x 30 x 4

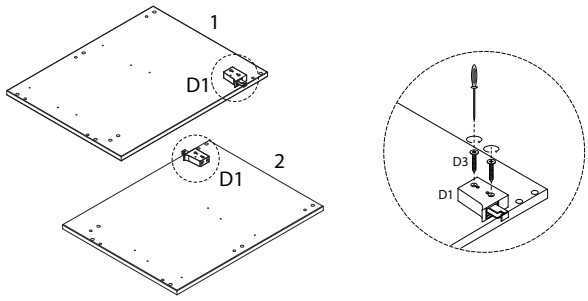

2

A
x 12

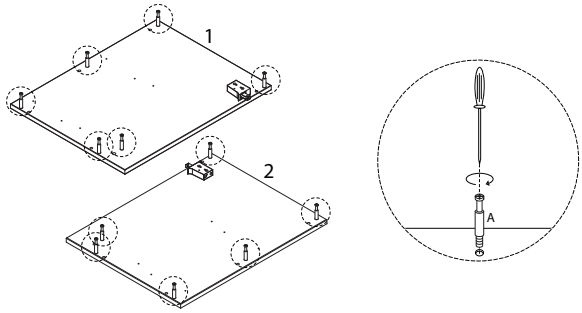

3

E	F	G
ST4 x 14 x 12	x 2	x 2

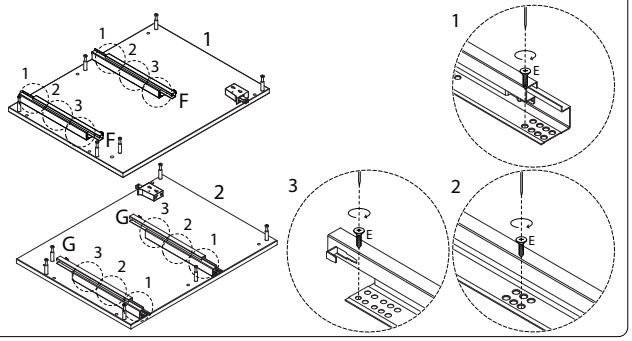

5 x 2

11	12	13	A
x 1	x 1	x 1	x 11

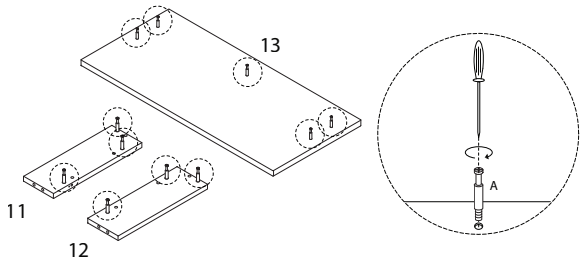

4

6	9	A
x 1	x 1	x 3

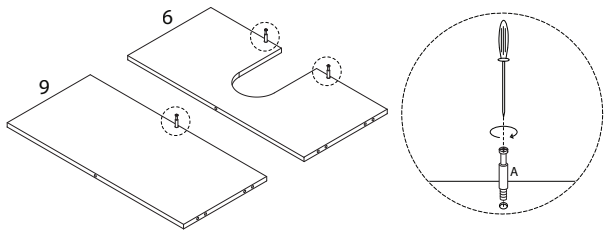

6

3	7	8	C
x 1	x 1	x 1	x 14

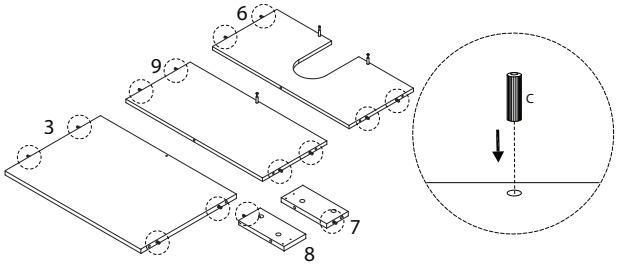

7

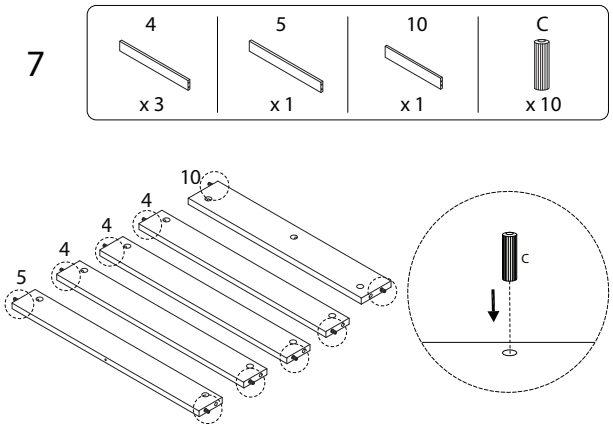

8

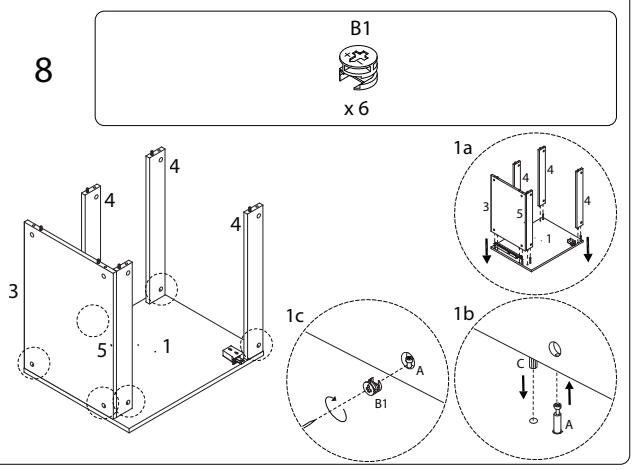

9

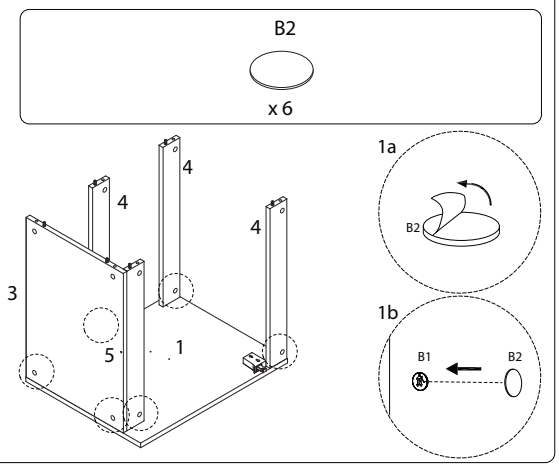

10

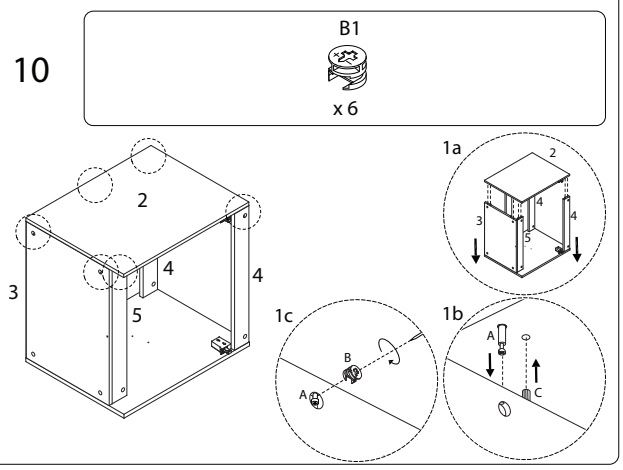

11

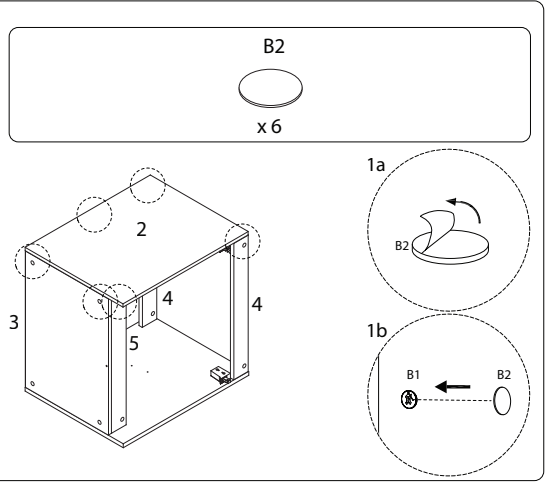

12

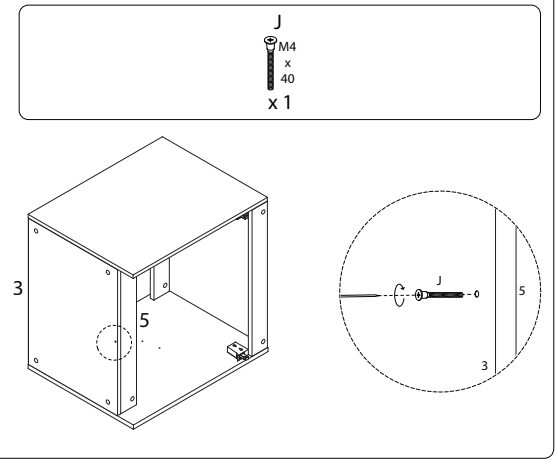

13

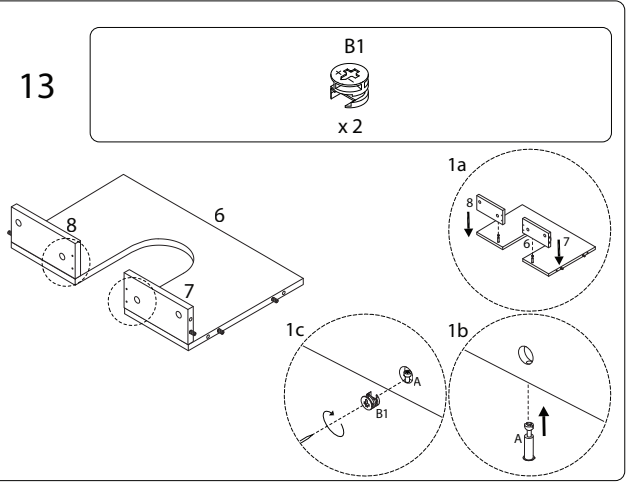

14

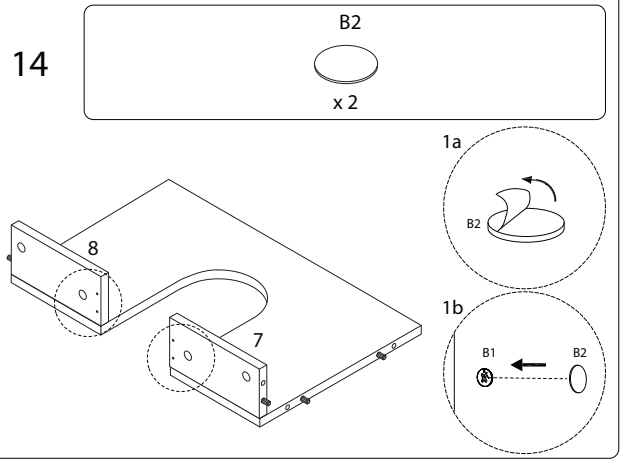

15

B1

x 6

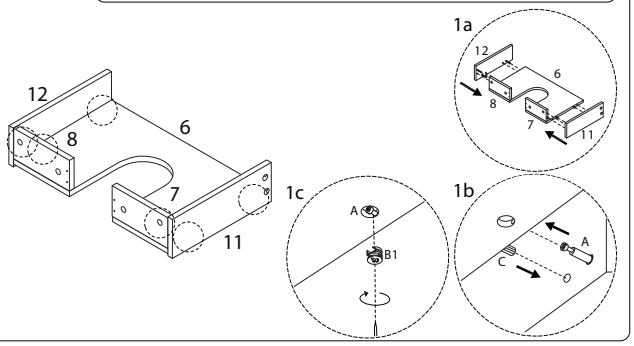

16

B2

x 6

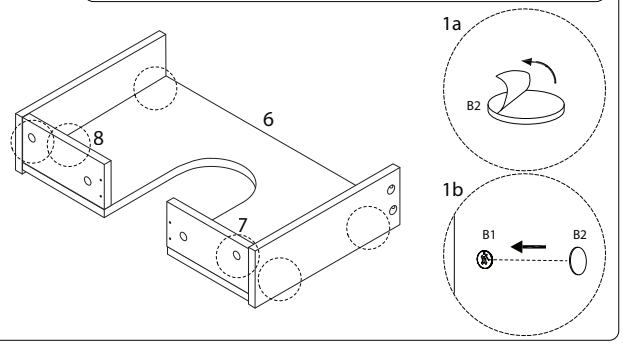

17

E

ST4 x 14

x 7

I

x 1

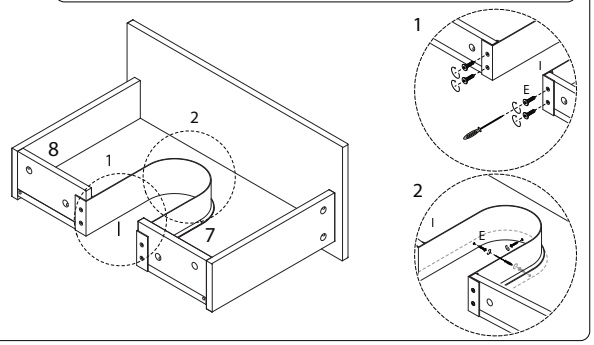

18

B1

x 5

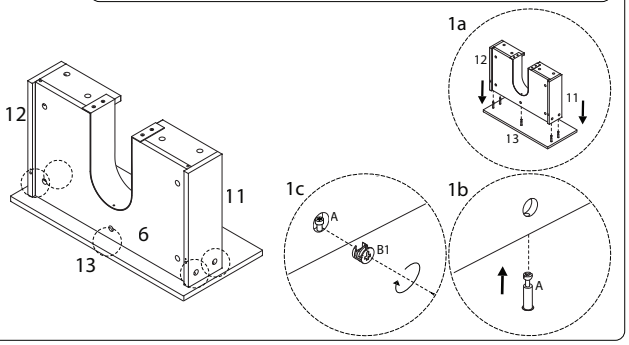

19

B2

x 5

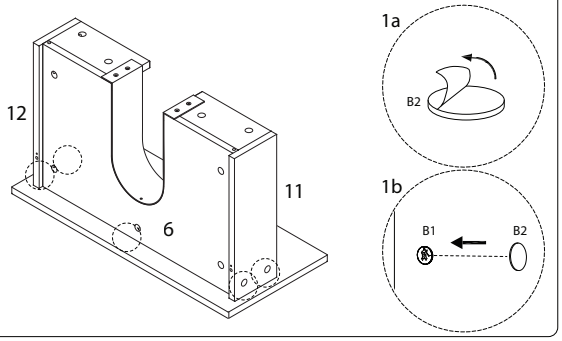

20

B1

x 1

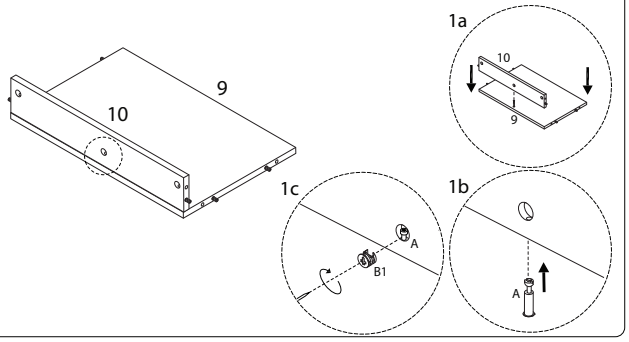

21

B2

x 1

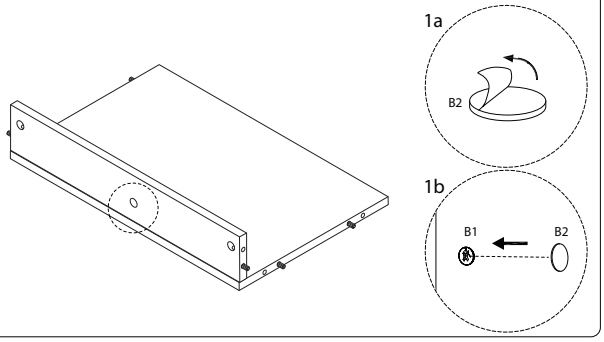

22

B1

x 6

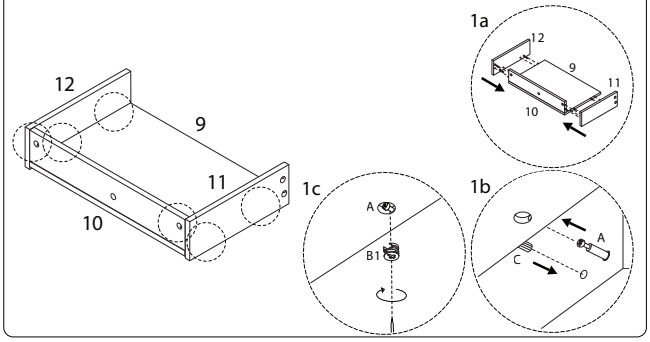

23

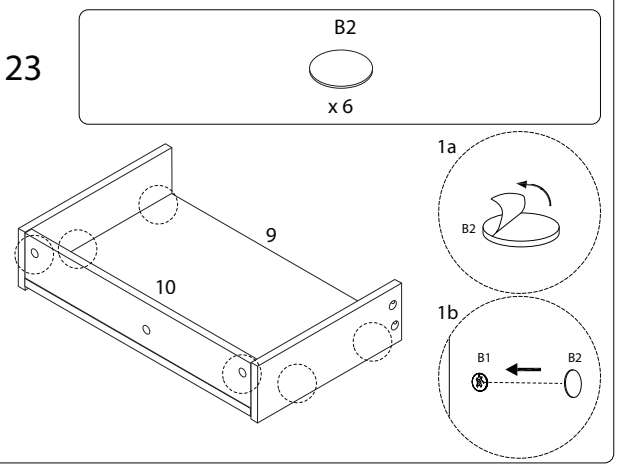

24

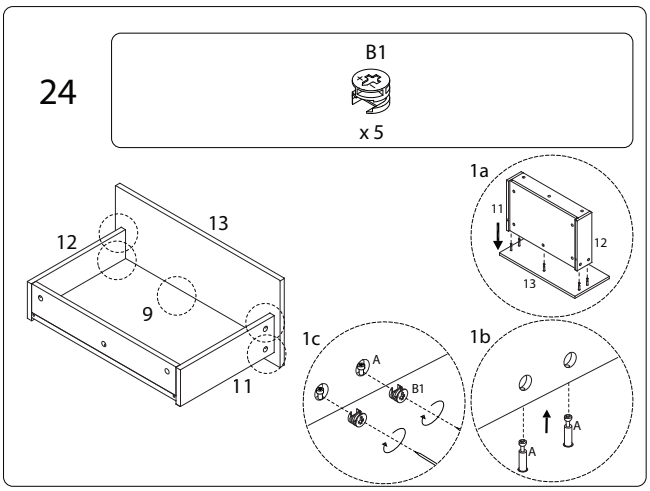

25

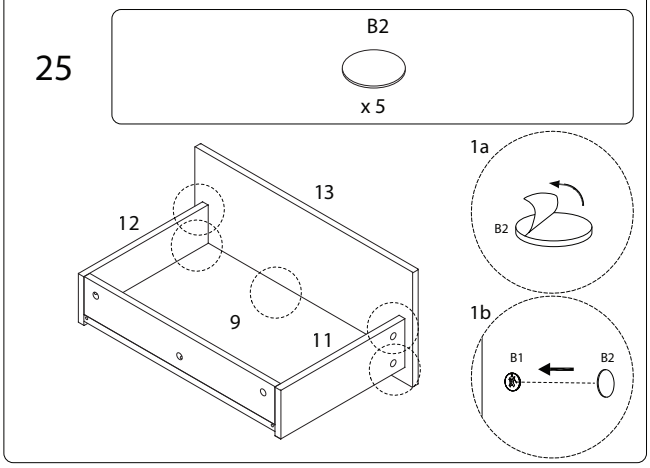

26

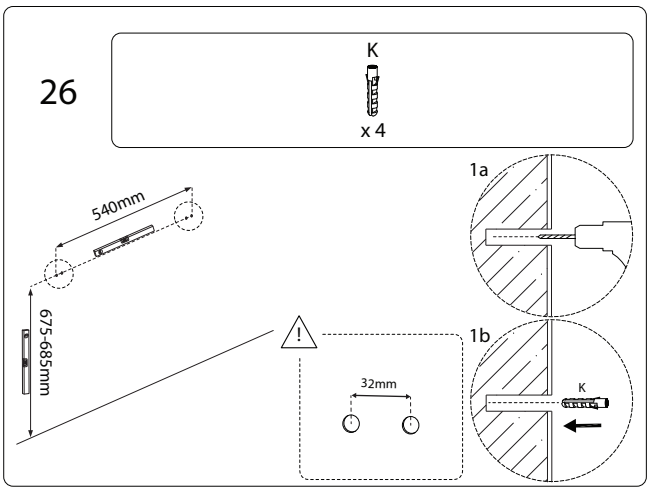

27

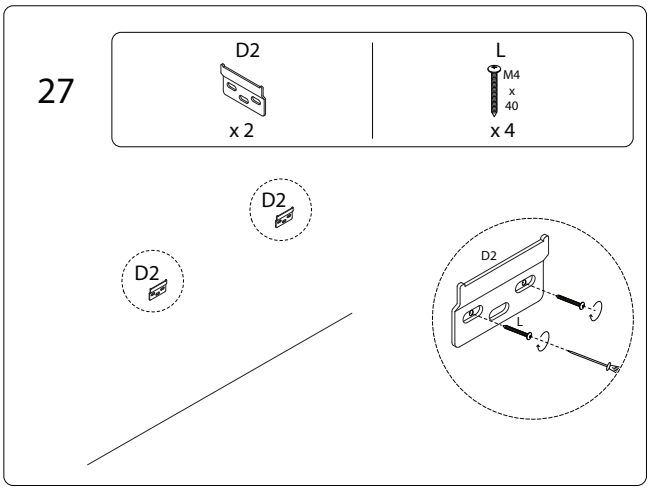

!

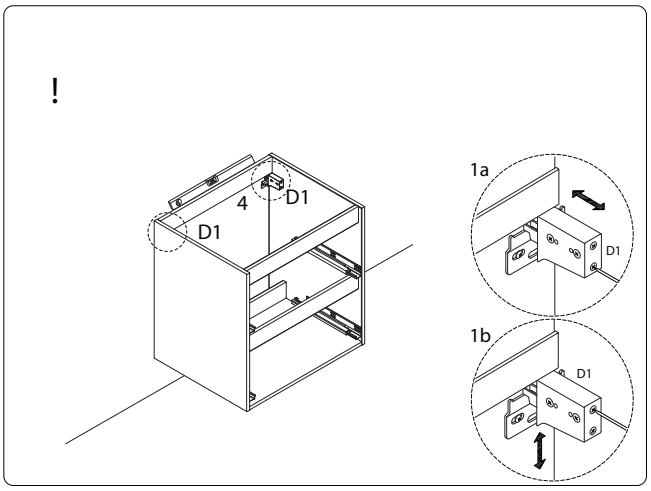

28

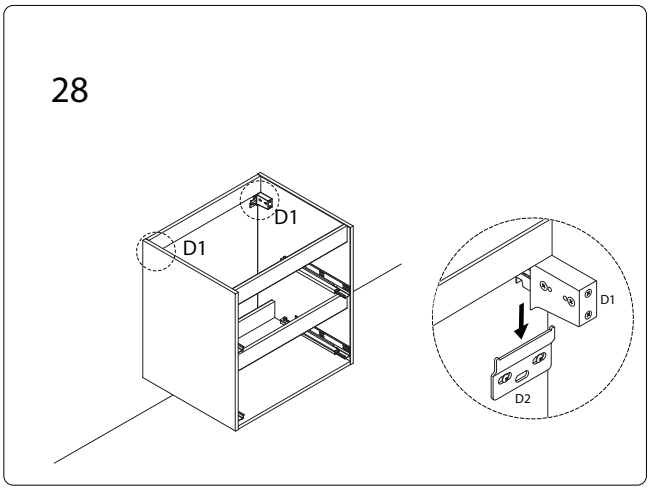

29

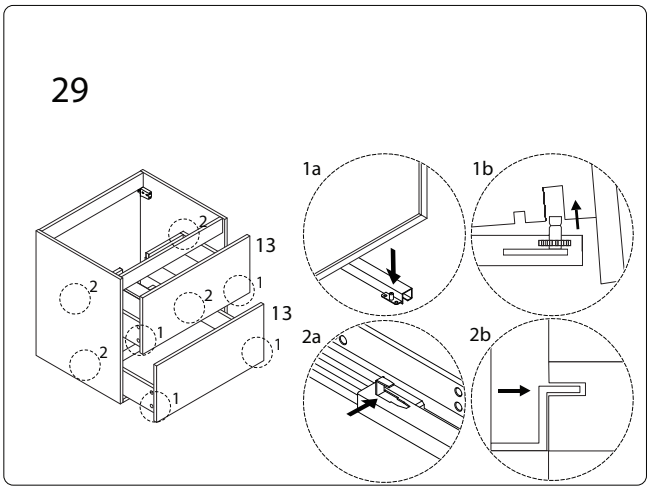

30

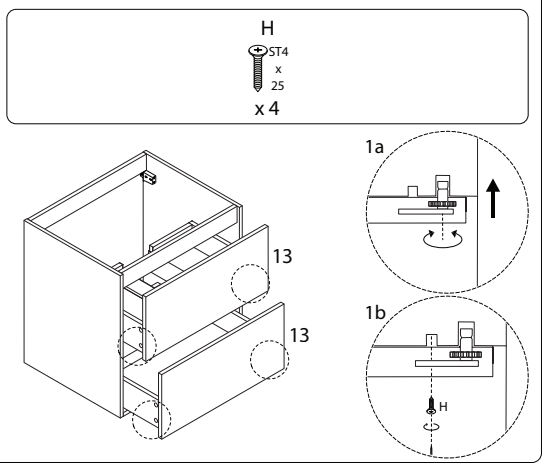

31

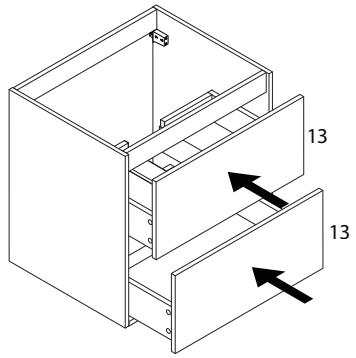

32

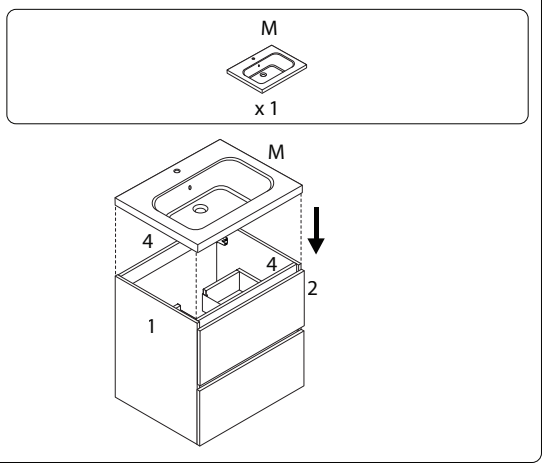
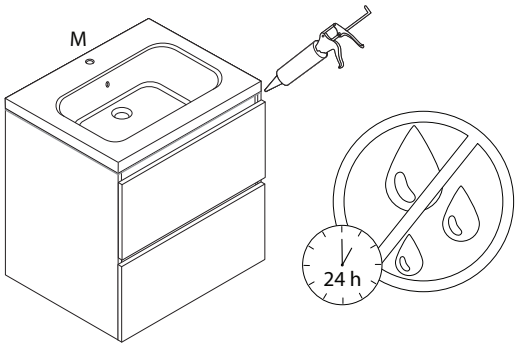
33