NURMO

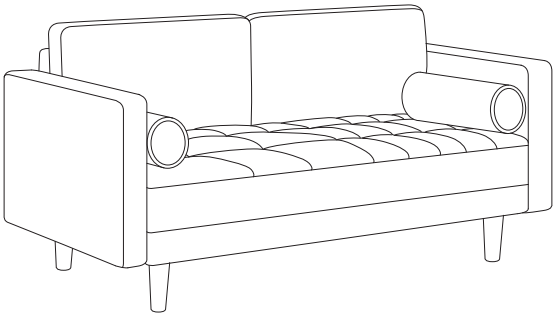

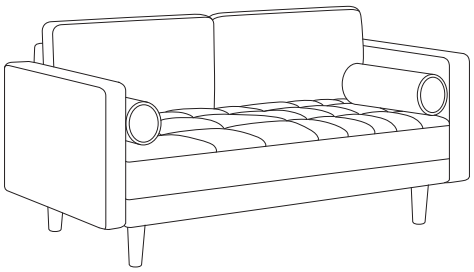

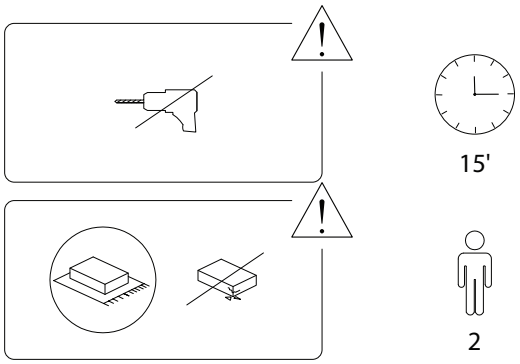

1/6

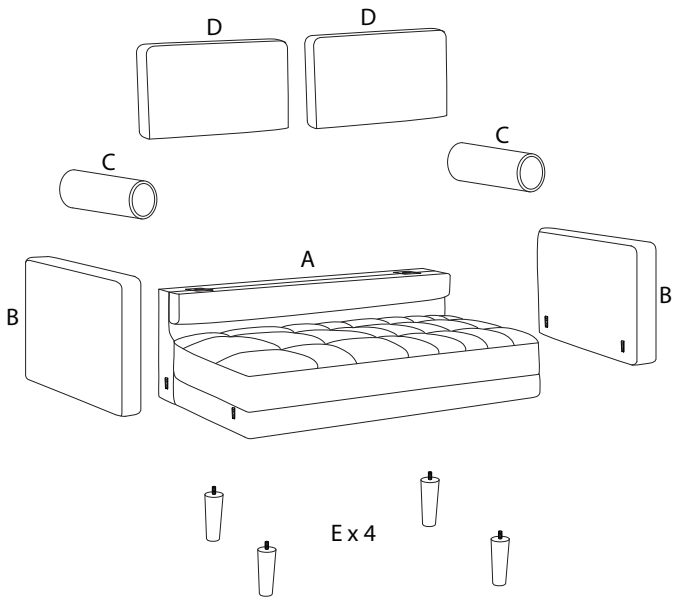

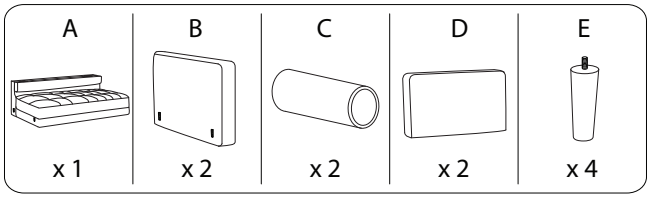

2/6

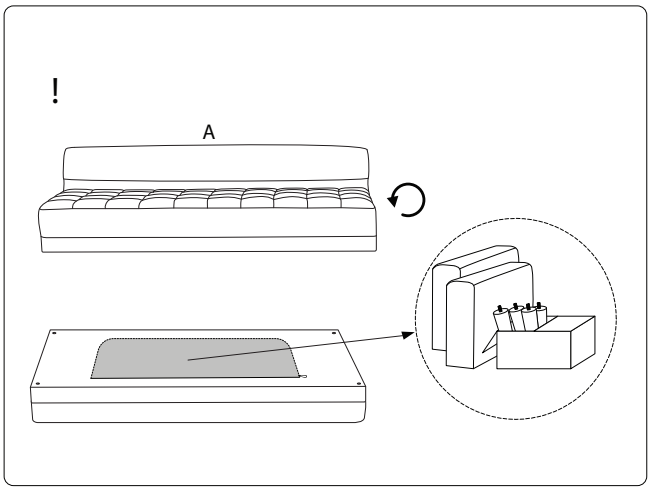

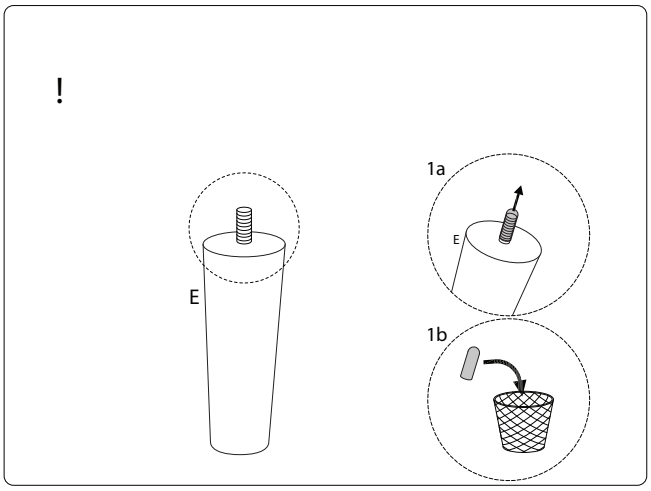

3/6

1

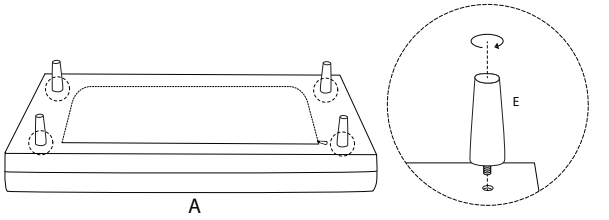

3

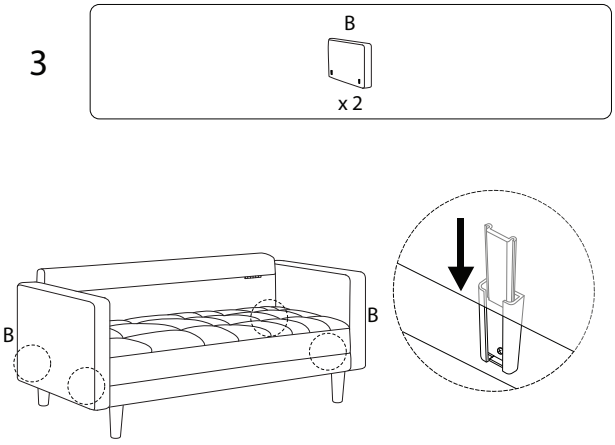

2

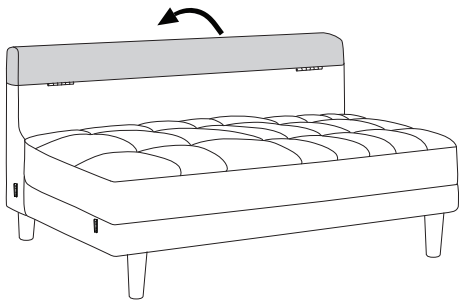

4

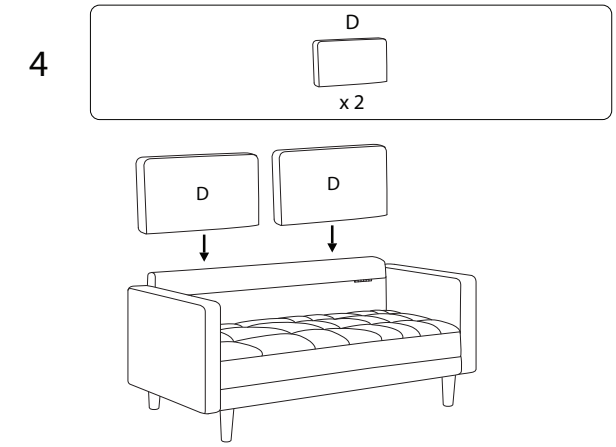

5

