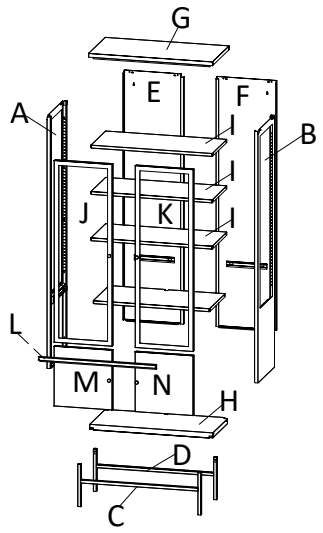

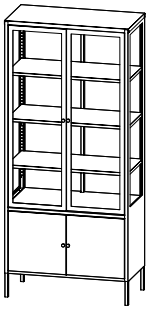

1-11

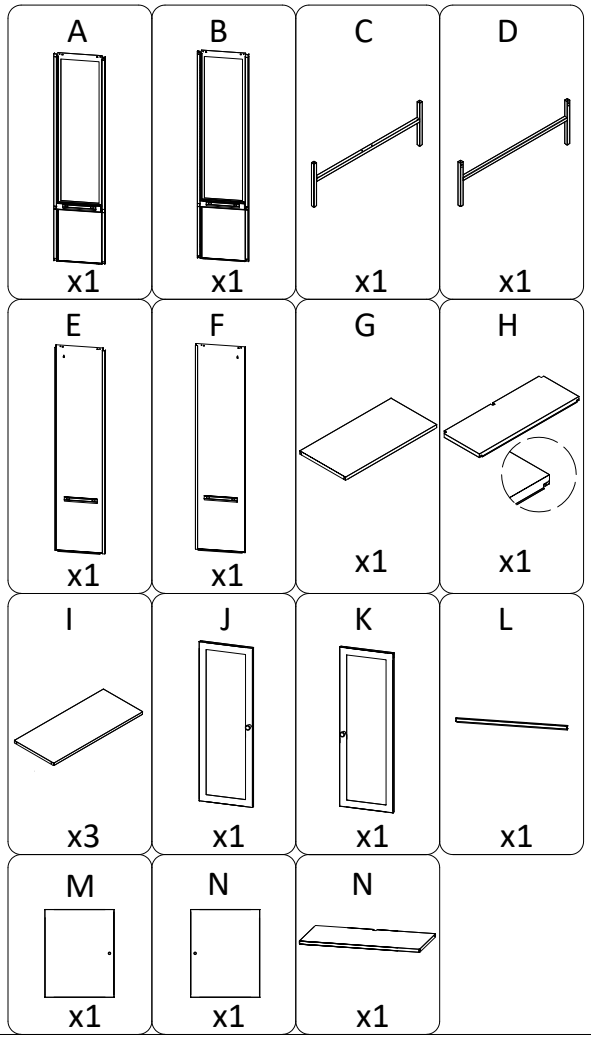

2-11

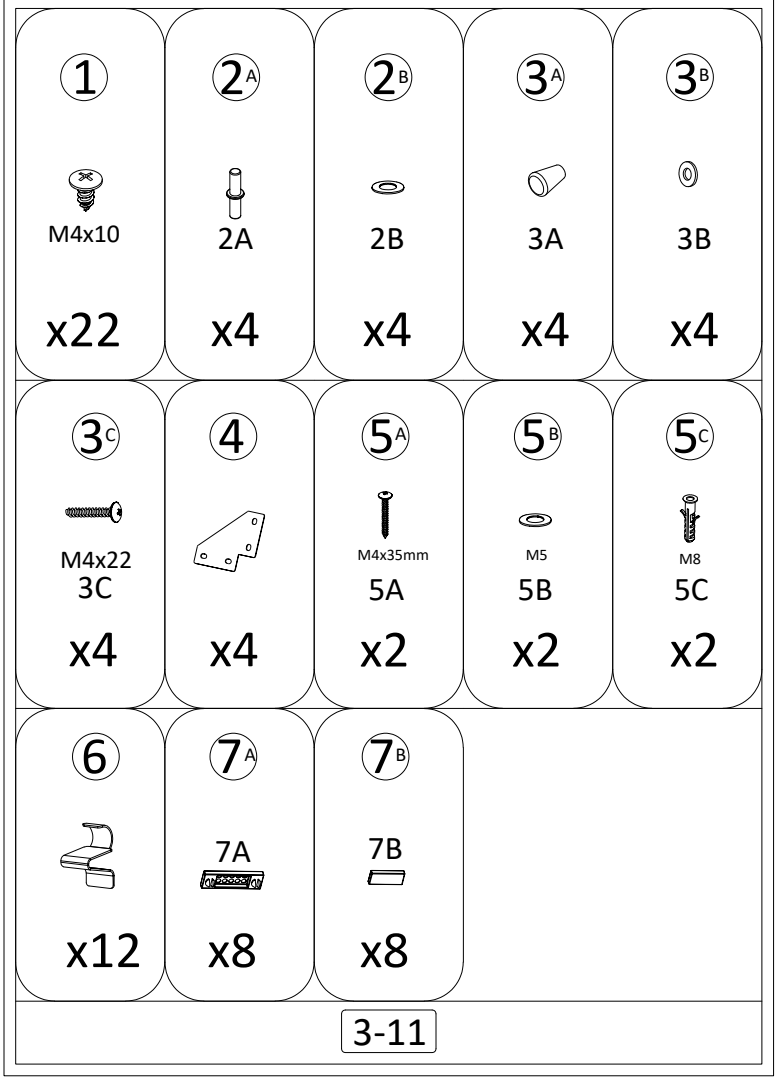

3-11

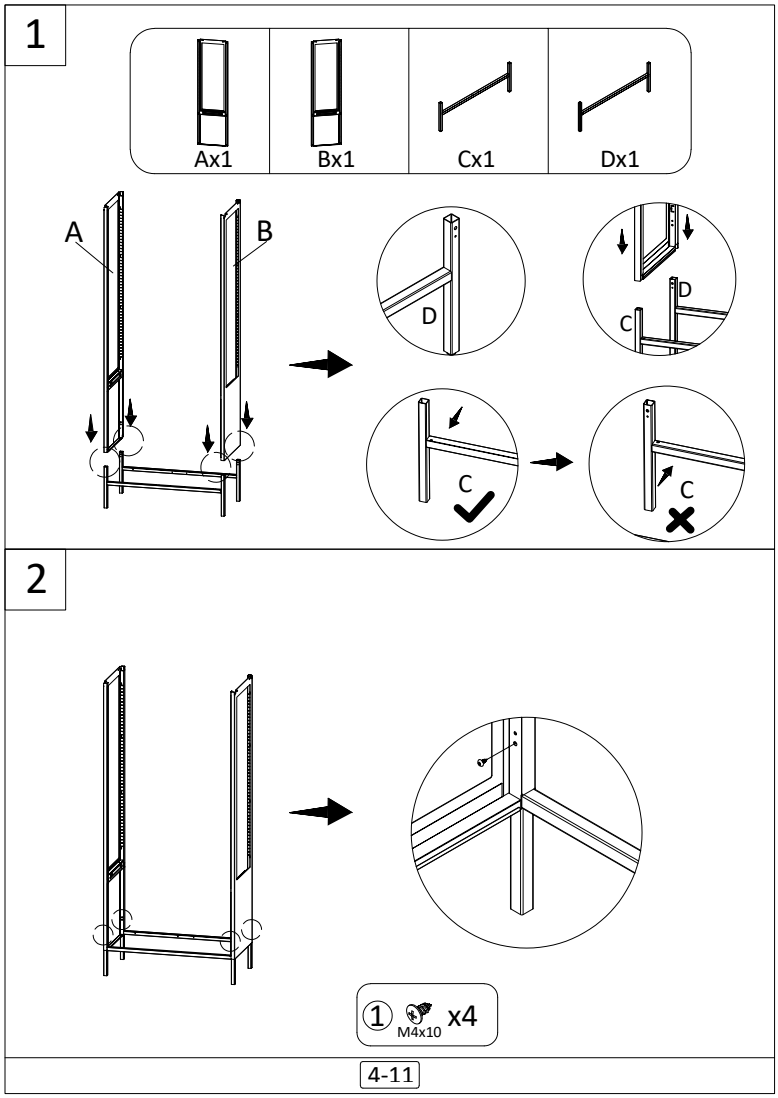

4-11

3

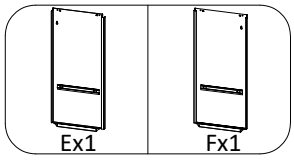

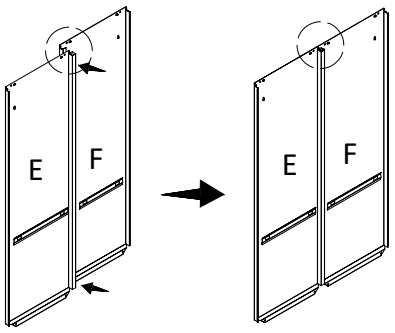

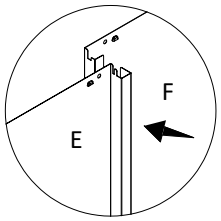

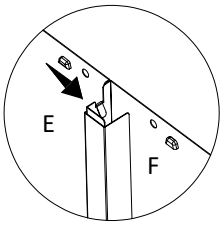

4

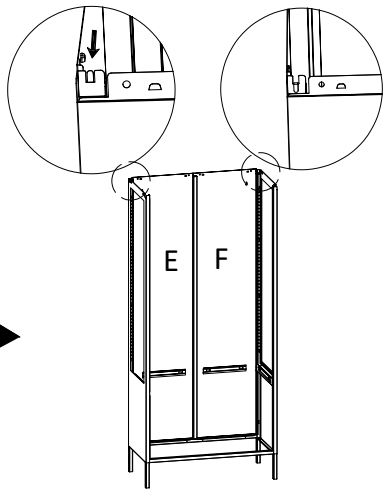

5-11

5

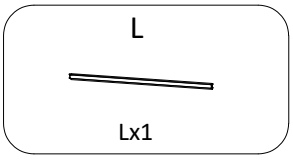

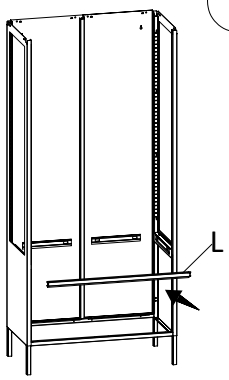

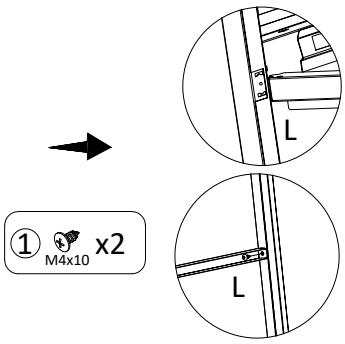

6

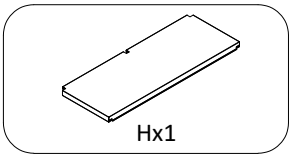

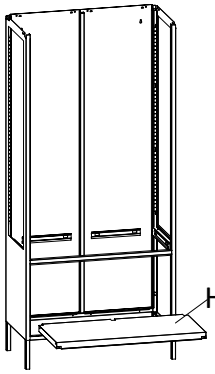

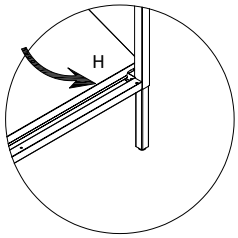

6-11

7

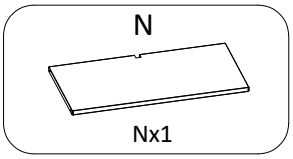

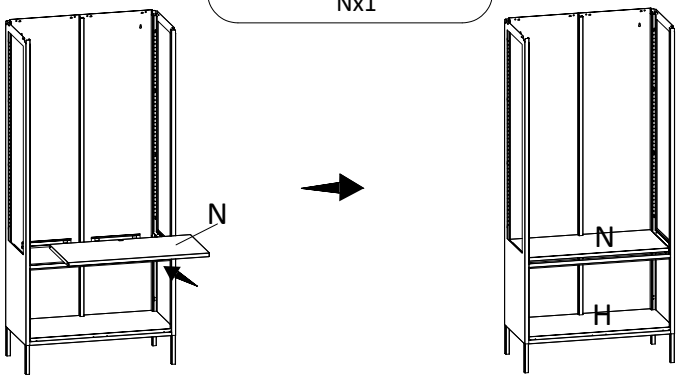

8

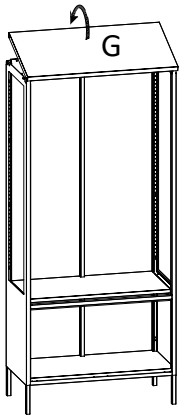

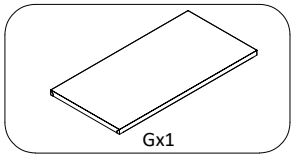

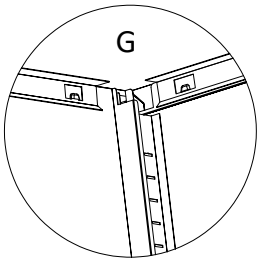

7-11

9



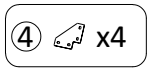

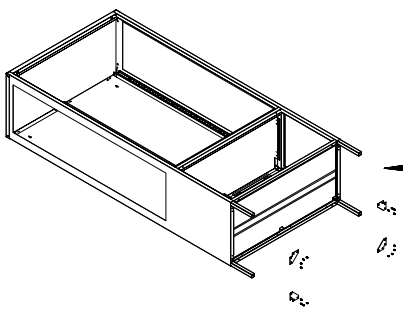

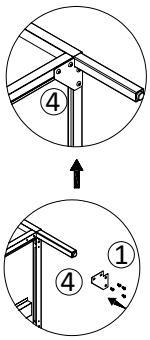

10

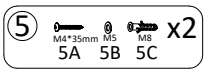

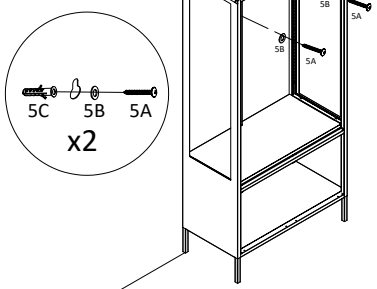

8-11

11

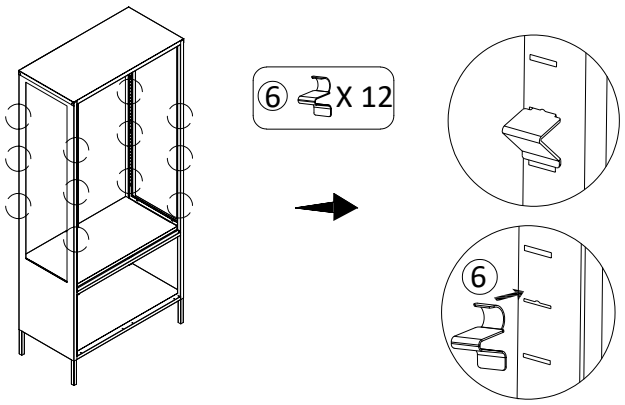

12

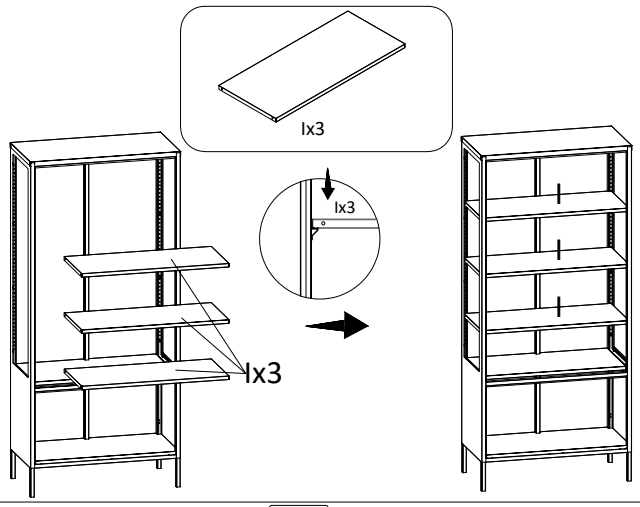

9-11

13

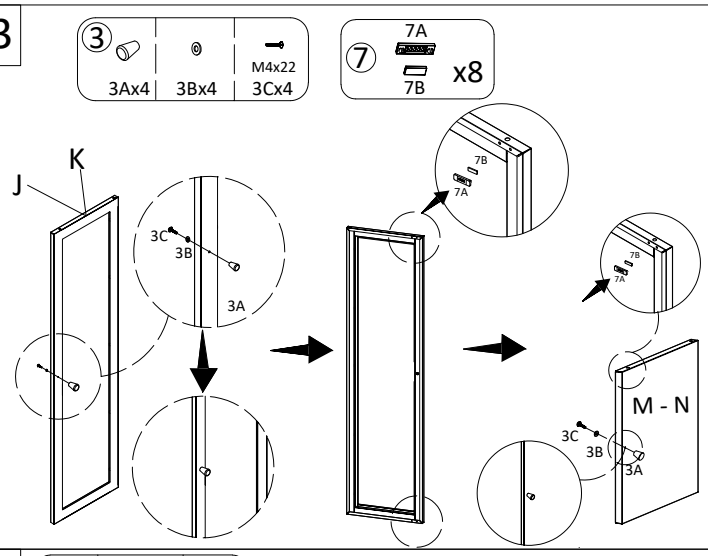

14

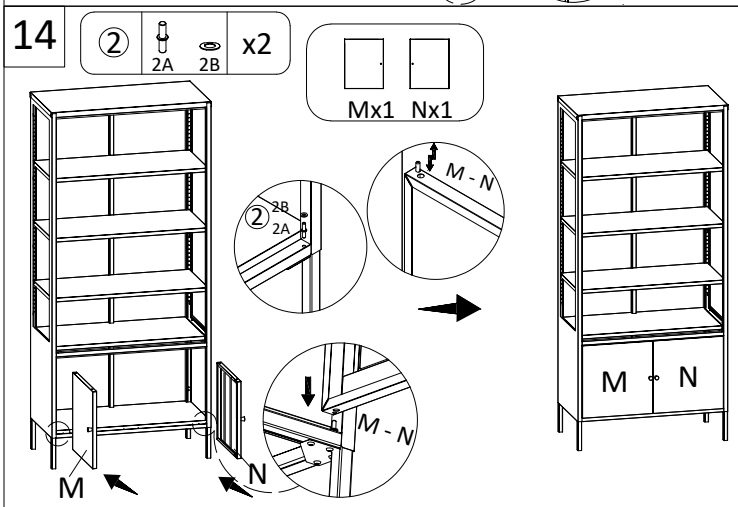

10-11

15

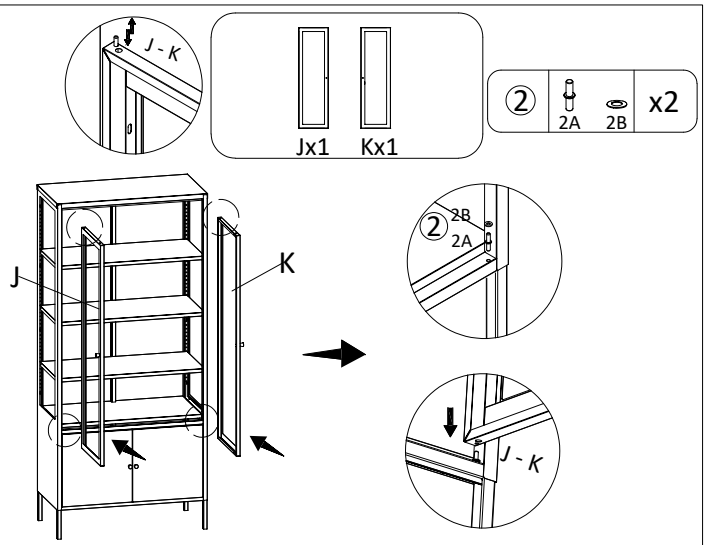

16

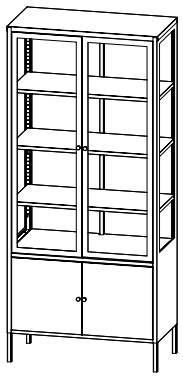

11-11