MARE

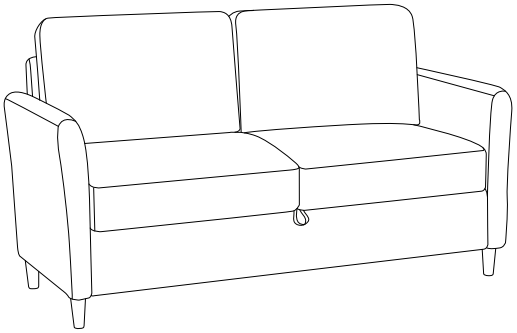

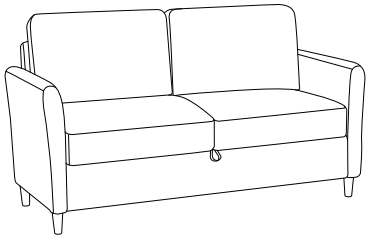

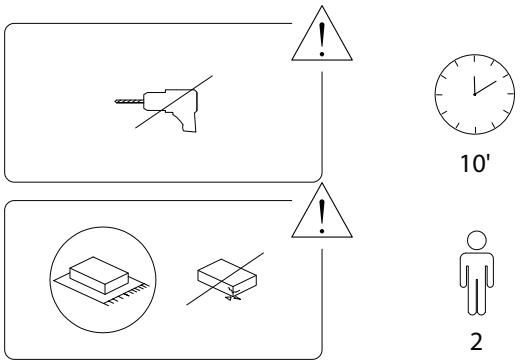

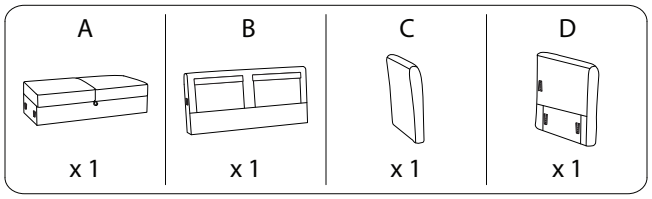

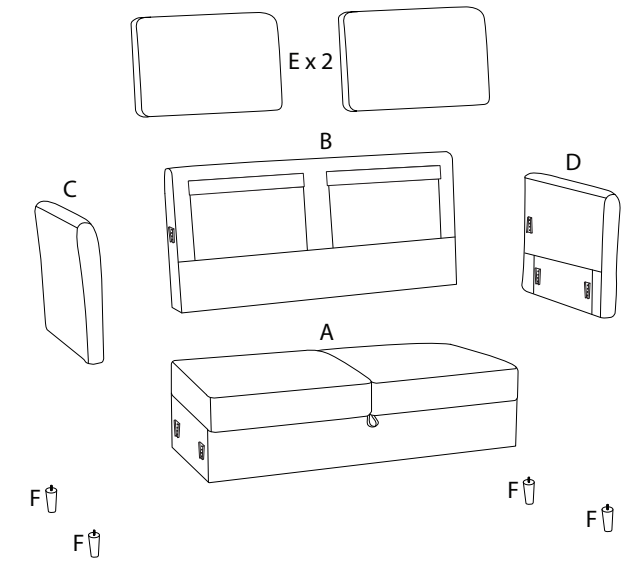

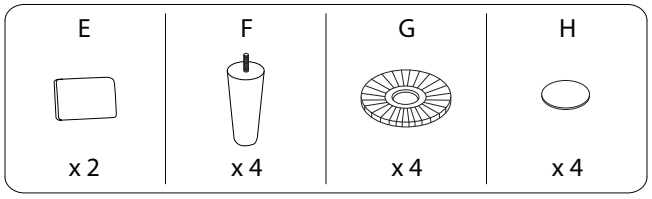

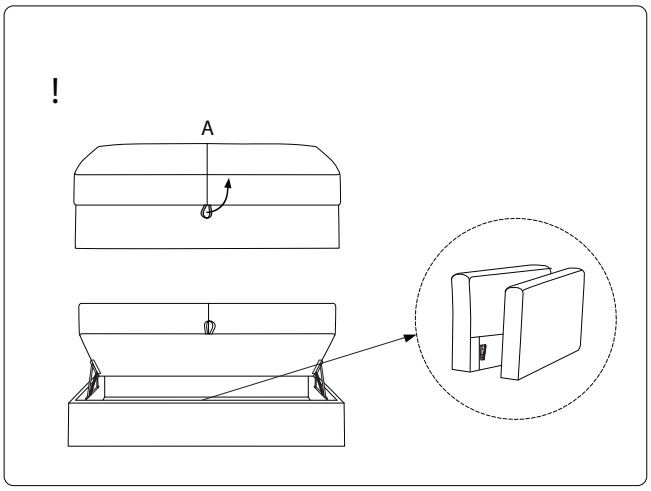

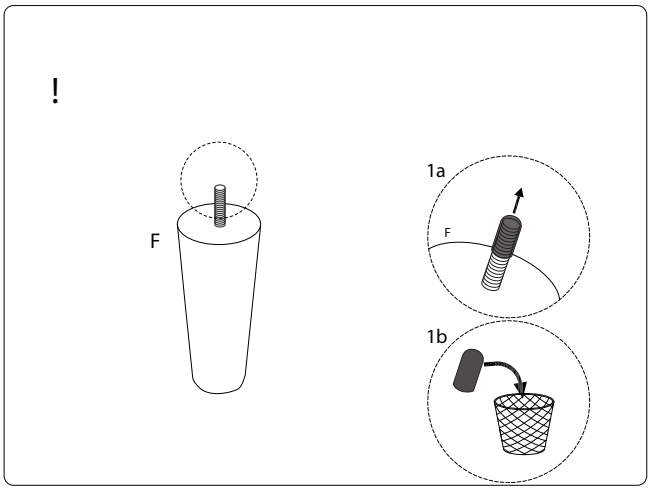

1

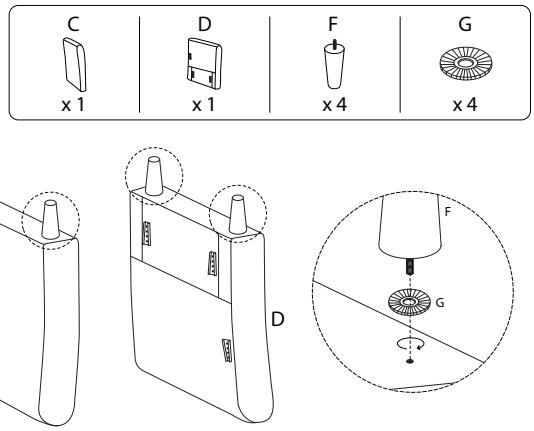

2

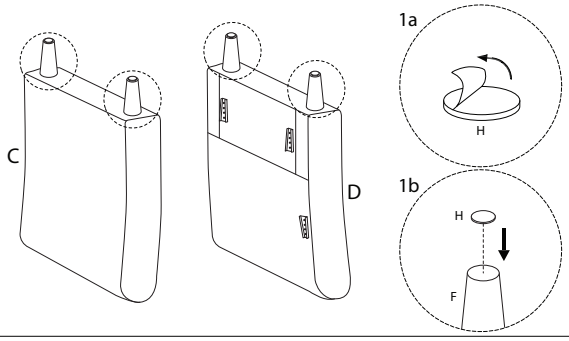

4/6

3

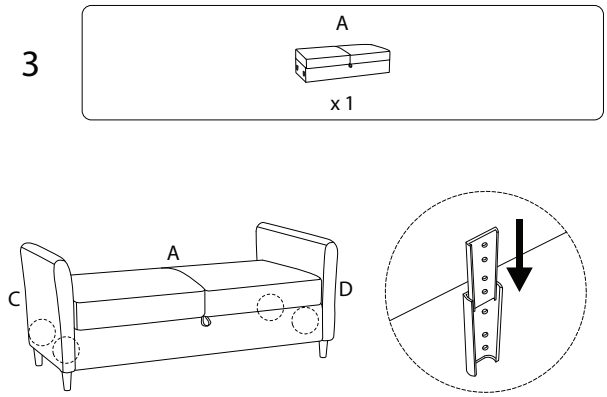

4

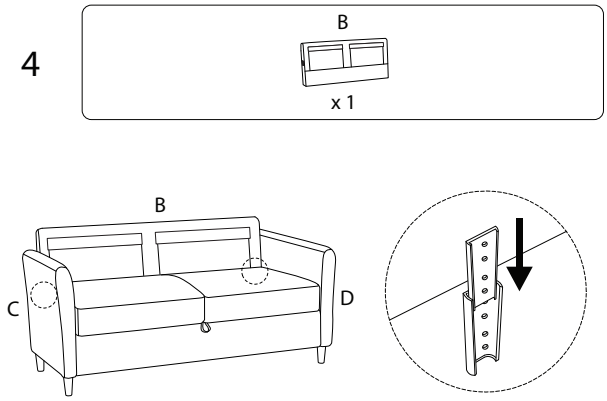

5/6

5

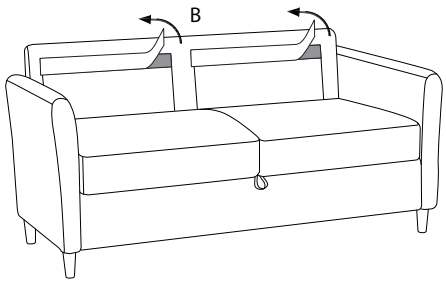

6

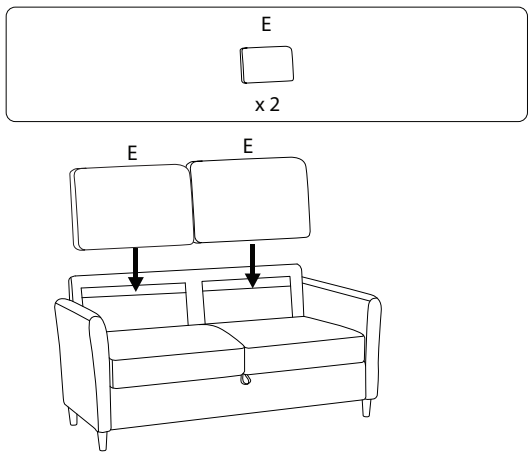

6/6