MARE

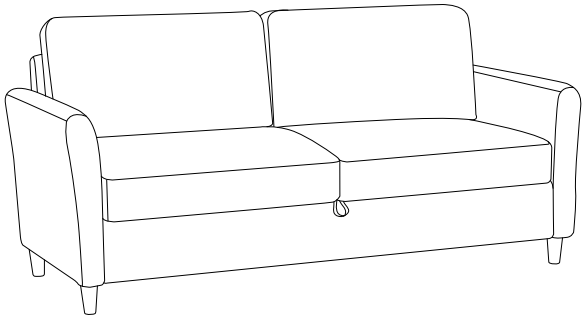

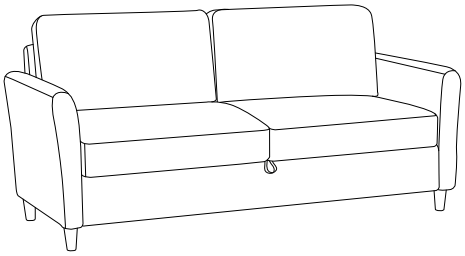

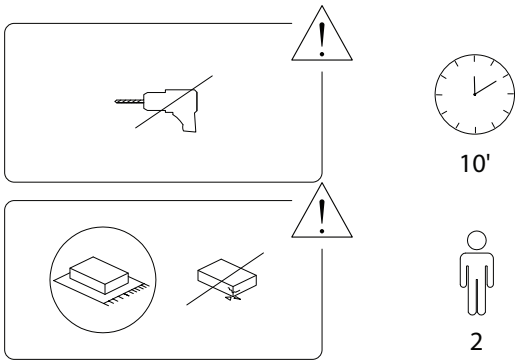

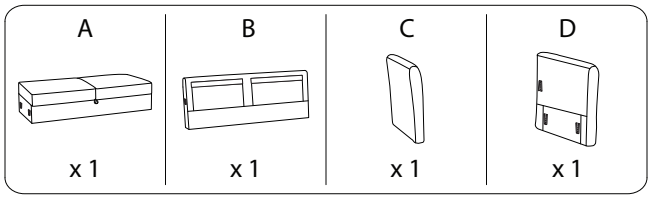

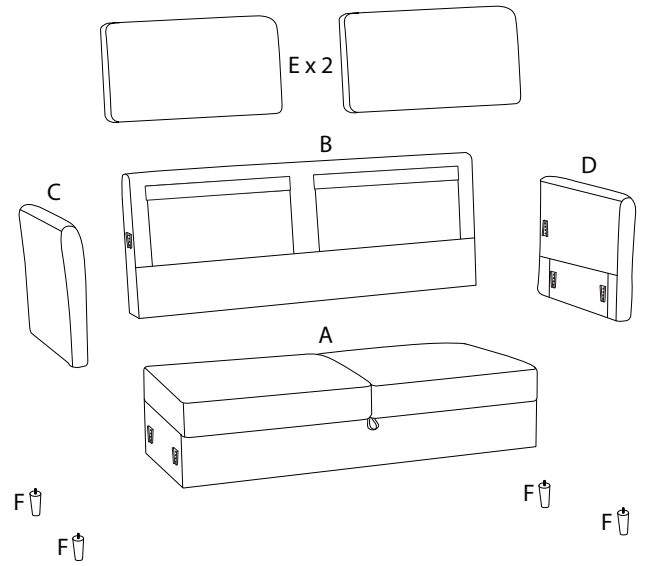

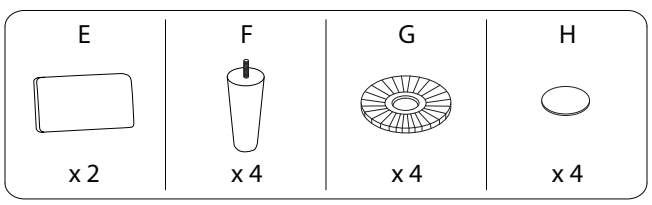

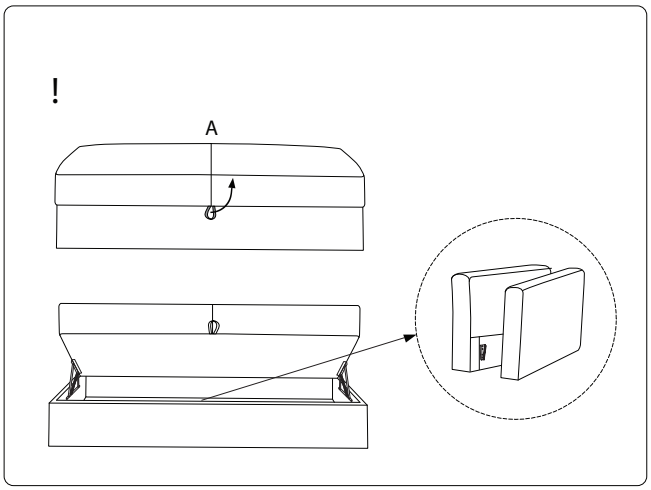

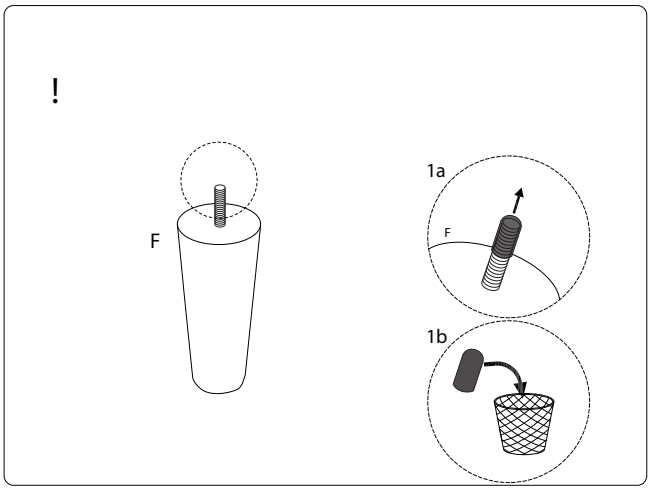

1

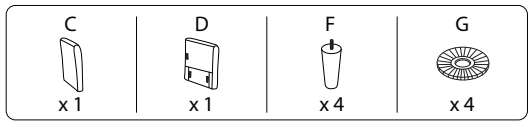

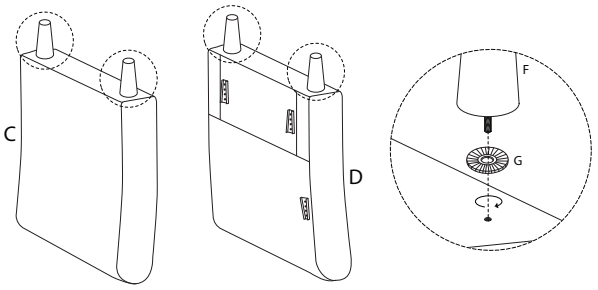

2

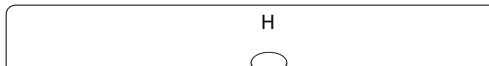

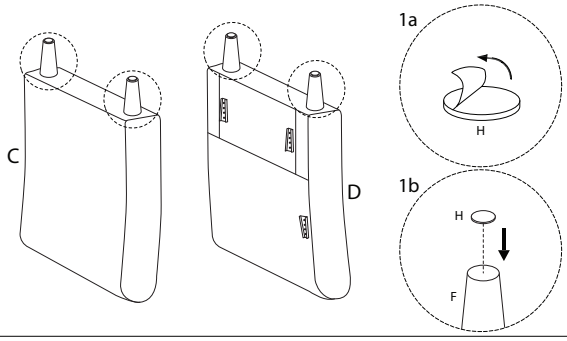

4/6

2117/MARE/280524/

3

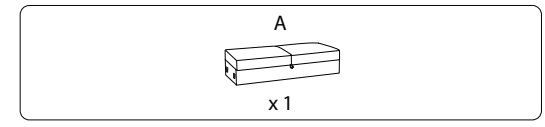

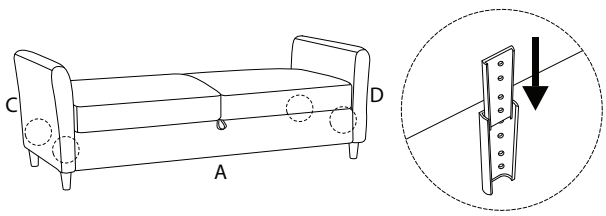

4



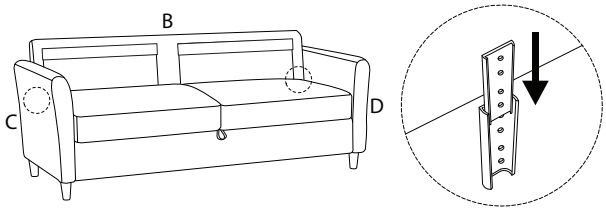

5/6

2117/MARE/280524/

5

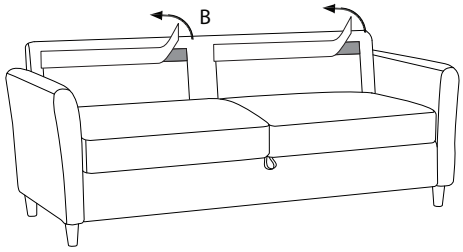

6

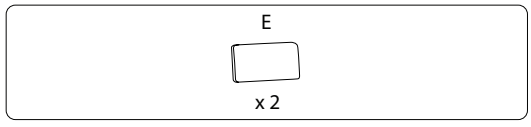

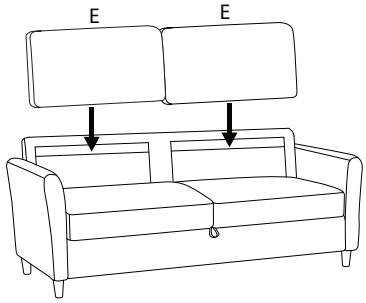

6/6

2117/MARE/280524/