AROLE

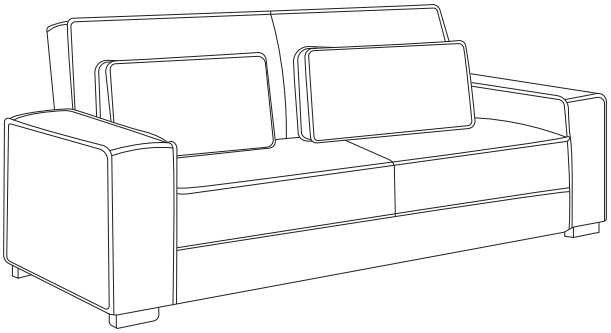

1/6

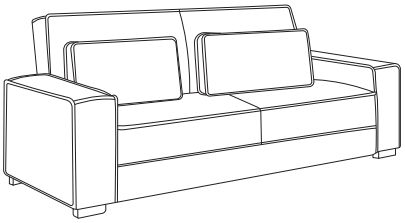

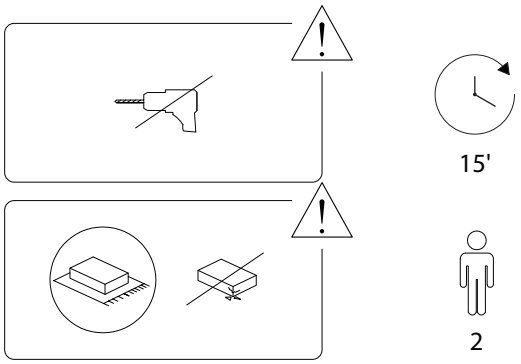

2/6

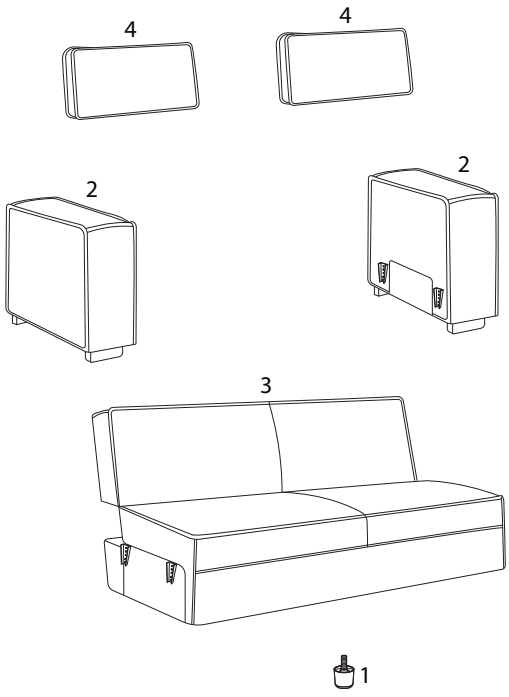

1	2	3	4
x 1	x 2	x 1	x 2

3/6

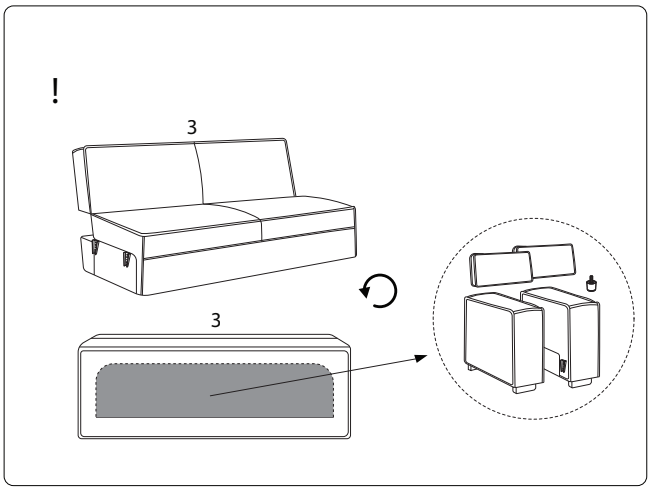

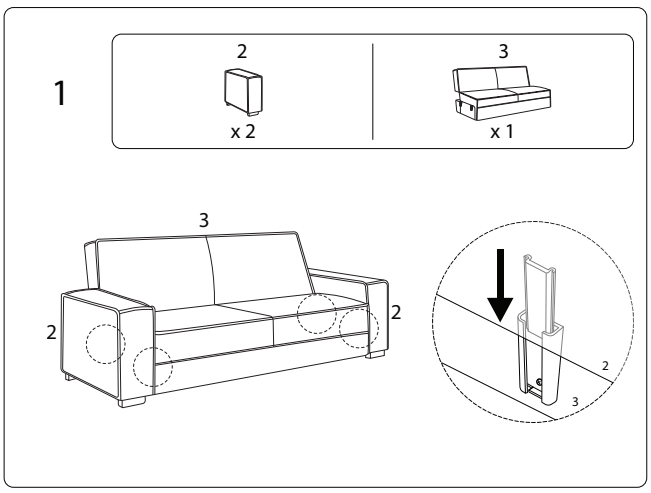

4/6

2

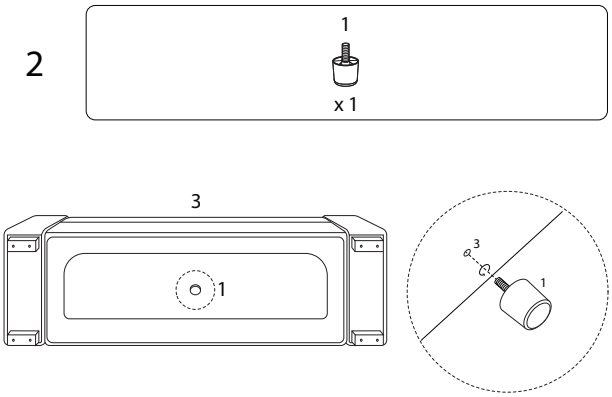

!

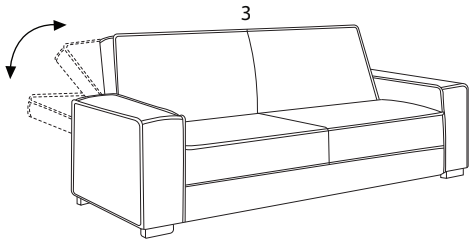

3

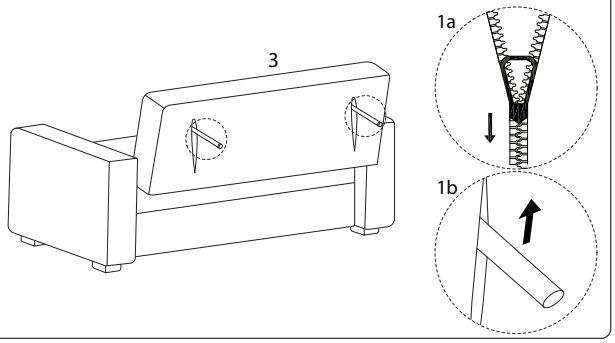

4

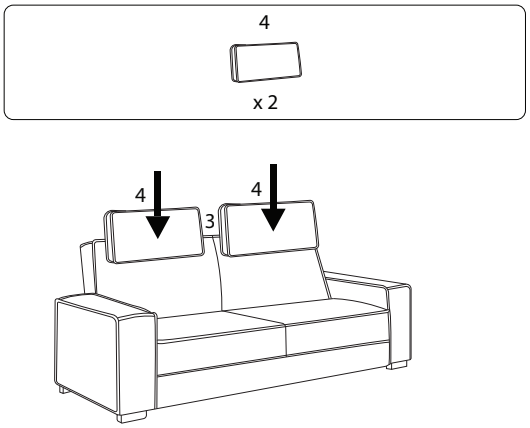

1082/AROLE/300326/