WALPOLE

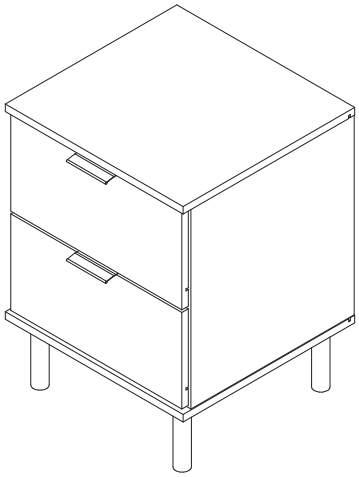

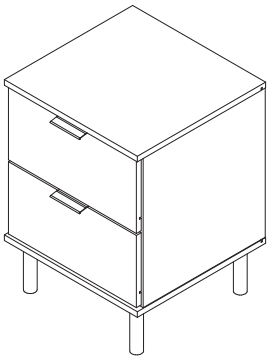

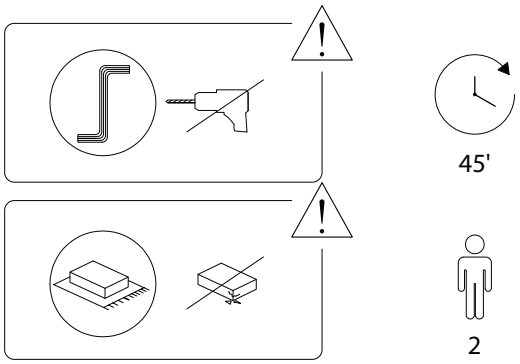

1	2	3	4
x 1	x 1	x 1	x 1

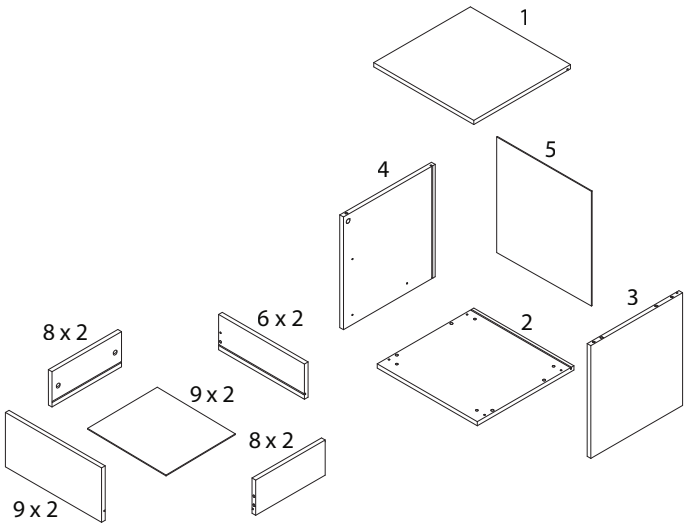

5	6	7	8	9
x 1	x 2	x 2	x 4	x 2

AT	AZ	B
x 16	x 1	x 12
C	**CA**	**CR1**
x 12	M3 x 16 x 4	x 2
CR2	**CR3**	**CR4**
x 2	x 2	x 2
D	**DZ**	**E**
M3.5 x 14 x 20	M7 x 50 x 4	M4 x 40 x 4
PE	**PX**	**U**
x 4	x 2	x 4

1 x 2

6	9	B
x 1	x 1	x 4

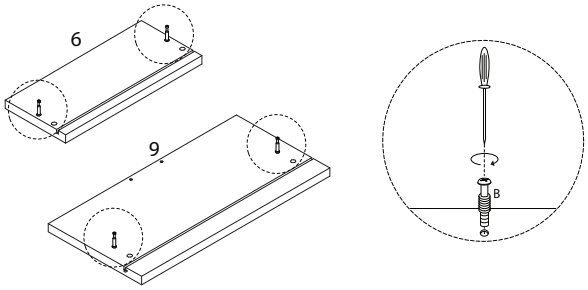

3 x 4

8	AT
x 1	x 2

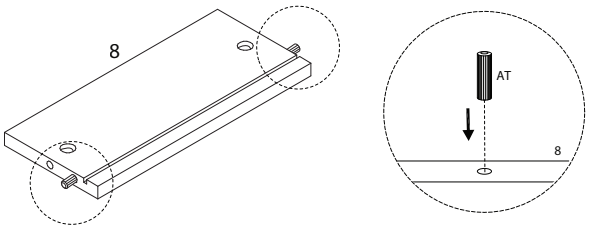

2 x 2

D	PX
M3.5 x 14	
x 2	x 1

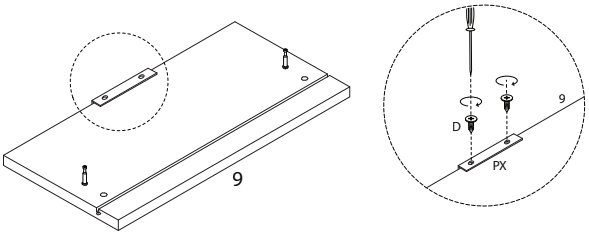

4 x 2

C
x 2

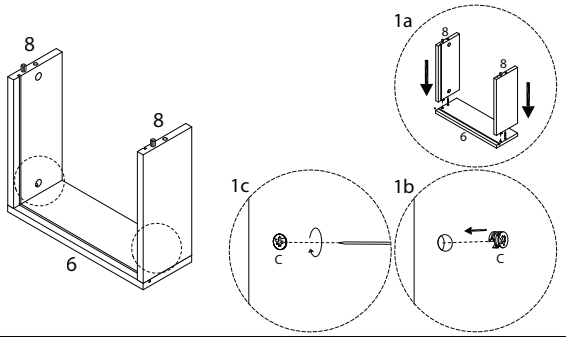

5 x 2

7
x 1

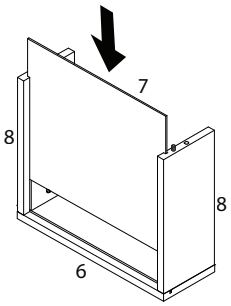

7 x 2

CR3	CR4	D
		M3.5 x 14
x 1	x 1	x 4

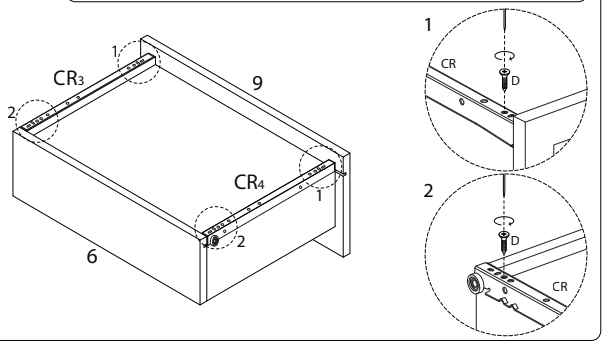

6 x 2

C
x 2

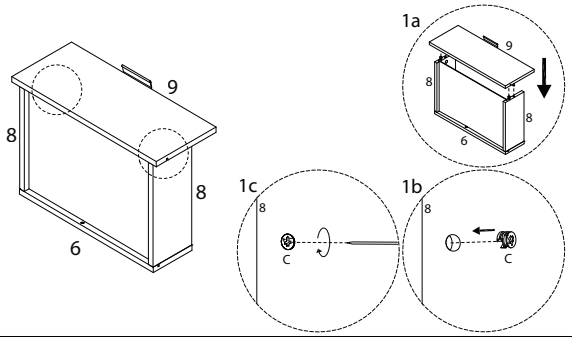

8

2	AZ	DZ	PE
		M7 x 50	
x 1	x 1	x 4	x 4

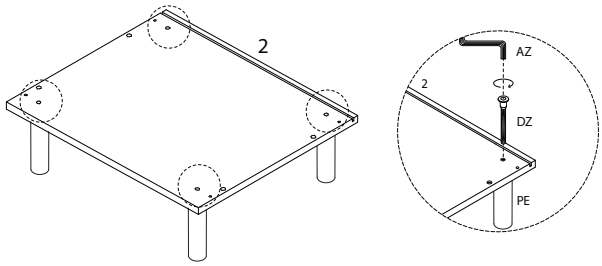

9

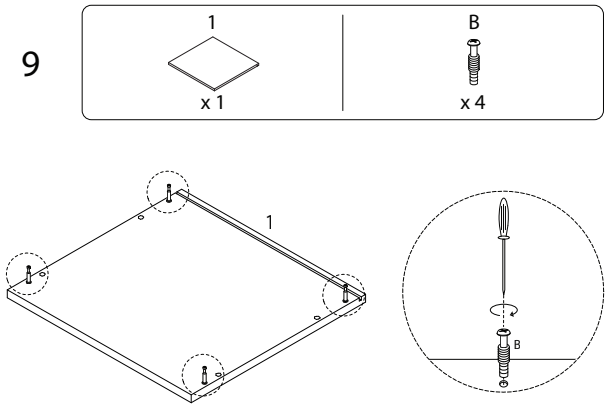

10

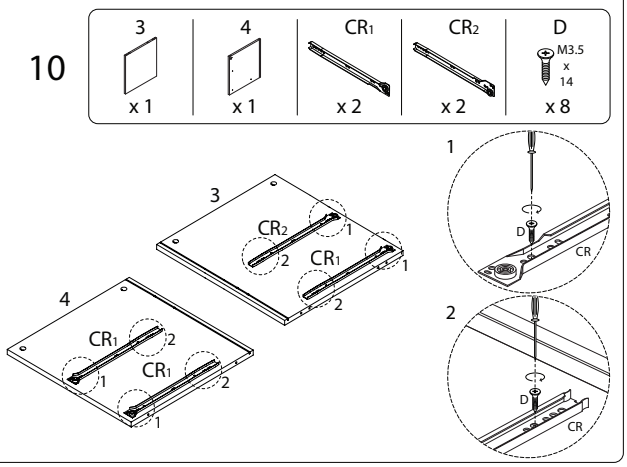

11

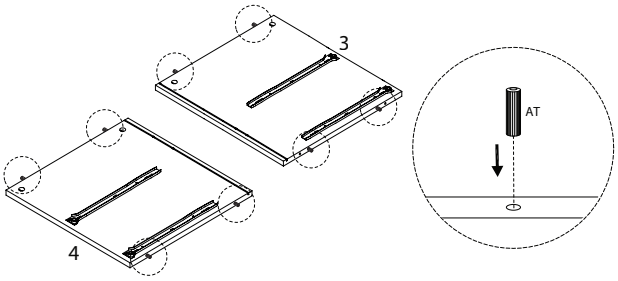

12

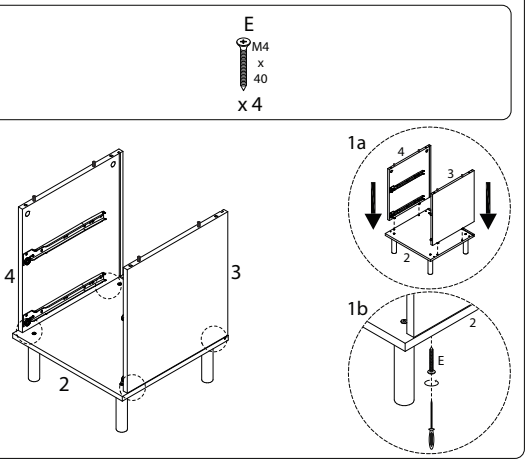

13

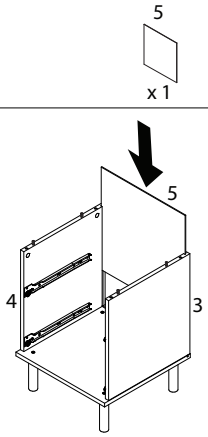

14

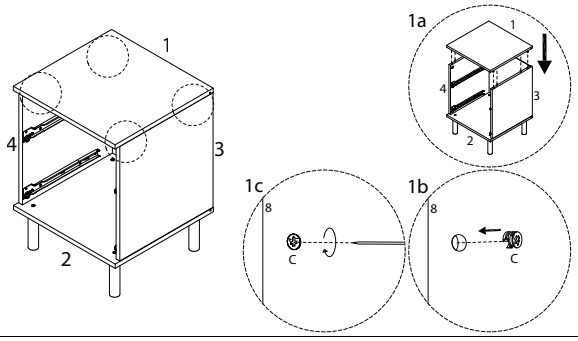

15

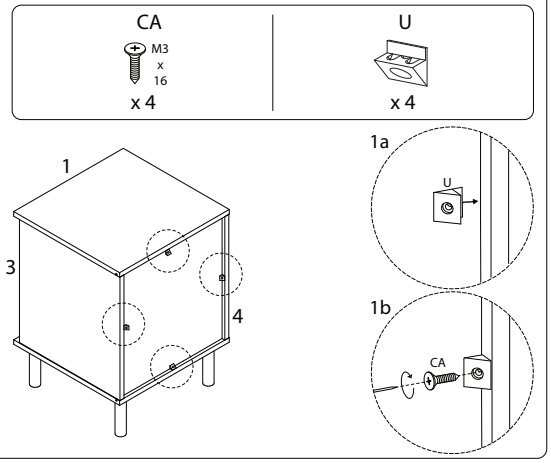
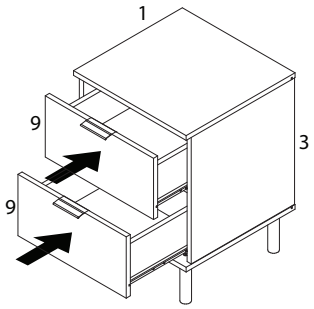
16