TIETE

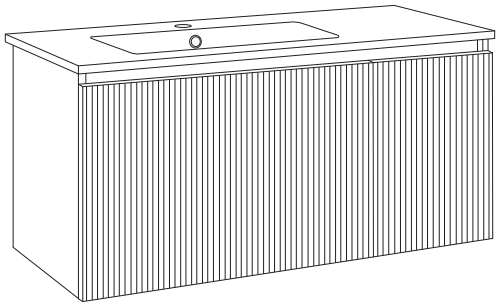

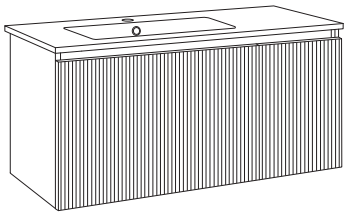

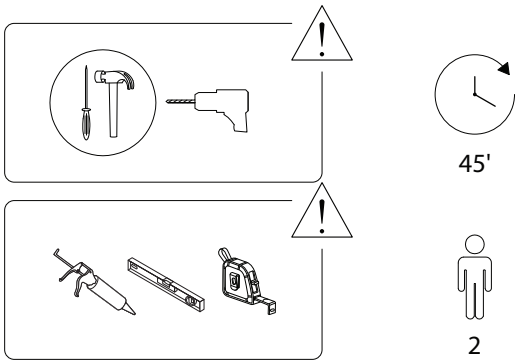

2353/TIERE/030925/

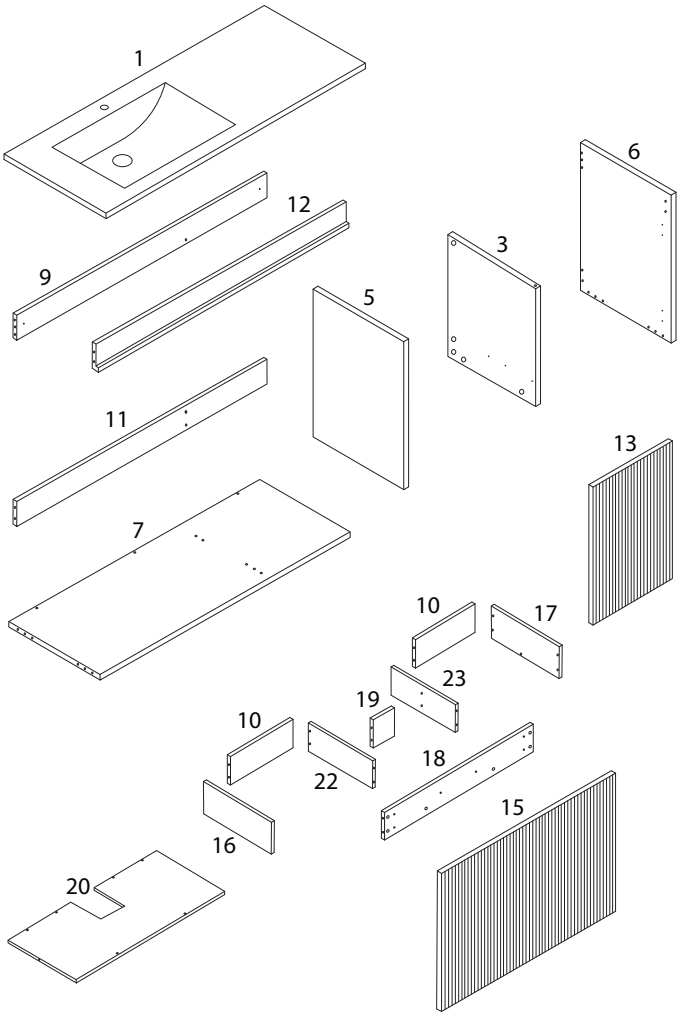

2353/TIERE/030925/

1 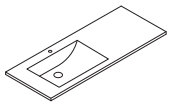 x 1	3  x 1	5 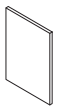 x 1
6 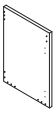 x 1	7 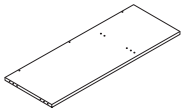 x 1	9 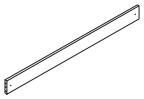 x 1
10  x 2	11 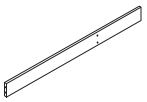 x 1	12 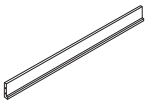 x 1
13  x 1	15 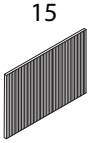 x 1	16  x 1
17  x 1	18 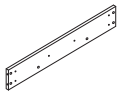 x 1	19  x 1
20 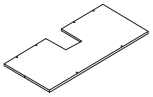 x 1	22  x 1	23  x 1

2353/TIERE/030925/

N1	N2	N4
x 53	x 53	x 16
N6	**N7L**	**N7R**
x 2	x 1	x 1
N10	**N11**	**N12**
M4 x 14 x 36	M4 x 25 x 4	M6 x 25 x 2
N13A	**N13B**	**N13C**
x 2	M6 x 70 x 2	x 2

1

3	5	6	7	9	11	N1
x 1	x 1	x 1	x 1	x 1	x 1	x 25

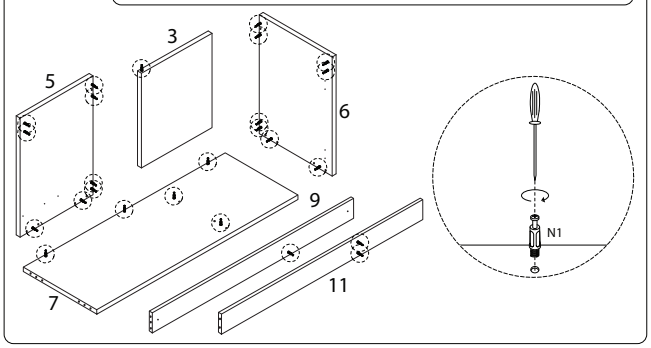

2

N4
x 14

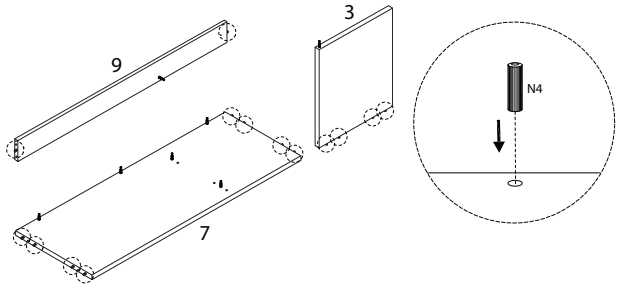

3

12	N2
x 1	x 4

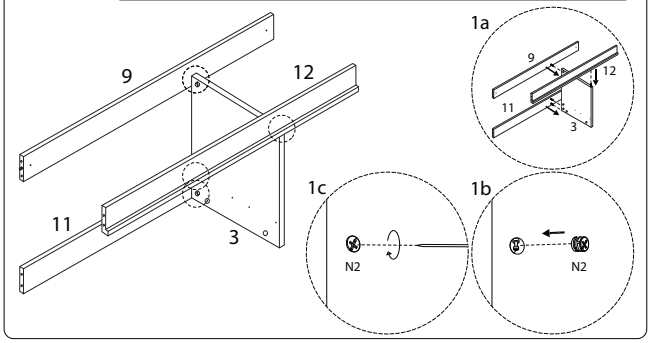

4

N2
x 5

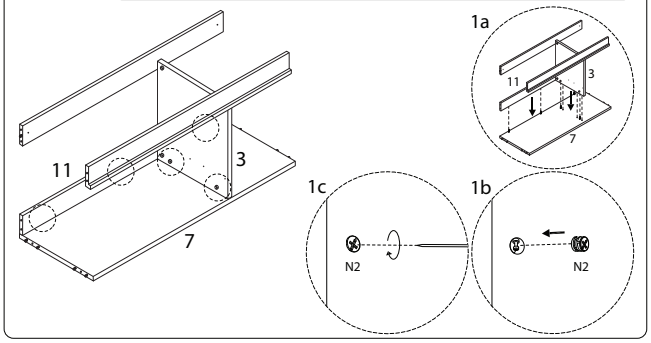

5

N2
x 16

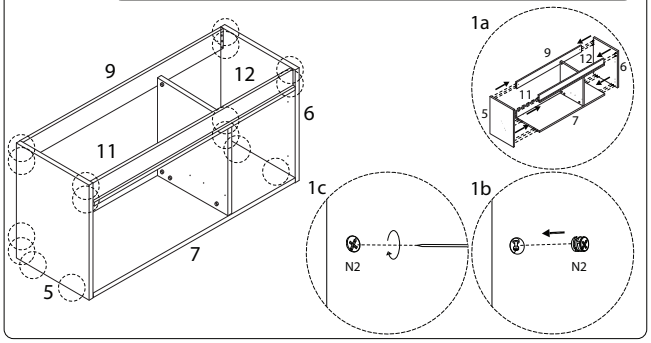

6

N7R	N10
x 1	M4 x 14 x 3

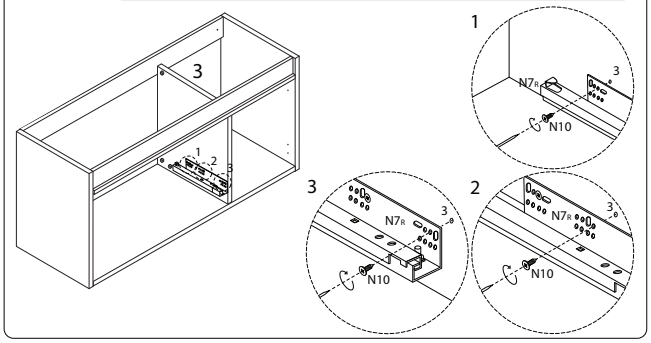

7

N7L	N10
x 1	x 3

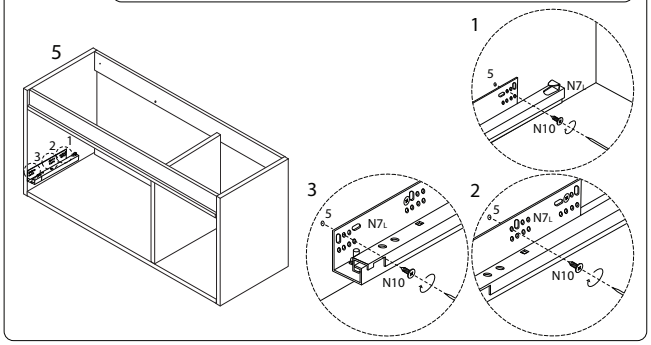

8

16	17	18	20	22	23	N1
x 1	x 1	x 1	x 1	x 1	x 1	x 28

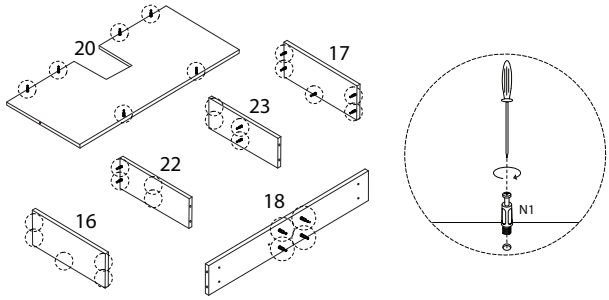

9

19	N2
x 1	x 4

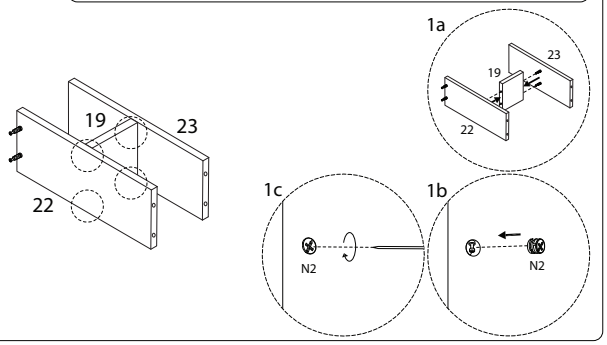

10

10	N2
x 2	x 8

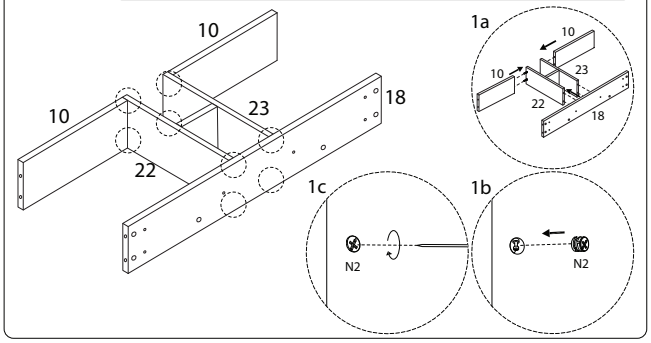

11

N2
x 6

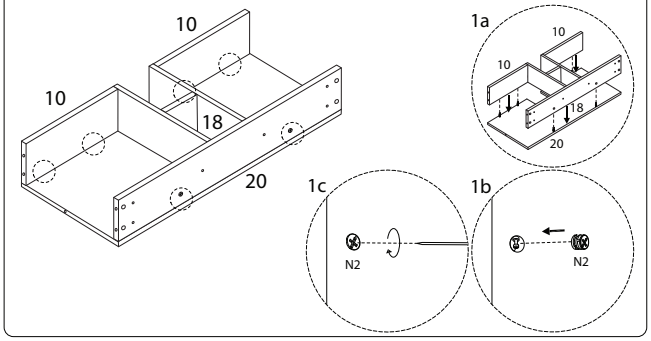

13

15	N12
x 1	x 2

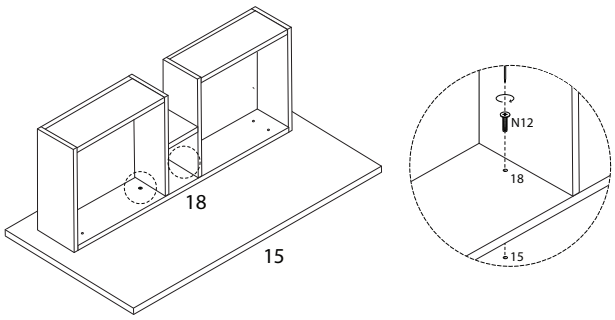

12

N2
x 10

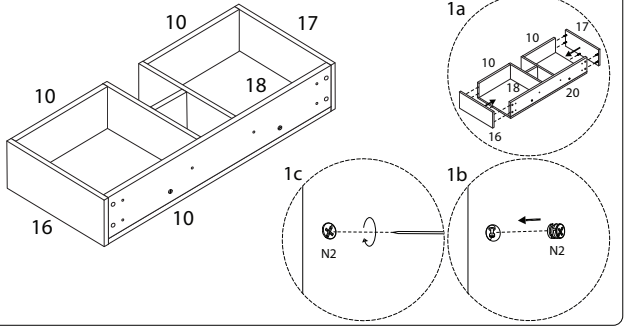

14

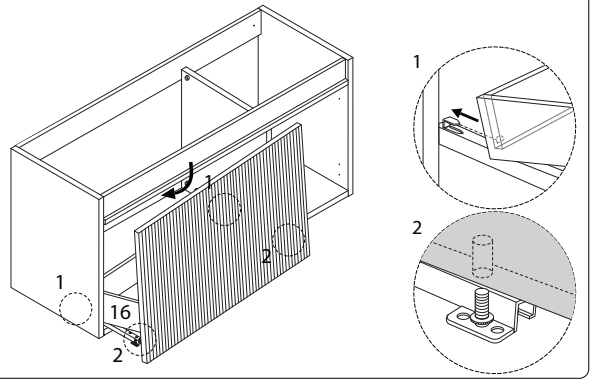

15

N10 M4 x 14 x2

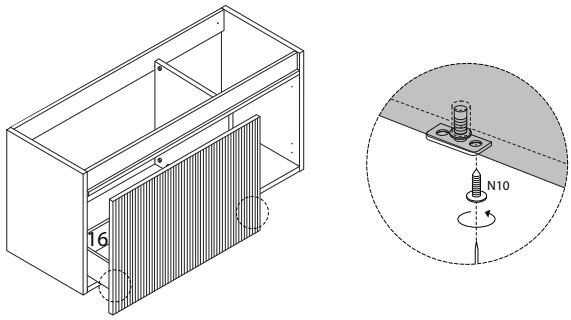

17

N10 M4 x 14 x 8

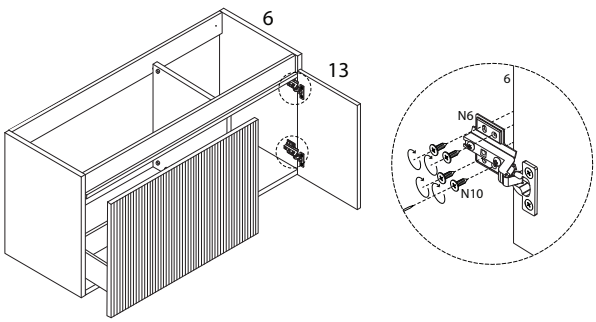

16

13 x 1 | N6 x 2 | N10 M4 x 14 x 4

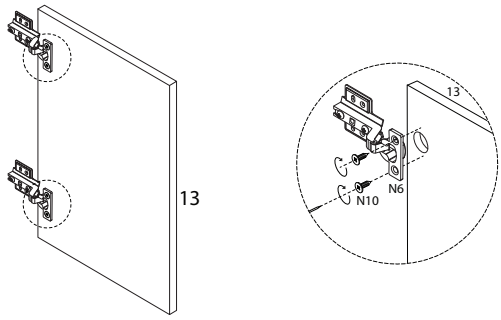

18

N11 M4 x 25 x 4

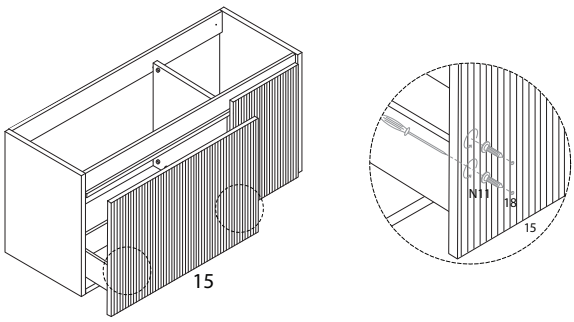

18

N10 M4 x 14 x 16 | N13A x 2

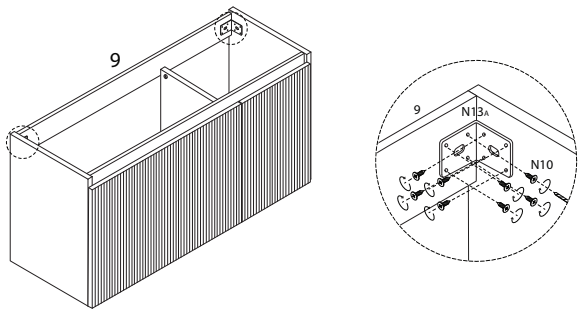

19

1 x 1

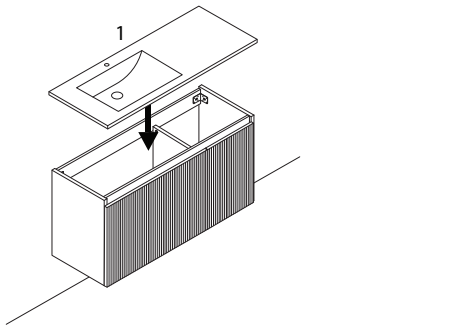

19

N13B M6 x 70 x 2 | N13C x 2

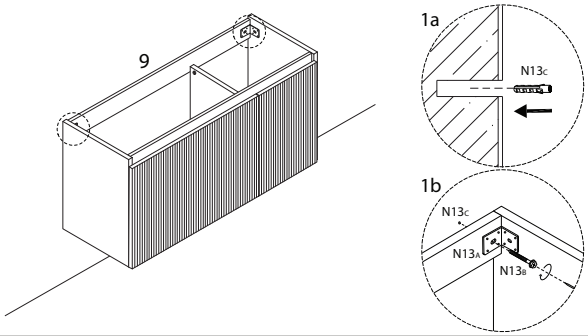

20

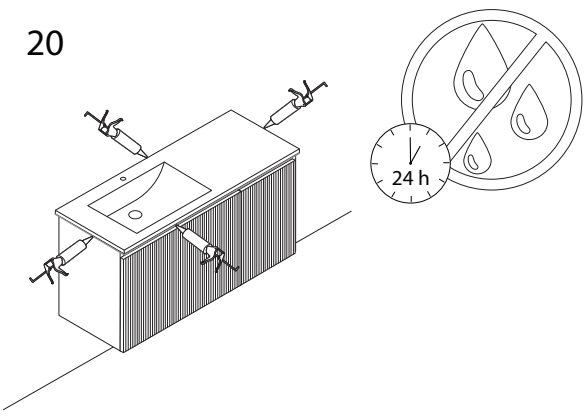

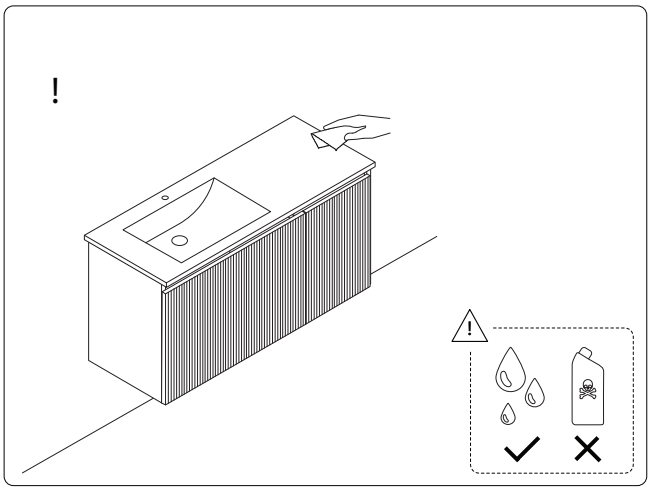

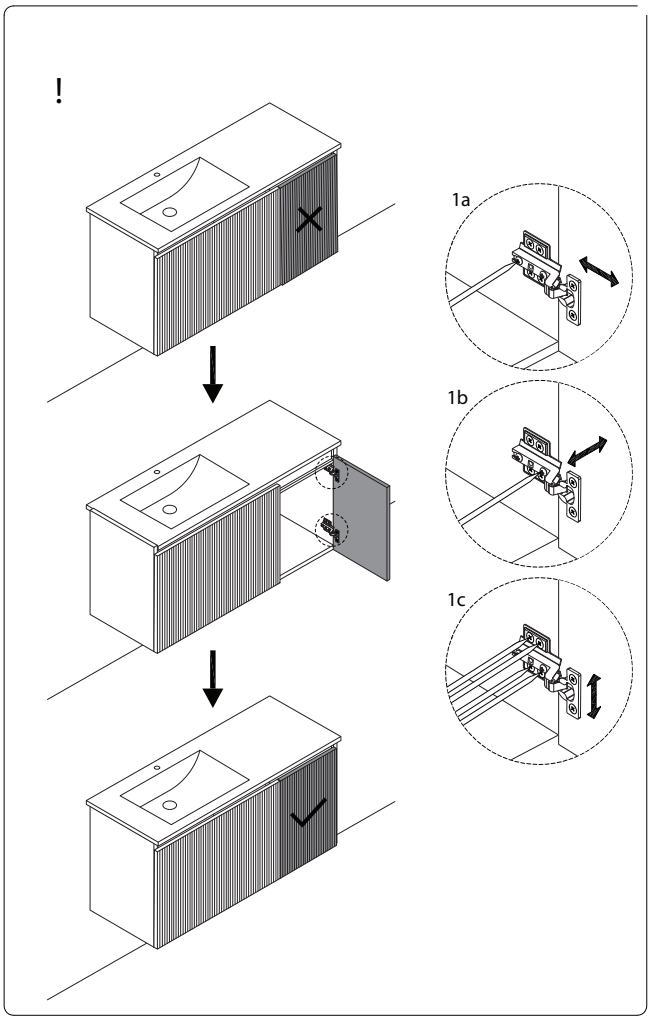
1a
1b
1c