

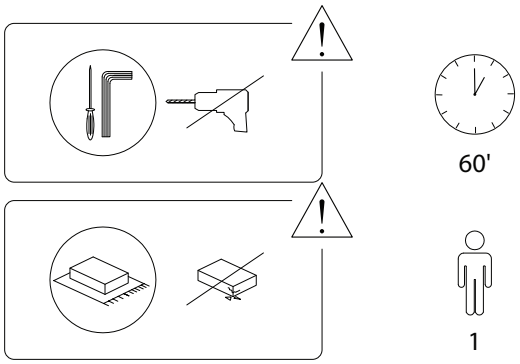

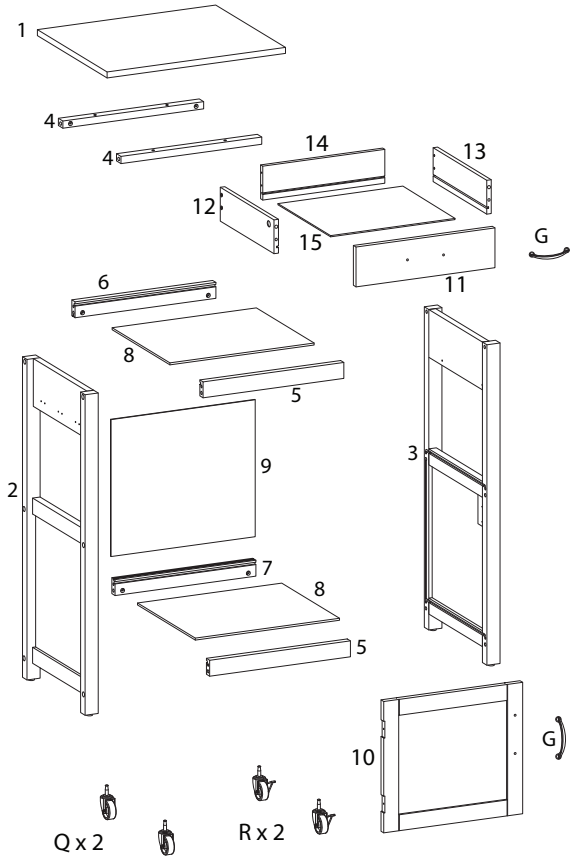

1  x 1	2 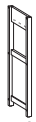 x 1	3  x 1
4  x 2	5  x 2	6  x 1
7  x 1	8  x 2	9 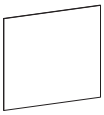 x 1
10 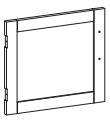 x 1	11 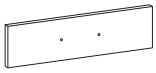 x 1	12 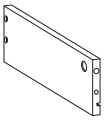 x 1
13 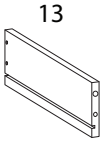 x 1	14  x 1	15  x 1

A  x 12	B  x 12	C  x 10	D  x 2
E  x 2	F  x 8	G  x 2	H  x 4
I  x 1	J  x 2	K  x 26	L  x 3
M 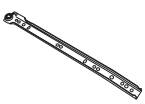 x 1	N  x 1	O 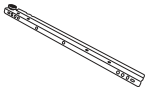 x 1	P 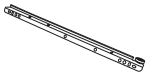 x 1
Q  x 2	R  x 2	S  x 1	

1

2	K	M
x 1	M3 x 14 x 2	x 1

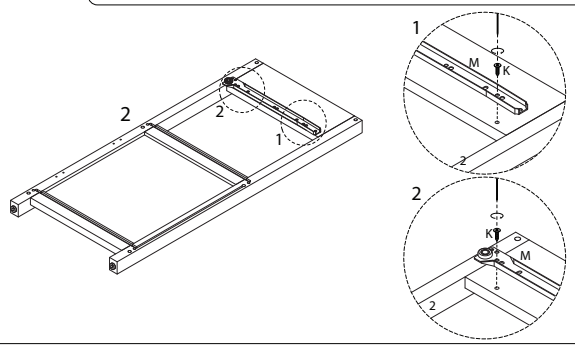

2

3	K	N
x 1	M3 x 14 x 2	x 1

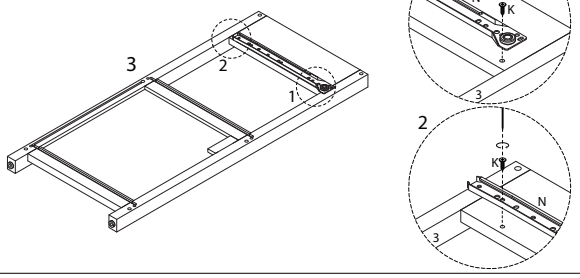

5/16

3

I	K
x 1	M3 x 14 x 2

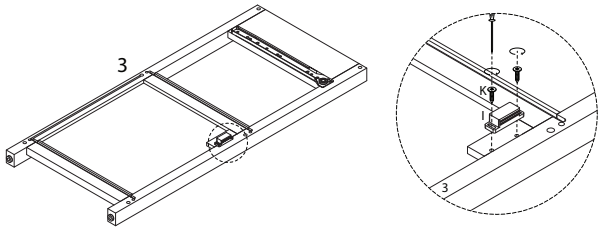

4

C
M6 x 30 x 4

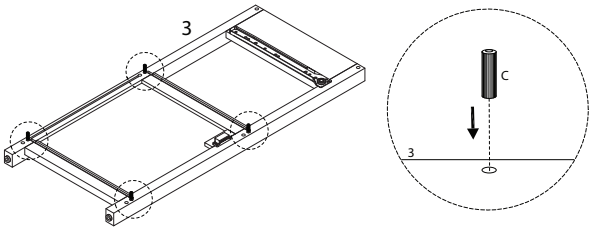

6/16

5

5	6	7	A	B	S
x 2	x 1	x 1	M6 x 50 x 4	x 4	x 1

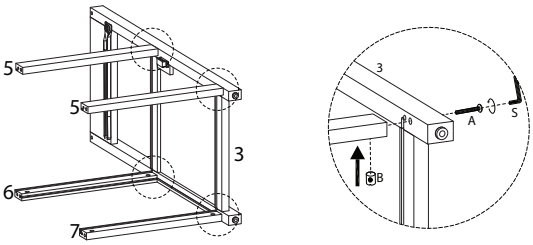

6

4	A	B	S
x 2	M6 x 50 x 2	x 2	x 1

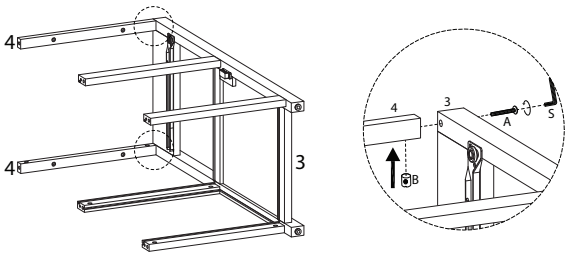

7/16

7

8	9
x 2	x 1

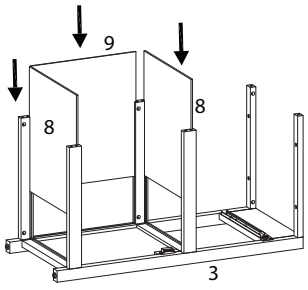

8

C
M6 x 30 x 4

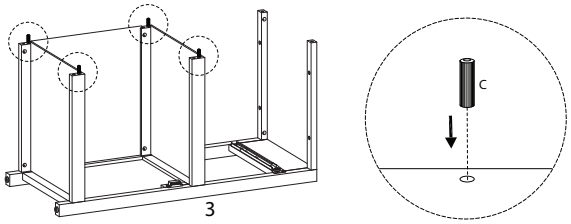

8/16

9

A	B	S
M6 x 50		
x 6	x 6	x 1

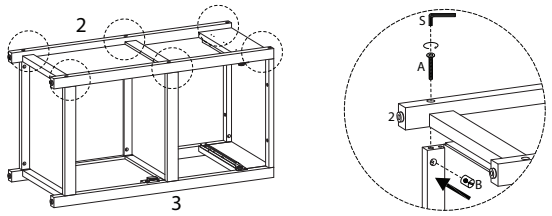

10

Q	R
x 2	x 2

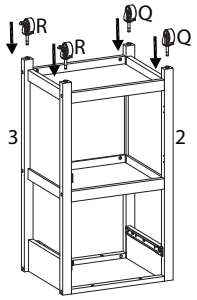

11

1	F
	M4 x 25
x 1	x 4

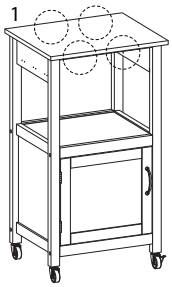

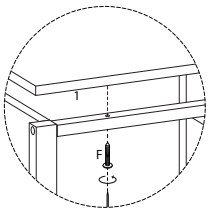

12

10	J	K
		M3 x 14
x 1	x 2	x 6

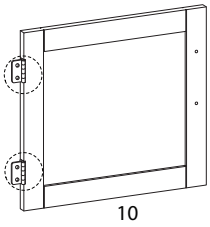

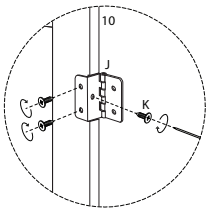

13

G	H
	M4 x 16
x 1	x 2

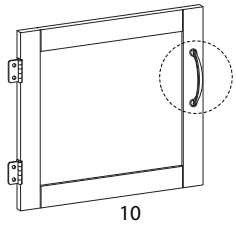

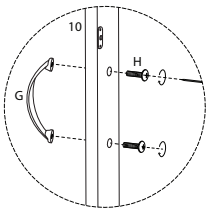

14

K
M3 x 14
x 4

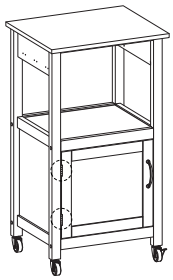

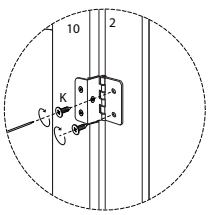

15

11	D
	M6 x 35
x 1	x 2

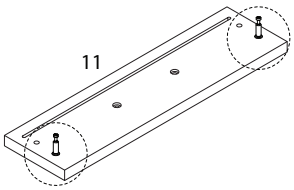

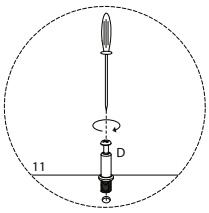

16

G	H
	M4 x 16
x 1	x 2

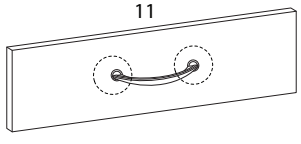

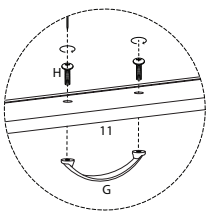

17

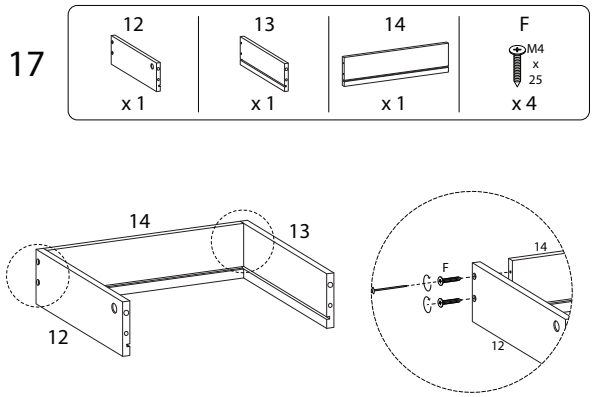

18

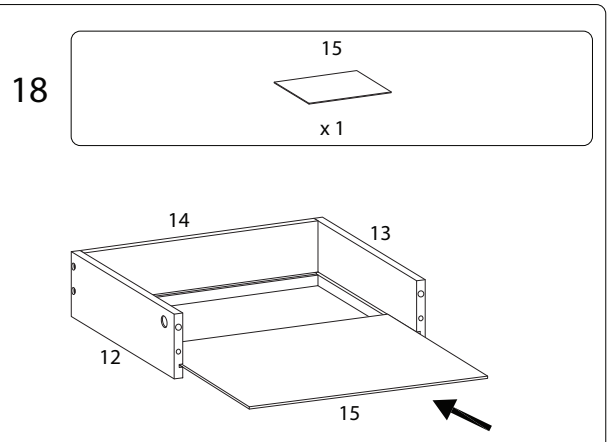

13/16

1807/SIENA/010222/

19

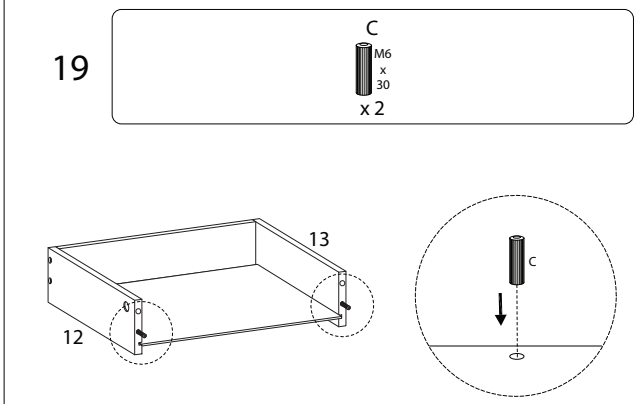

20

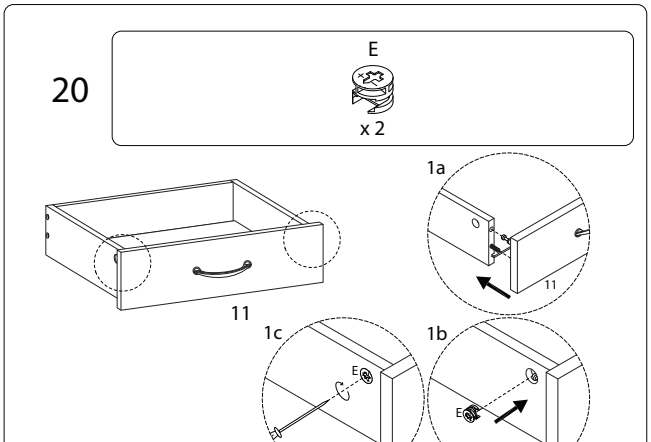

14/16

1807/SIENA/010222/

21

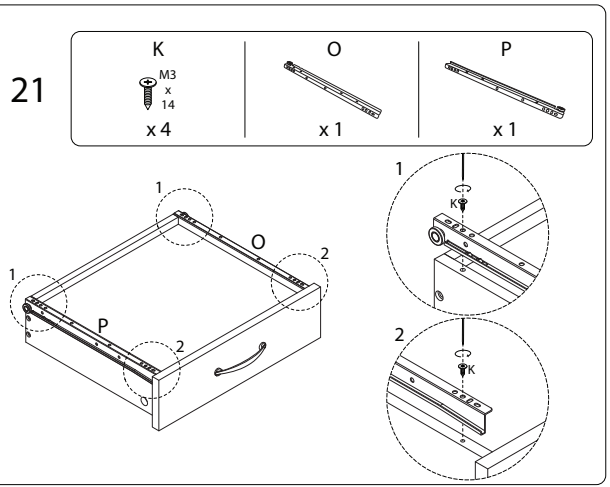

22



15/16

1807/SIENA/010222/

23

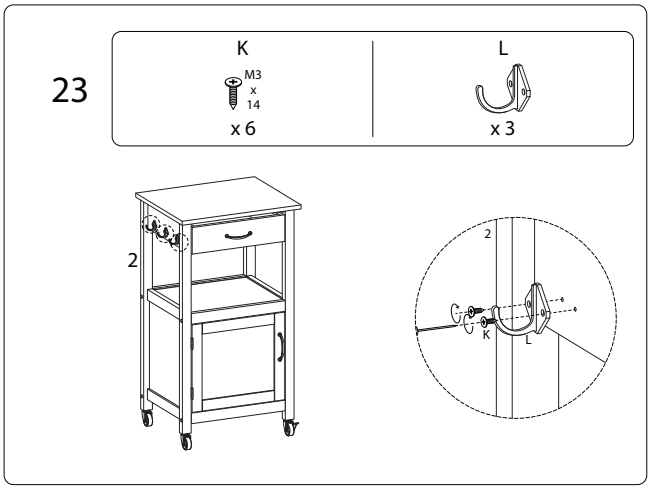

16/16

1807/SIENA/010222/