DAPHNE

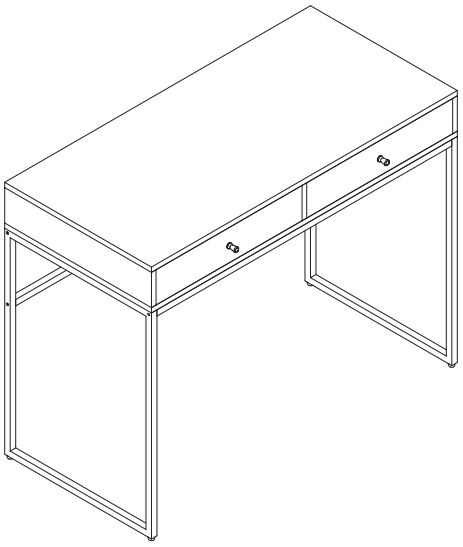

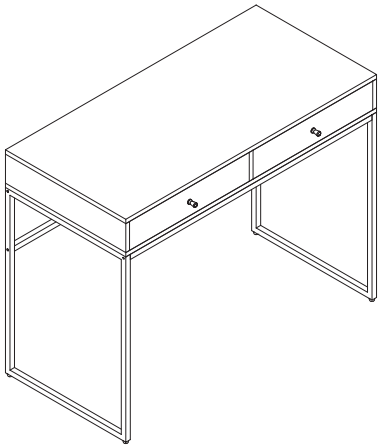

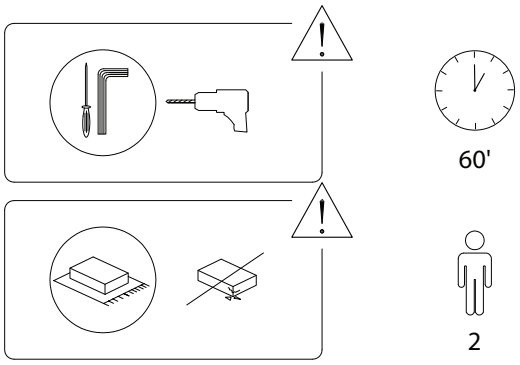

1/16

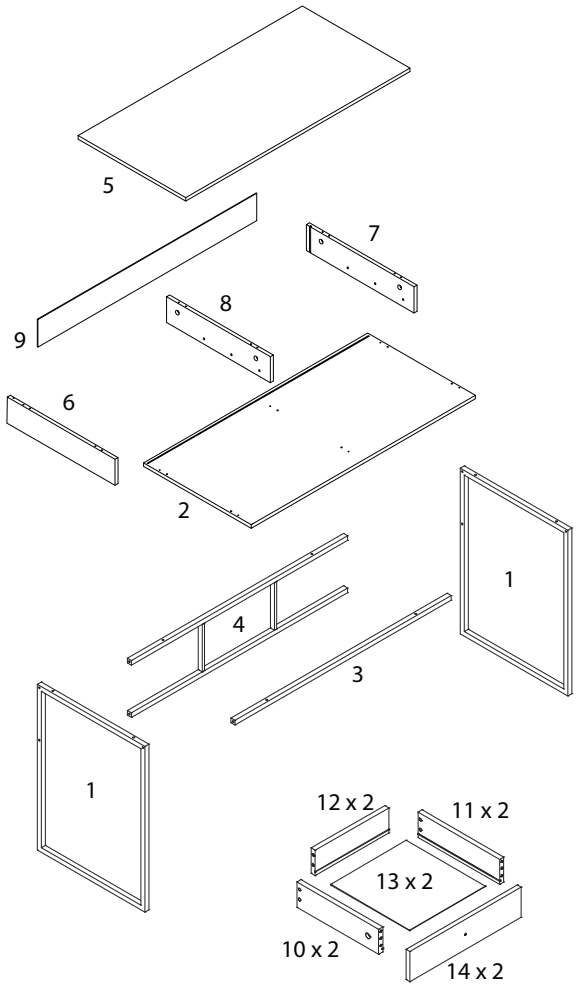

1 x 2	2 x 1	3 x 1
4 x 1	5 x 1	6 x 1
7 x 1	8 x 1	9 x 1
10 x 2	11 x 2	12 x 2
13 x 2	14 x 2	

2/16

3/16

A	B	C	D
 M6 x 30	 M6 x 40		 M4 x 20
x 8	x 6	x 2	x 2

E	F	G	H
			
x 1	x 4	x 10	x 10

I	J	K
 M3 x 12	 M6 x 30	 M4 x 35
x 24	x 20	x 14

CL	CR	DL	DR
	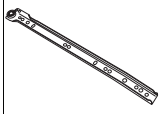	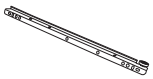	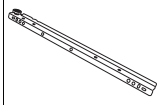
x 2	x 2	x 2	x 2

1

6	7	8	I	CL	CR
x 1	x 1	x 1	M3 x 12 x 9	x 1	x 2

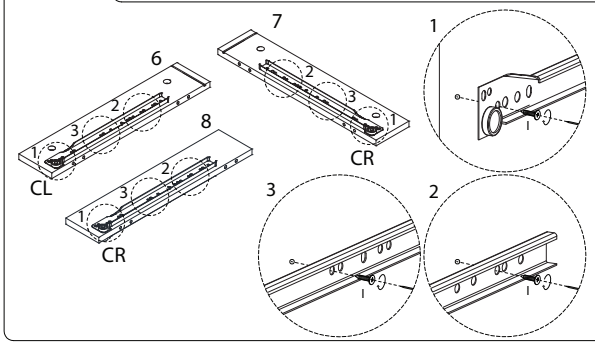

2

I	CL
M3 x 12 x 3	x 1

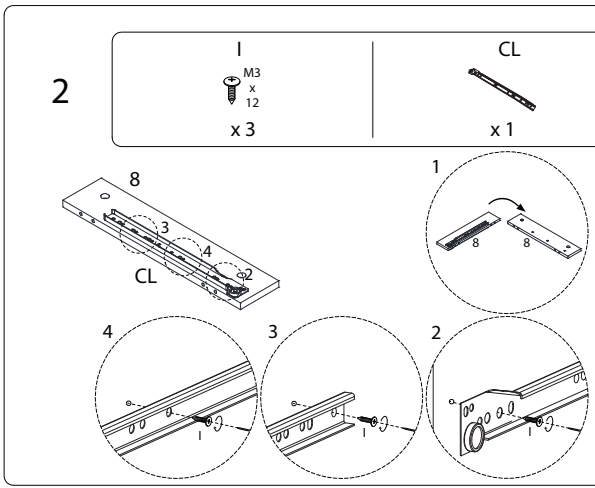

3

5	J
x 1	x 6

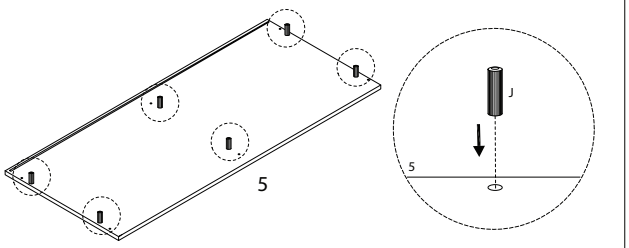

5

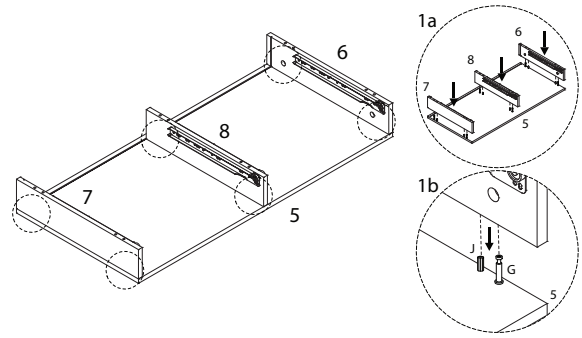

4

G
x 6

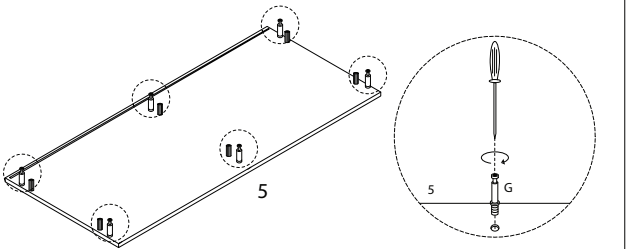

6

H
x 6

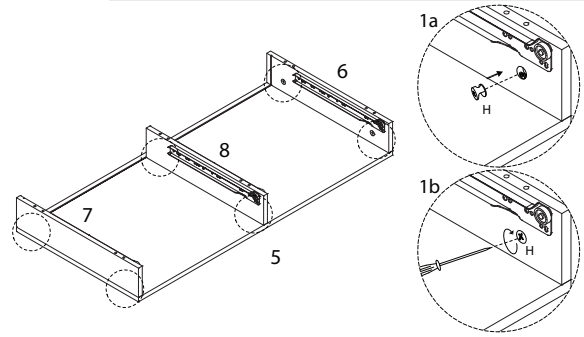

7

J
x 6

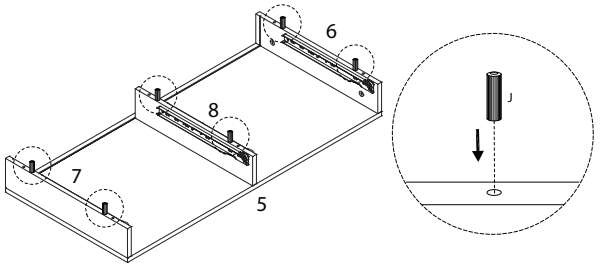

8

9
x 1

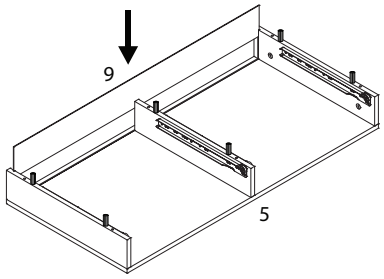

8/16

9

2
x 1

K
M4 x 35
x 6

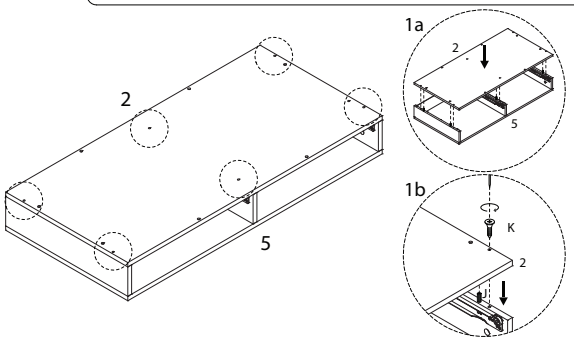

10

3
x 1

4
x 1

A
M6 x 30
x 4

E
x 1

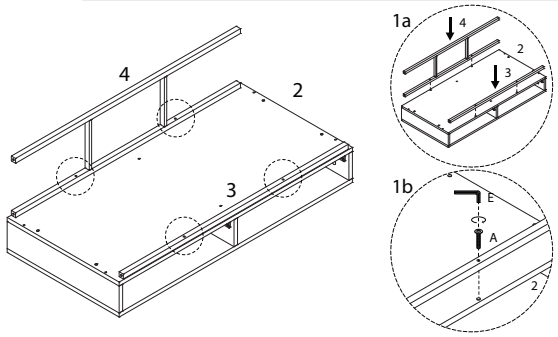

9/16

11

1
x 2

A
M6 x 30
x 4

E
x 1

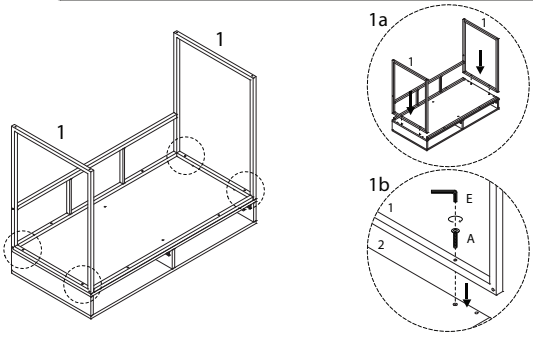

12

F
x 4

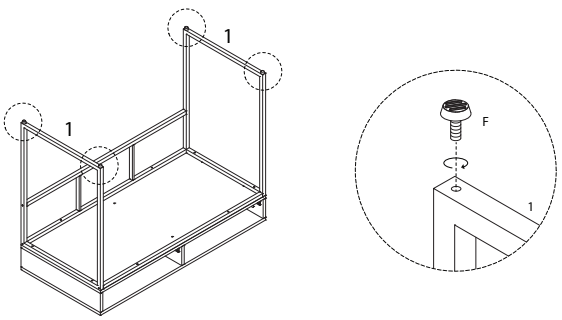

10/16

13

B
M6 x 40
x 6

E
x 1

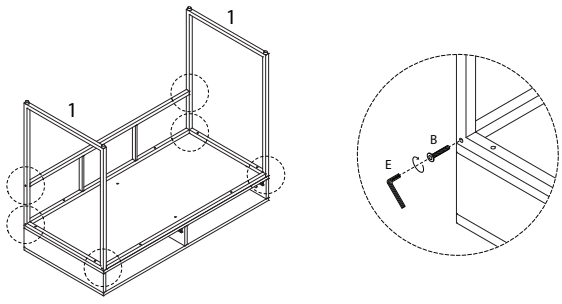

14 x 2

14
x 1

G
x 2

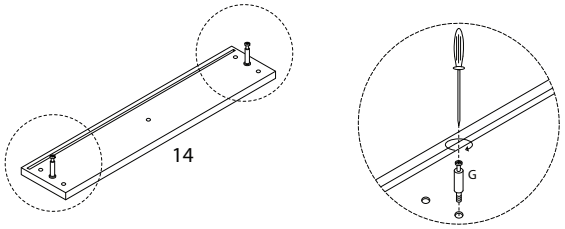

11/16

15 x 2

J

M6 x 30

x 4

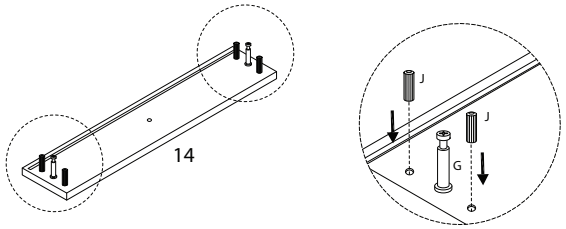

17 x 2

H

x 2

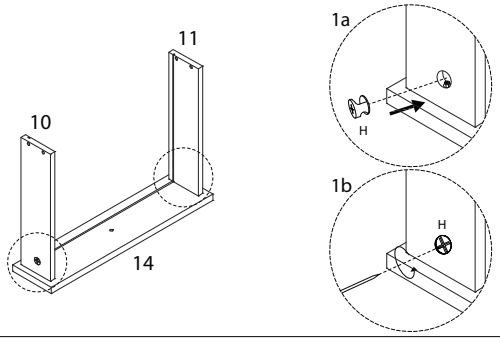

16 x 2

10

x 1

11

x 1

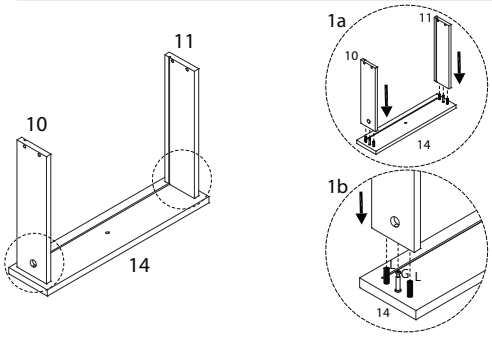

18 x 2

13

x 1

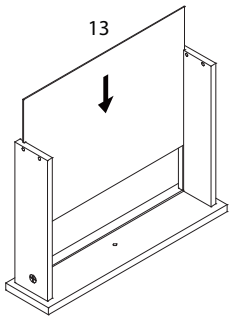

19 x 2

12

x 1

K

M4 x 35

x 4

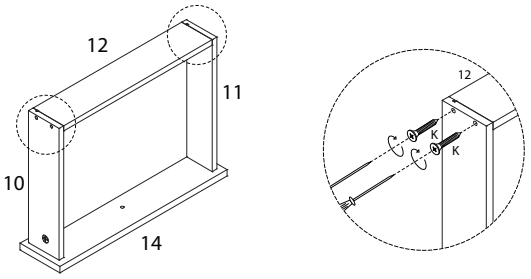

21 x 2

C

x 1

D

M4 x 20

x 1

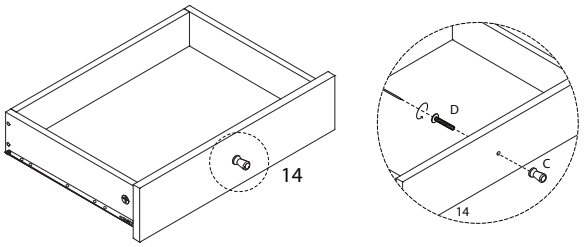

20 x 2

I

M3 x 12

x 6

DL

x 1

DR

x 1

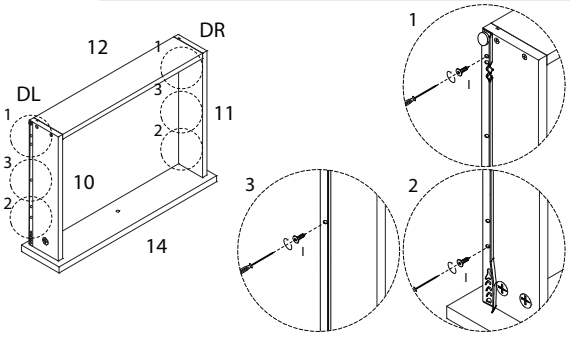

22

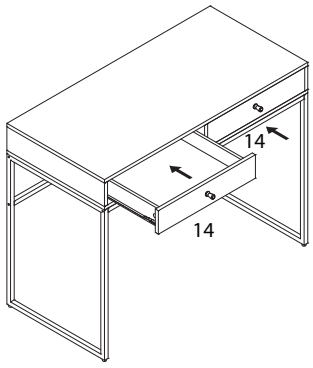

23

