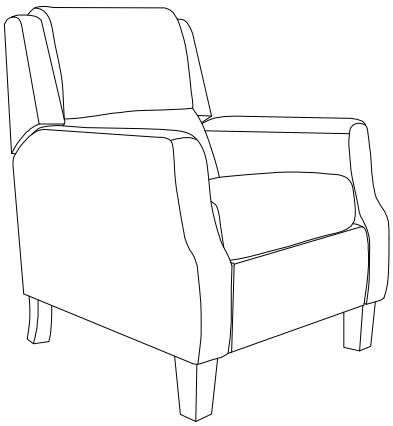

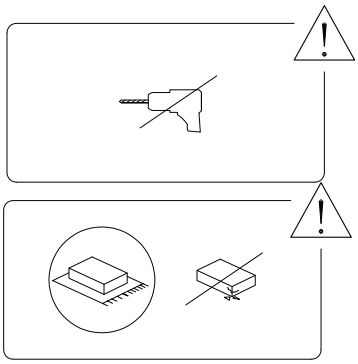





1117/EGERSUND/280121/

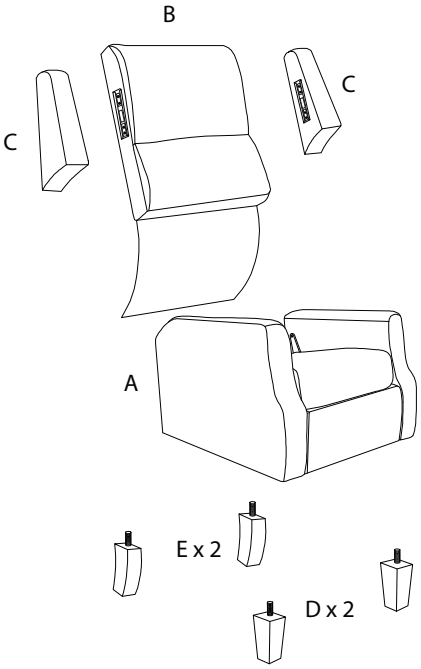

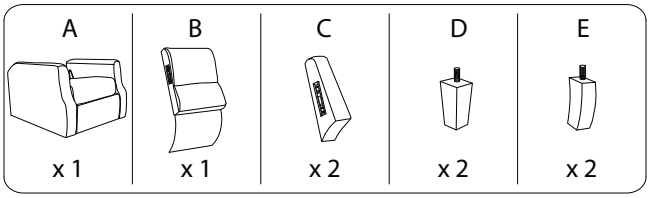

1117/EGERSUND/280121/

1

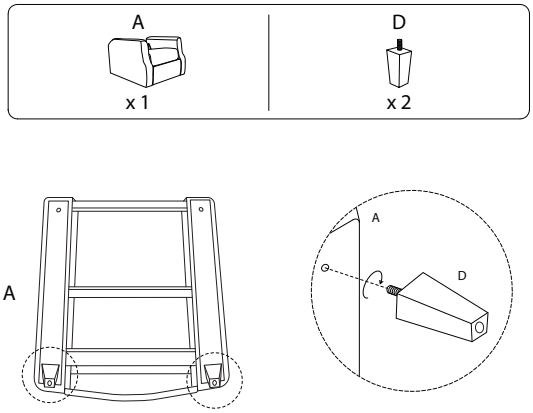

3

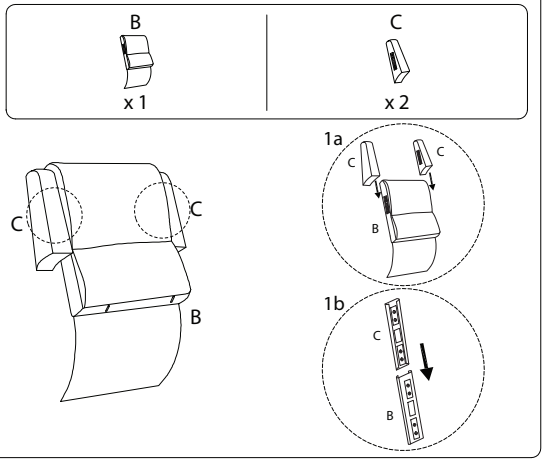

2

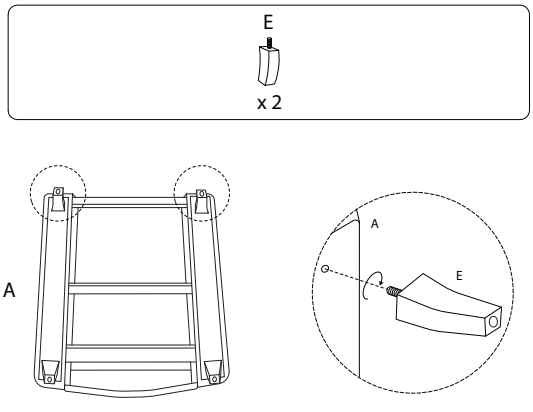

4

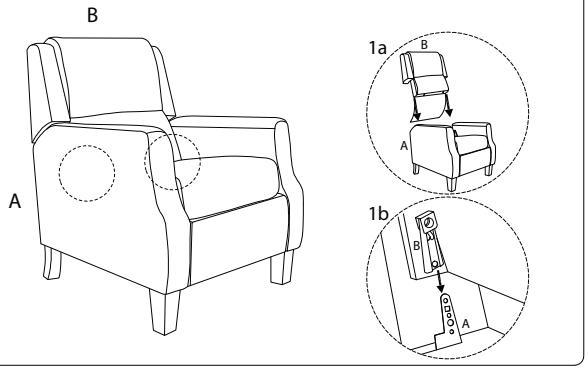

1117/EGERSUND/280121/

1117/EGERSUND/280121/

5

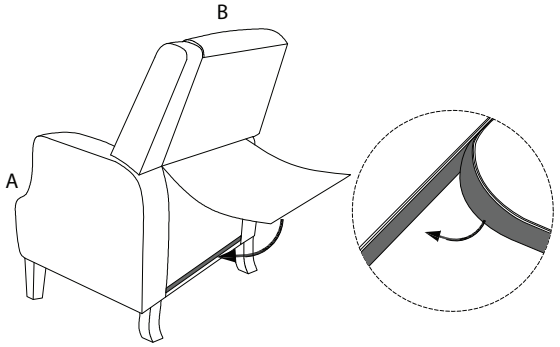

!

