# UTAH

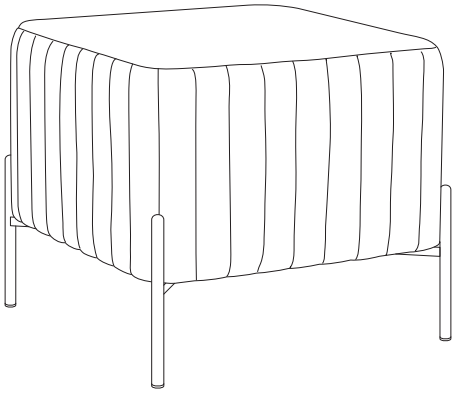

1/4

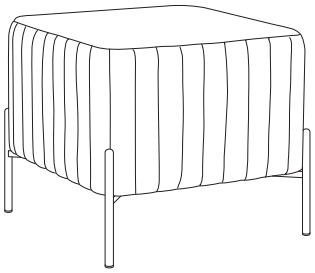

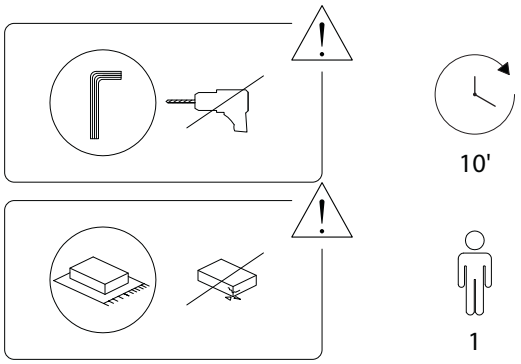


2/4



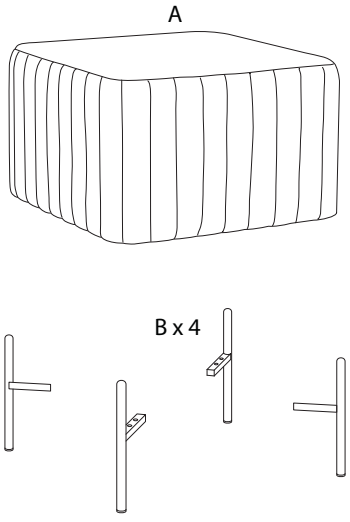


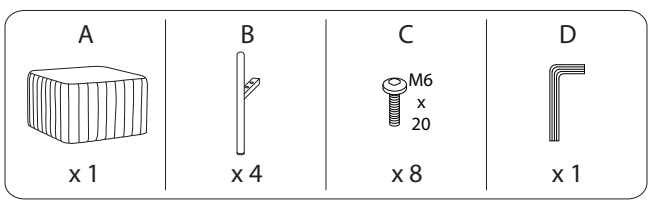


3/4



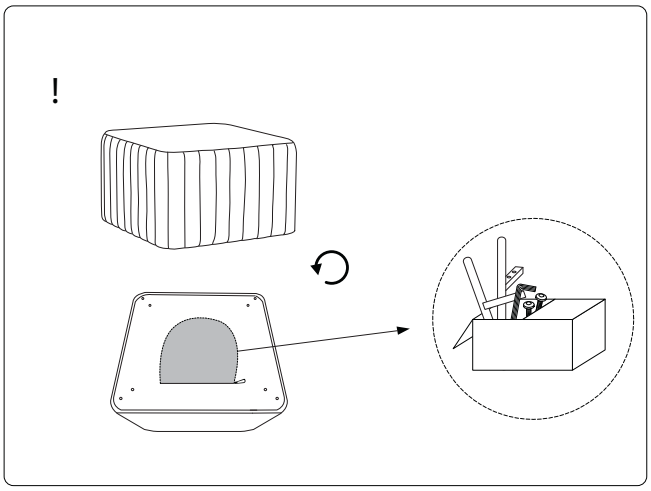


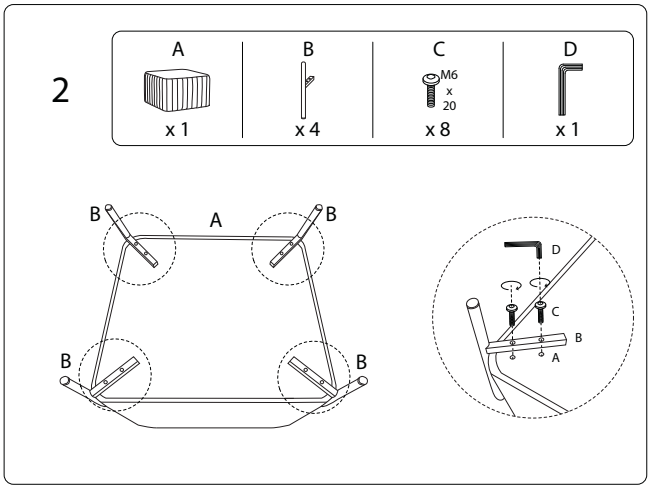


4/4