ROYVILLE

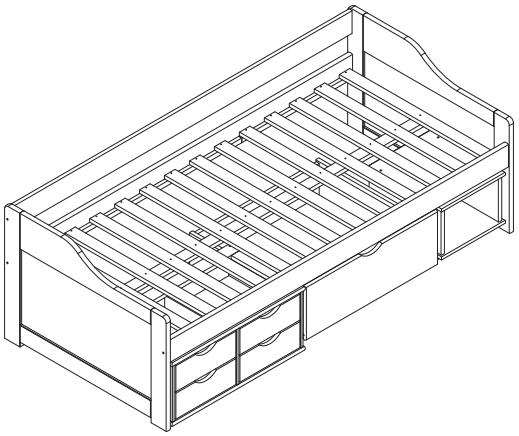

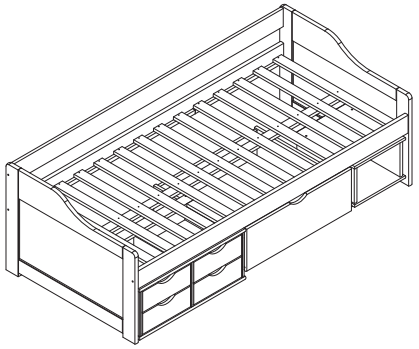

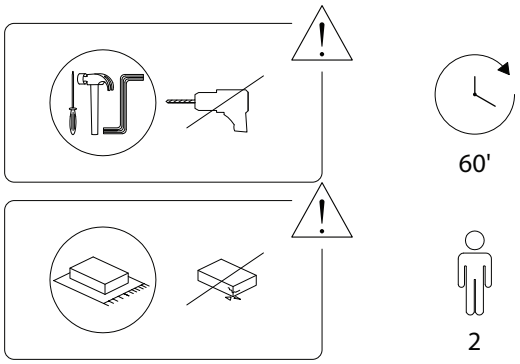

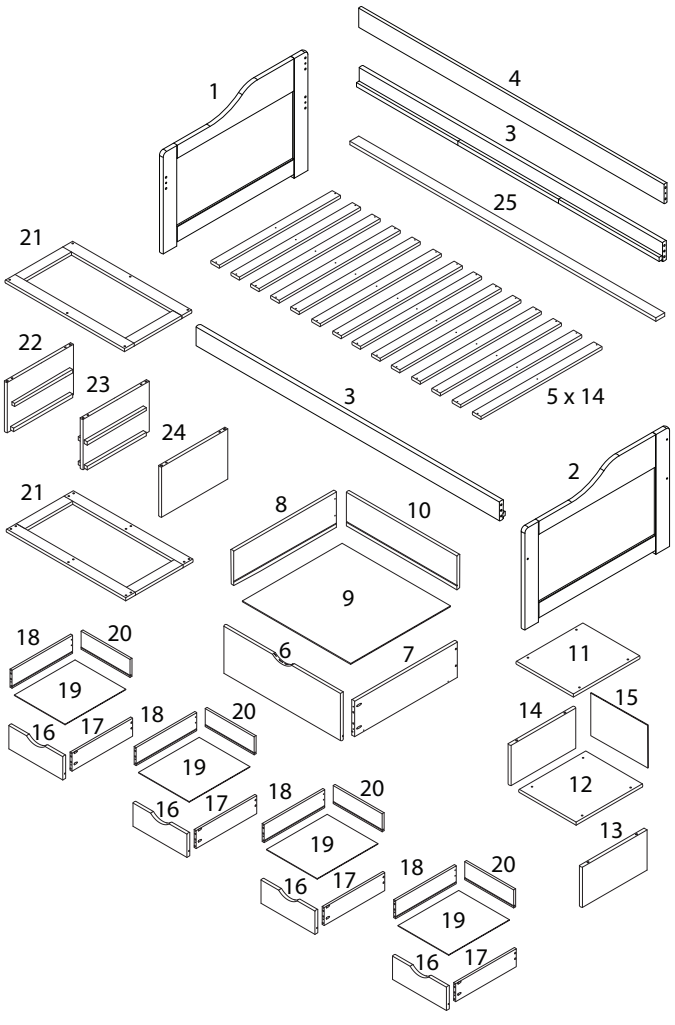

1 x 1	2 x 1	3 x 2	4 x 1
5 x 14	6 x 1	7 x 1	8 x 1
9 x 1	10 x 1	11 x 1	12 x 1
13 x 1	14 x 1	15 x 1	16 x 4
17 x 4	18 x 4	19 x 4	20 x 4

21	22	23
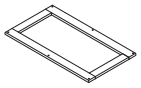	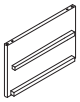	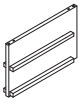
x 2	x 1	x 1

24	25
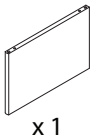	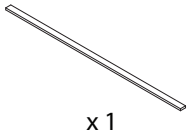
x 1	x 1

A	B	C	D
 M10	 M8	 M4 x 30	 M3,5 x 16
x 12	x 32	x 68	x 16

E	F	G	H
 M7 x 50	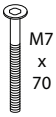 M7 x 70		
x 20	x 6	x 1	x 12

I	J	K	L
		 M3,5 x 35	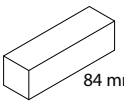 84 mm
x 8	x 6	x 14	x 2

1

3	4	A
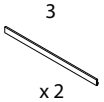	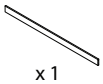	 M10
x 2	x 1	x 12

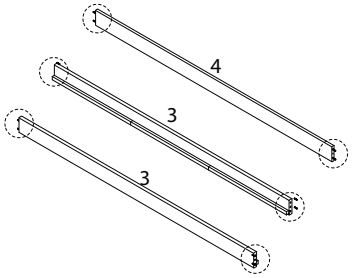

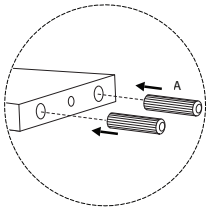

2

1	2	F	G
		 M7 x 70	
x 1	x 1	x 6	x 1

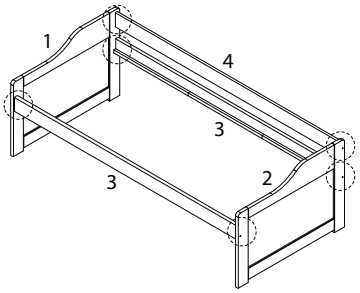

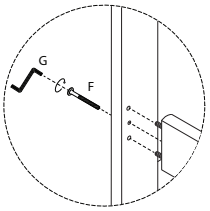

3

5	C
	 M4 x 30
x 2	x 4

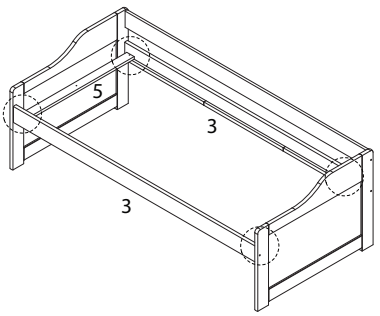

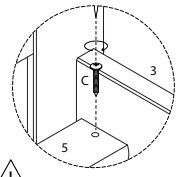

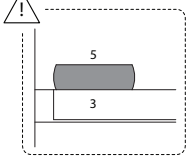

5

5	C	L
	 M4 x 30	 84 mm
x 12	x 24	x 2

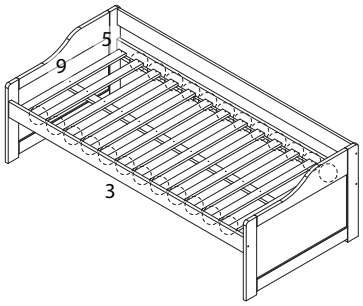

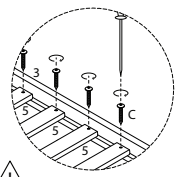

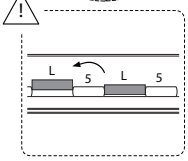

4

25	K
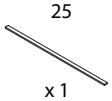	M3,5 x 35
x 1	x 2

6

K
M3,5 x 35
x 12

7

22	23	24	B
x 1	x 1	x 1	x 12

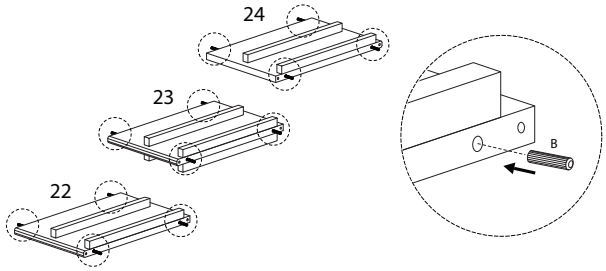

8

E	G	21
M7 x 70		
x 12	x 1	x 2

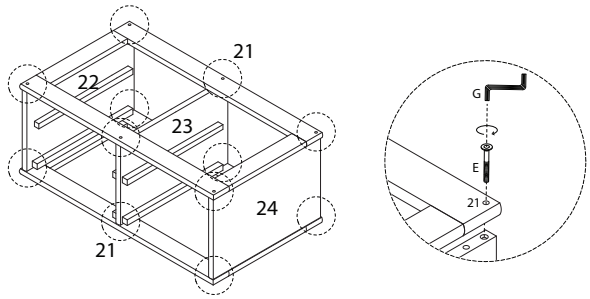

9

7	8	B
x 1	x 1	x 4

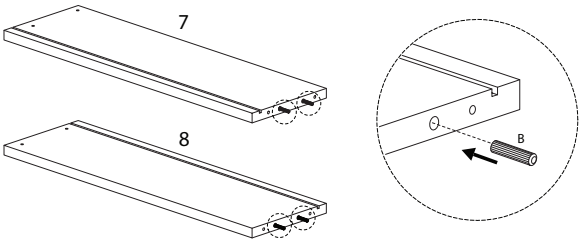

10

6	9	10	C
x 1	x 1	x 1	x 8

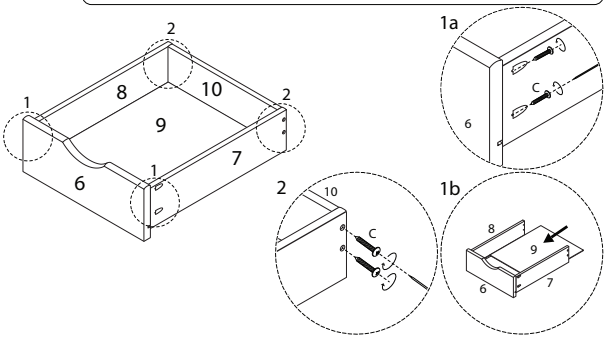

11

D	I
M3,5 x 16	
x 8	x 4

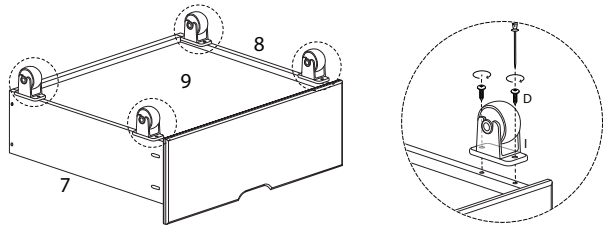

13 x 4

16	19	20	C
x 1	x 1	x 1	x 8

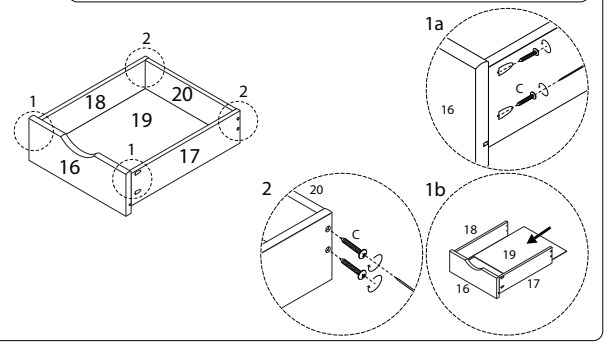

12 x 4

17	18	B
x 1	x 1	x 4

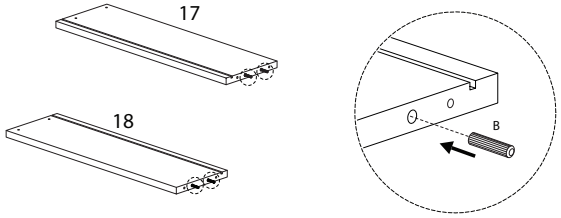

14

11	12	13	14	E	G
x 1	x 1	x 1	x 1	M7 x 50 x 8	x 1

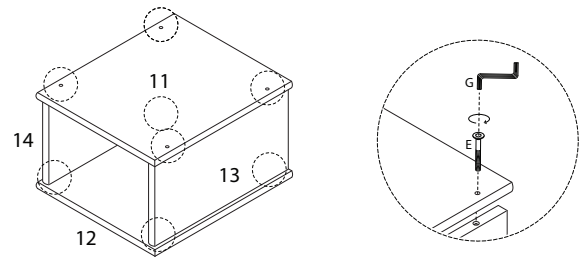

15

15 x 1 | H x 12

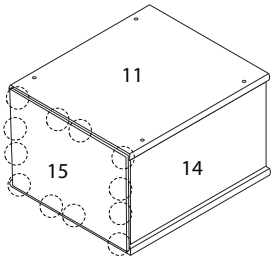

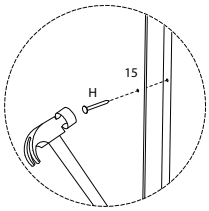

16

D M3,5 x 16 x 8 | I x 4

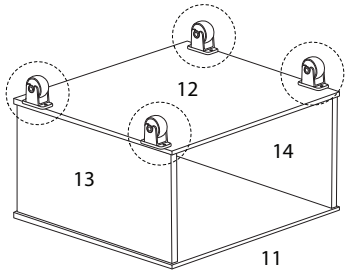

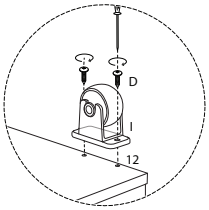

17

J x 6

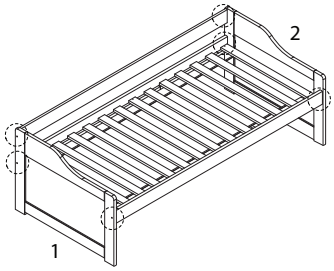

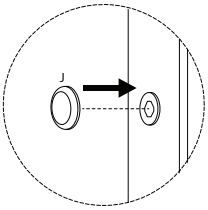

18

