ALABAMA

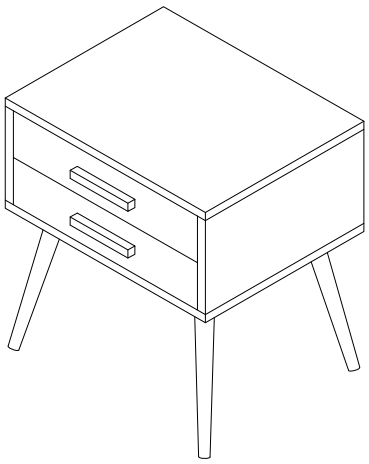

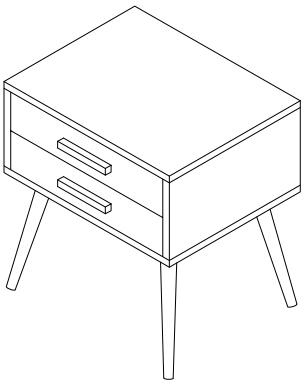

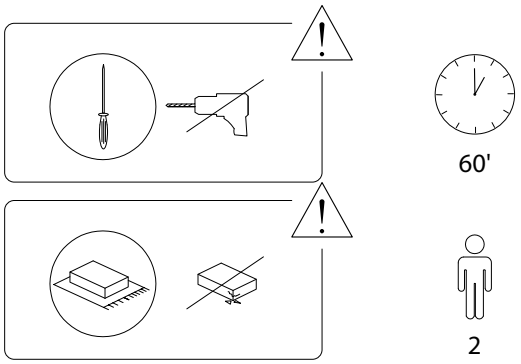
60'
2

1/10

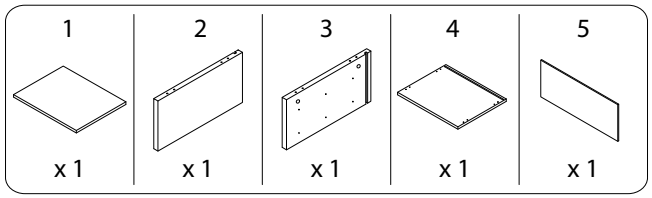
1
x 1
2
x 1
3
x 1
4
x 1
5
x 1

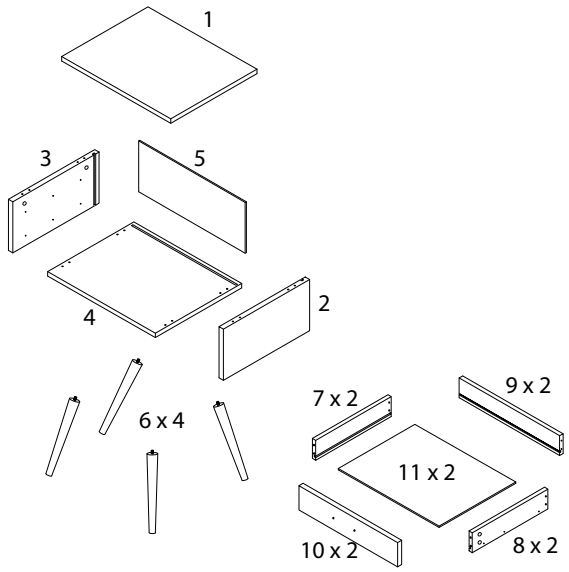
1
3
5
4
2
6 x 4
7 x 2
9 x 2
11 x 2
10 x 2
8 x 2

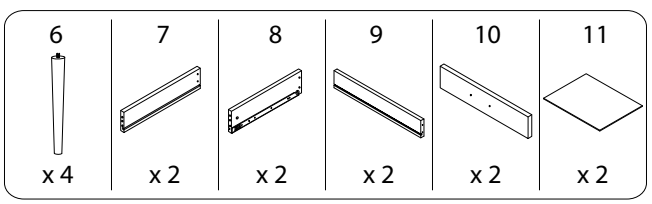
6
x 4
7
x 2
8
x 2
9
x 2
10
x 2
11
x 2

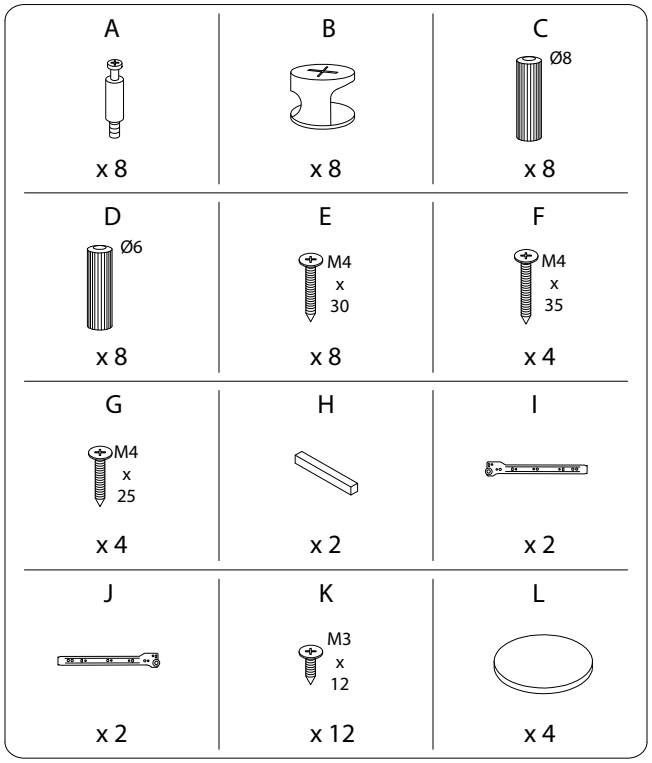
A
x 8
B
x 8
C
Ø8
x 8
D
Ø6
x 8
E
M4
x
30
x 8
F
M4
x
35
x 4
G
M4
x
25
x 4
H
x 2
I
x 2
J
x 2
K
M3
x
12
x 12
L
x 4

1

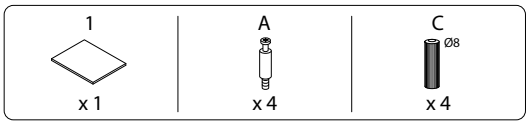

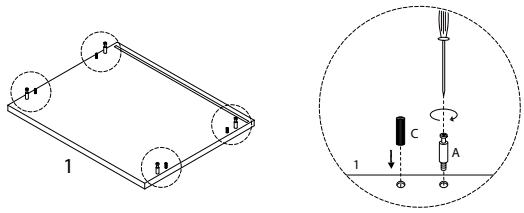

2

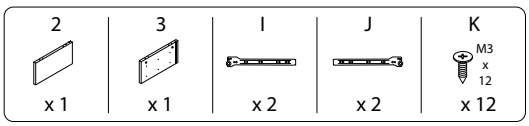

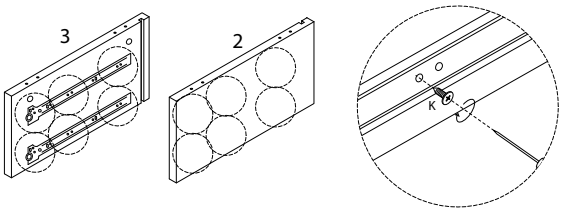

3 x 2

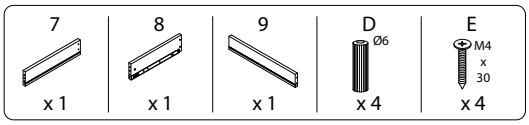

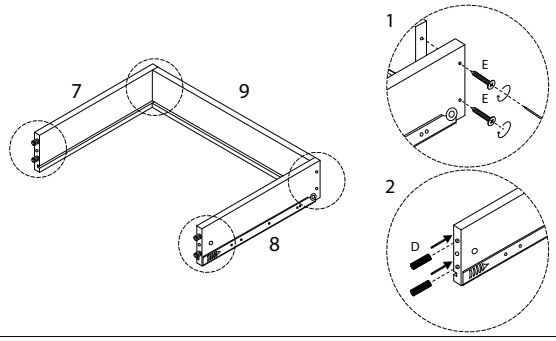

4 x 2

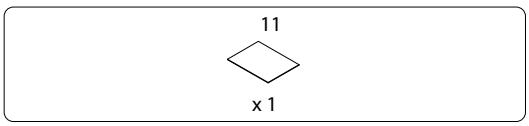

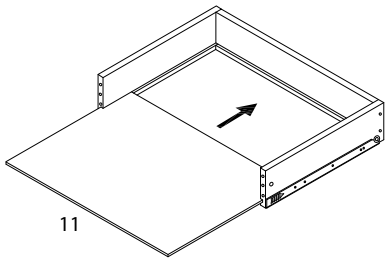

5 x 2

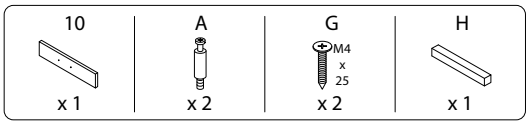

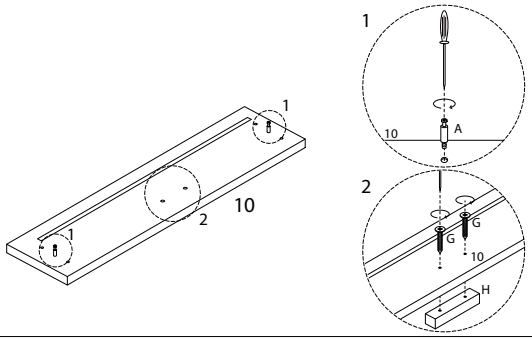

6 x 2

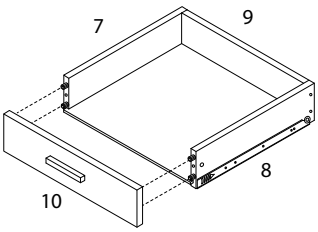

7 x 2

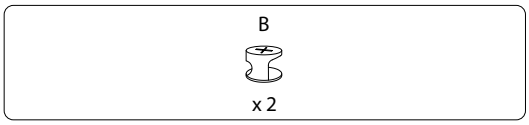

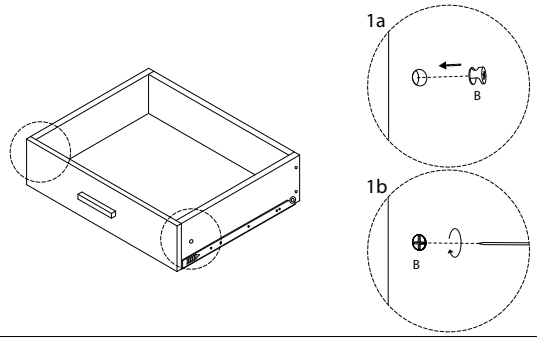

8

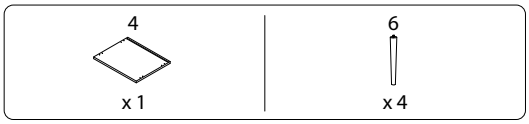

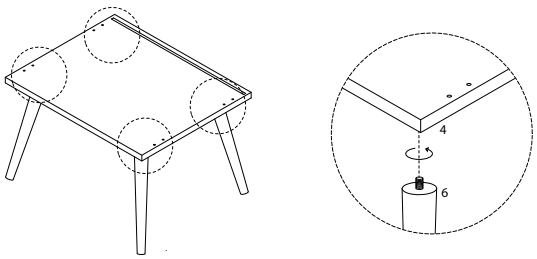

9

L

x 4

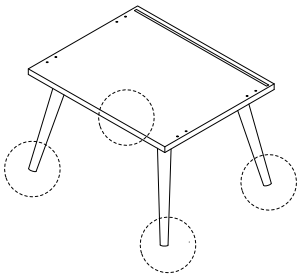

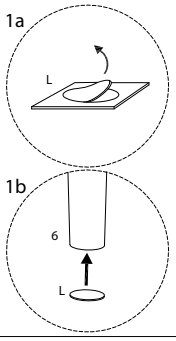

10

C

Ø8

x 4

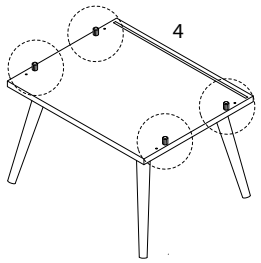

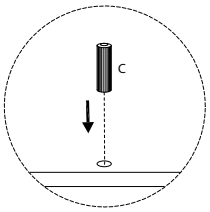

8/10

11

F

M4
x
35

x 4

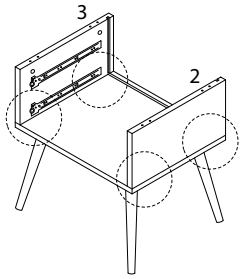

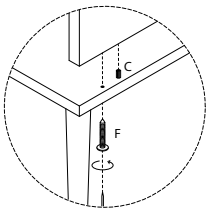

12

5

x 1

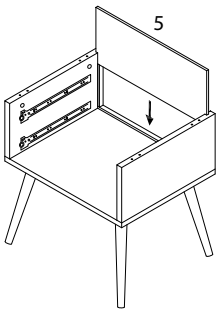

9/10

13

B

x 4

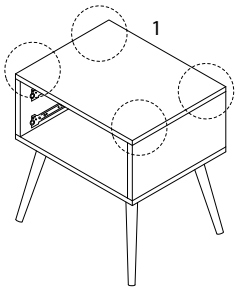

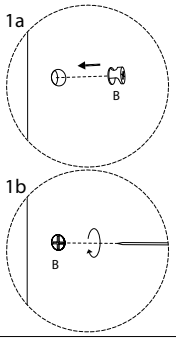

14

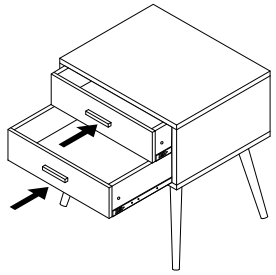

10/10