MONTCON

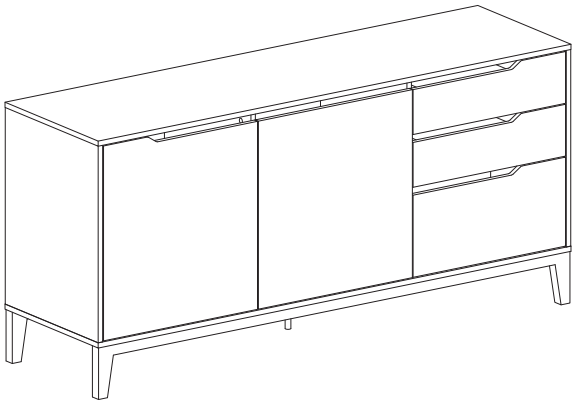

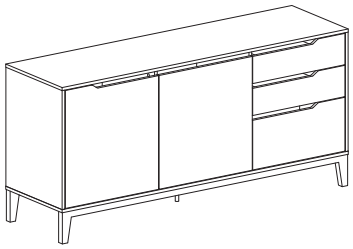

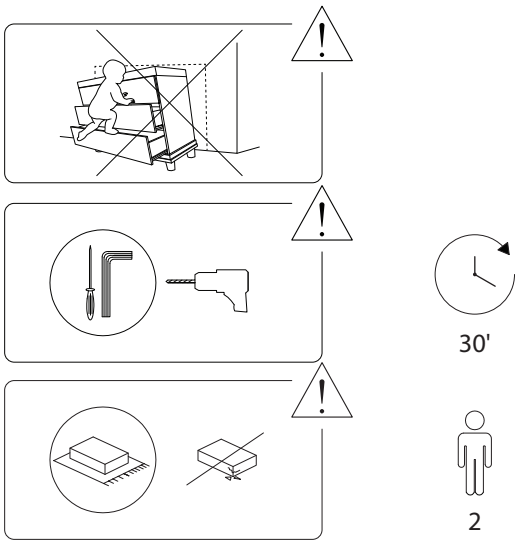

2667/MONTCON/140126/

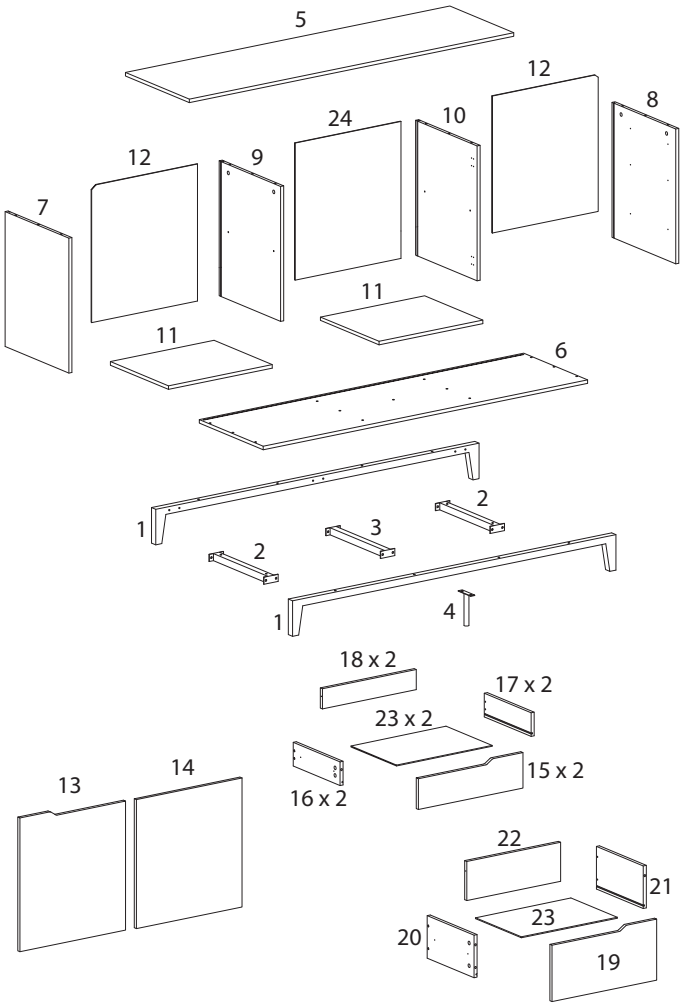

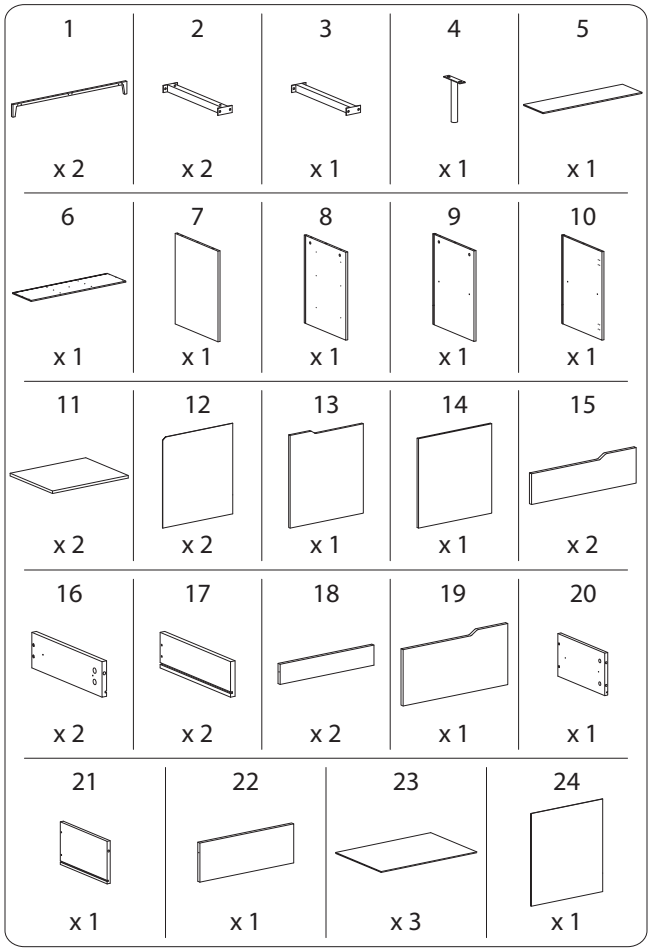

2667/MONTCON/140126/

2667/MONTCON/140126/

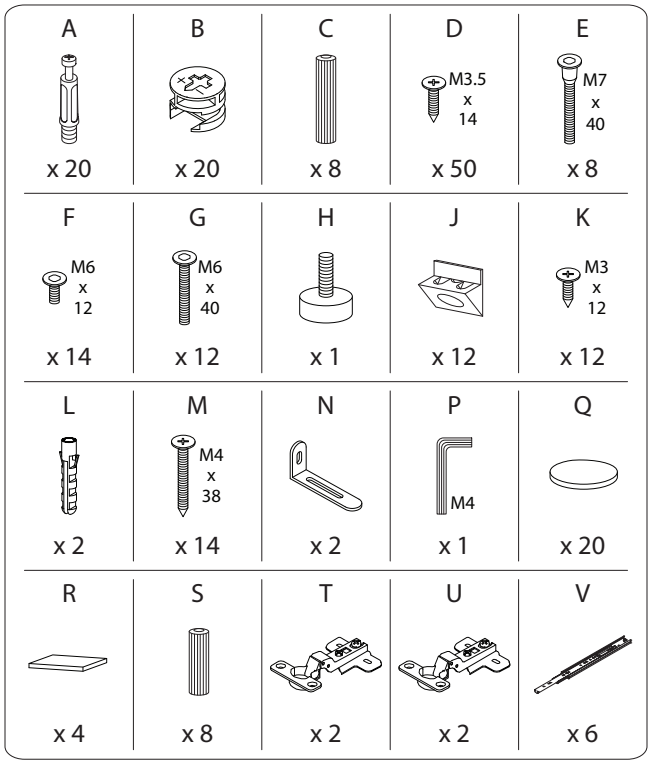
A x 20
B x 20
C x 8
D M3.5 x 14 x 50
E M7 x 40 x 8
F M6 x 12 x 14
G M6 x 40 x 12
H x 1
J x 12
K M3 x 12 x 12
L x 2
M M4 x 38 x 14
N x 2
P M4 x 1
Q x 20
R x 4
S x 8
T x 2
U x 2
V x 6

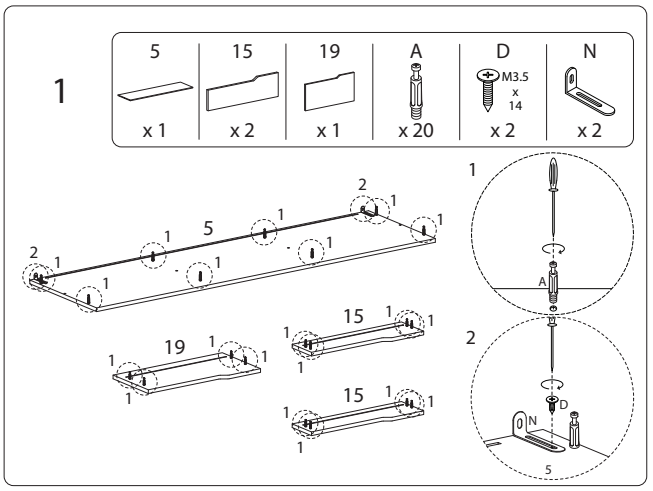
1
5 x 1
15 x 2
19 x 1
A x 20
D M3.5 x 14 x 2
N x 2
1
2
A
D
N
5

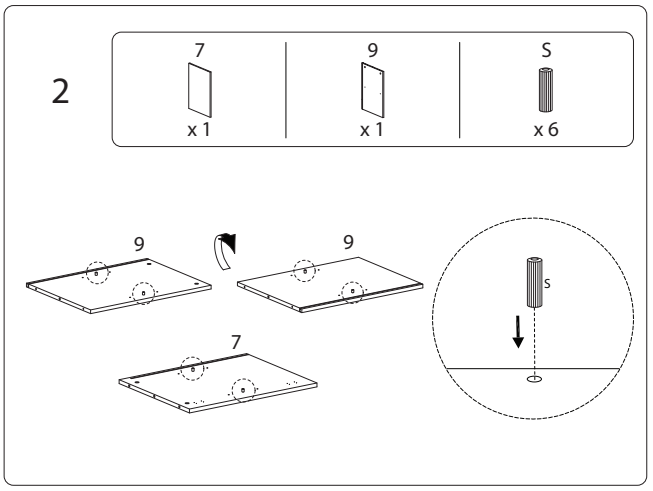
2
7 x 1
9 x 1
S x 6
9
9
7
S

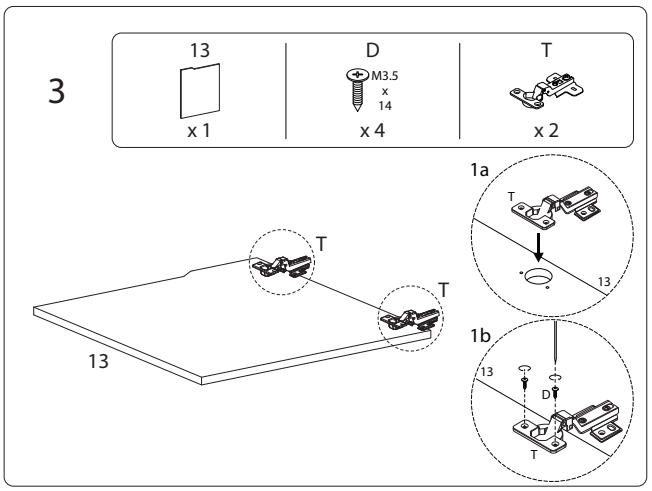
3
13 x 1
D M3.5 x 14 x 4
T x 2
1a
1b
T
13
D

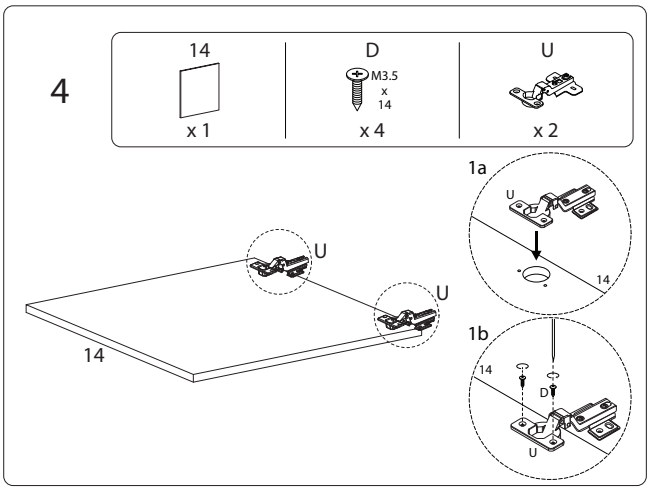
4
14 x 1
D M3.5 x 14 x 4
U x 2
1a
1b
U
14
D

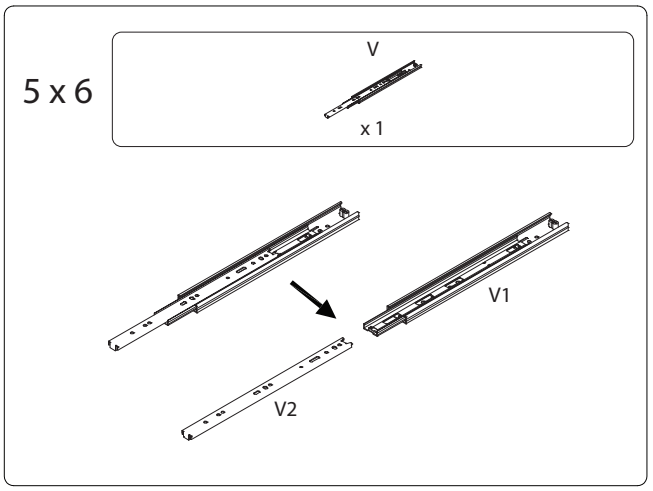
5 x 6
V x 1
V1
V2

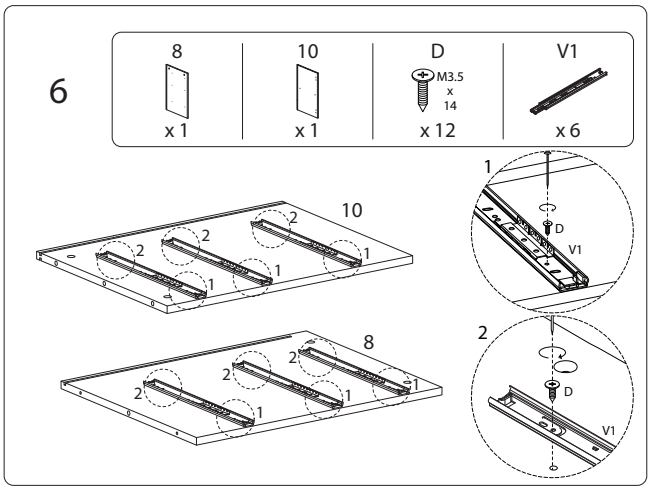
6
8 x 1
10 x 1
D M3.5 x 14 x 12
V1 x 6
1
2
10
8
D
V1

7

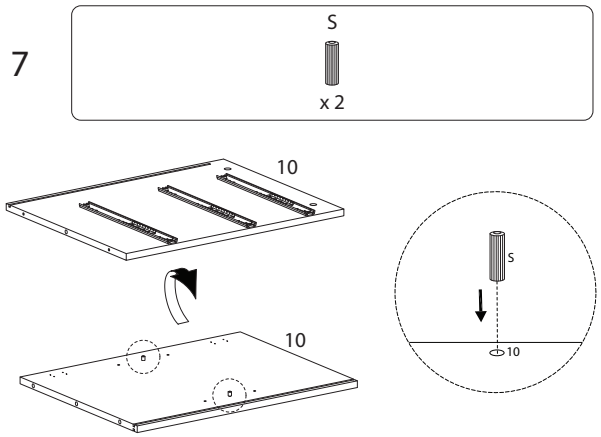

8

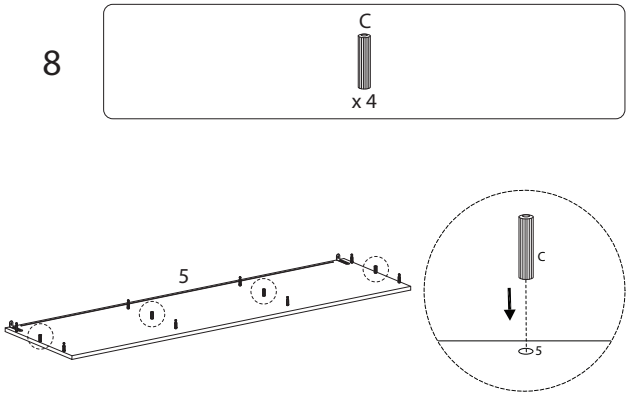

9

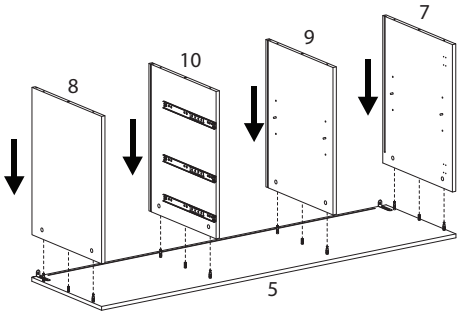

10

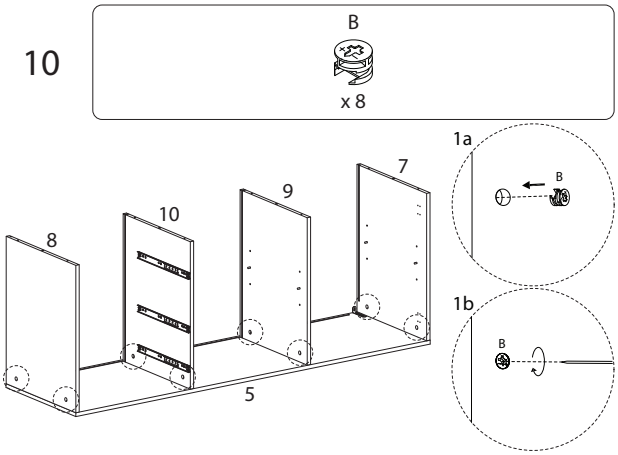

11

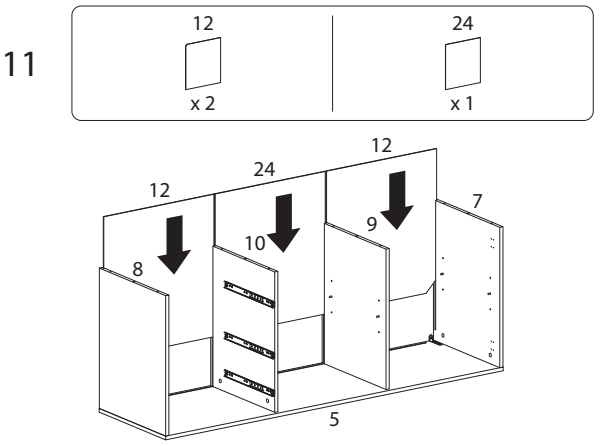

12

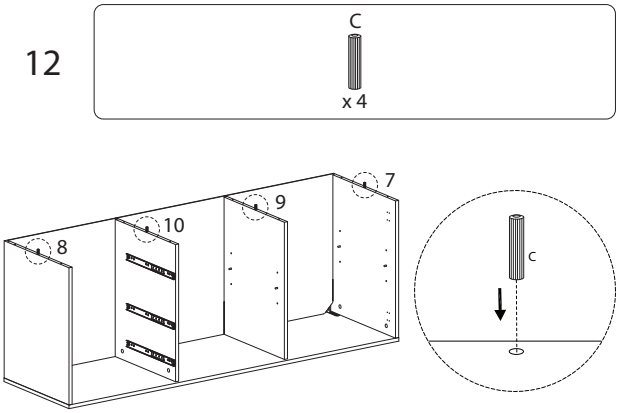

13

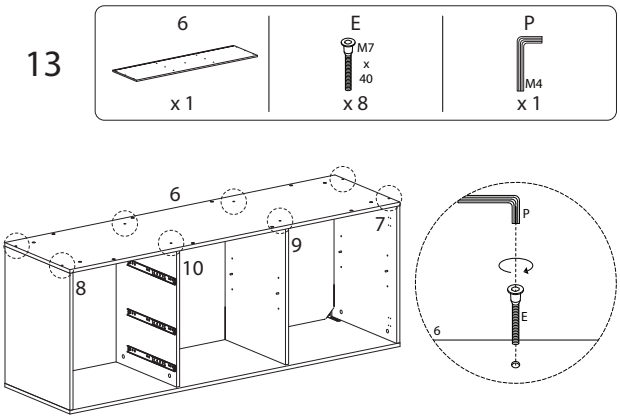

14

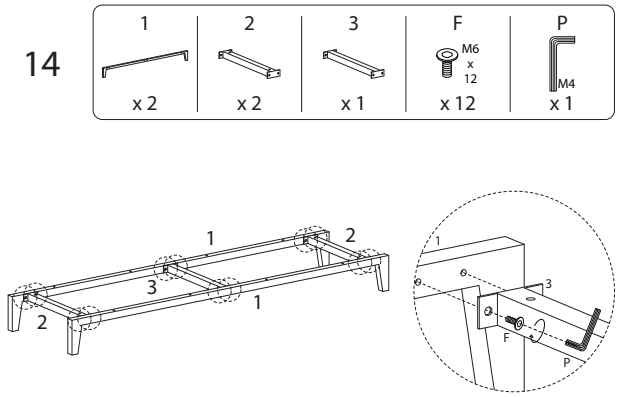

15

G	P
M6 x 40	M4
x 12	x 1

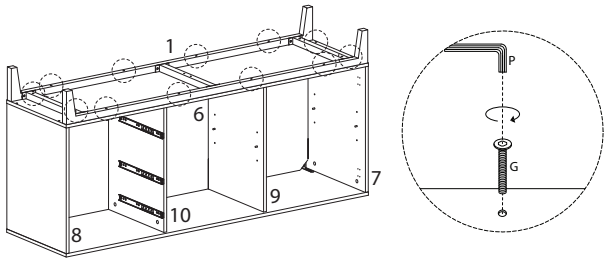

16

4	F	H	P
	M6 x 12		
x 1	x 2	x 1	x 1

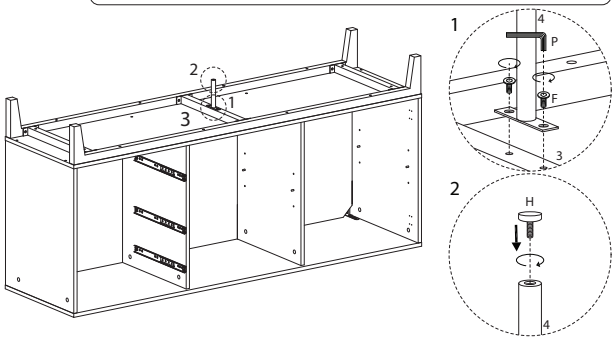

17

R
x 4

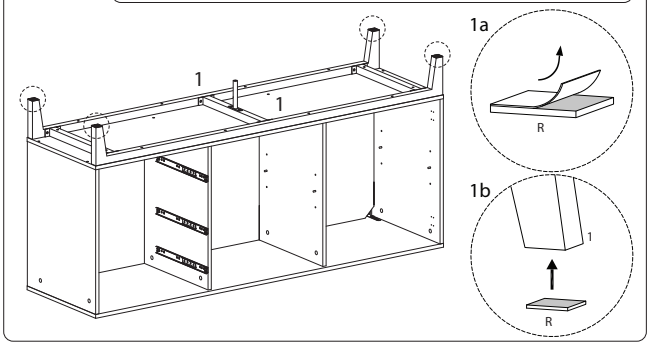

18

Q
x 8

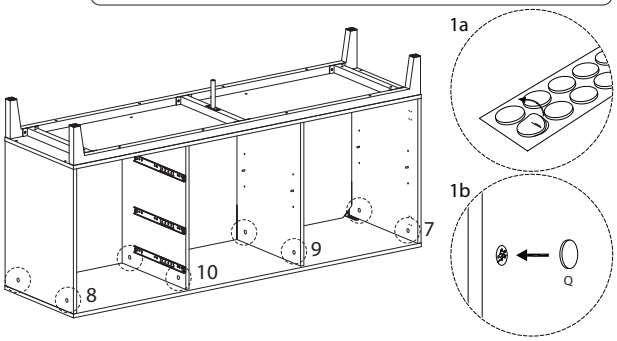

19

J	K
	M3 x 12
x 12	x 12

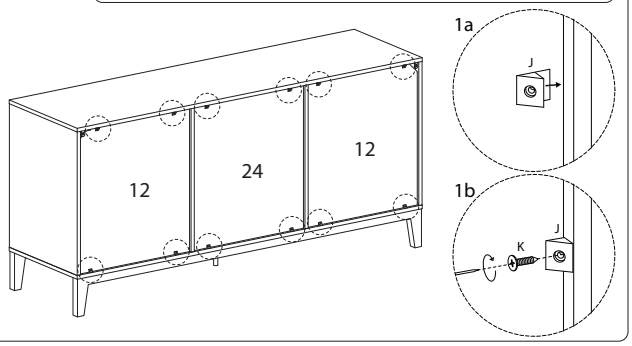

21

L	M
	M4 x 38
x 2	x 2

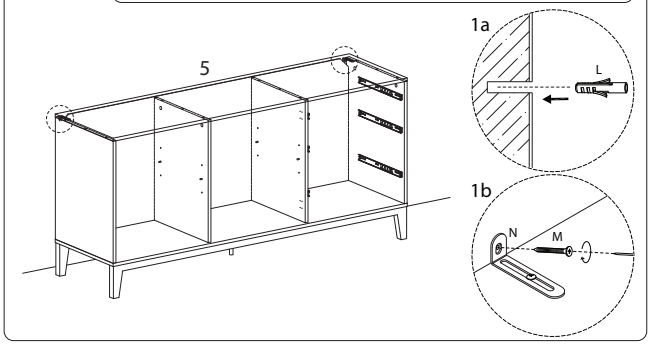

20

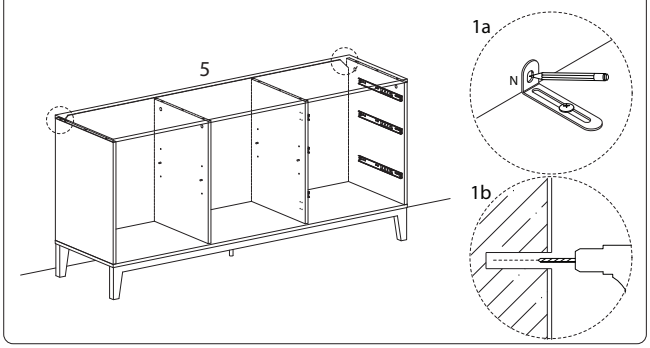

22

11
x 2

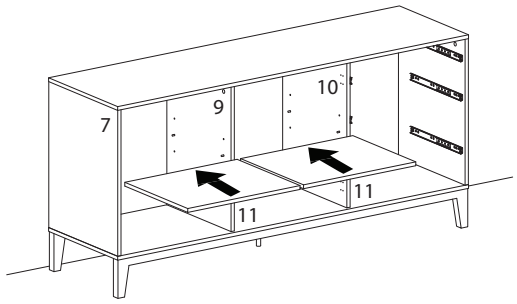

23

D
M3.5 x 14
x 16

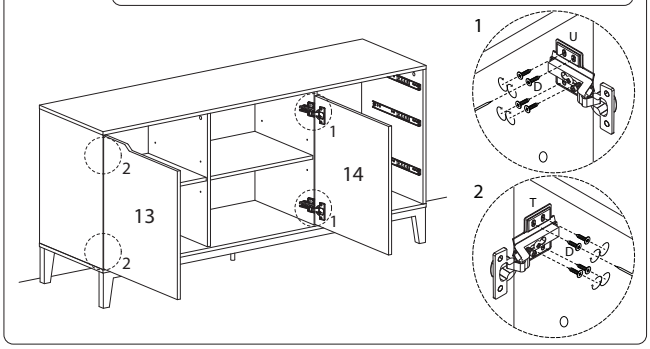

25 x 2

23
x 1

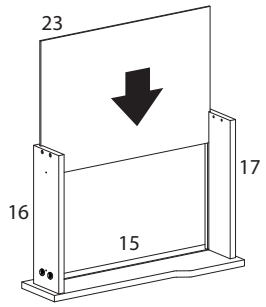

24 x 2

16	17	B
x 1	x 1	x 4

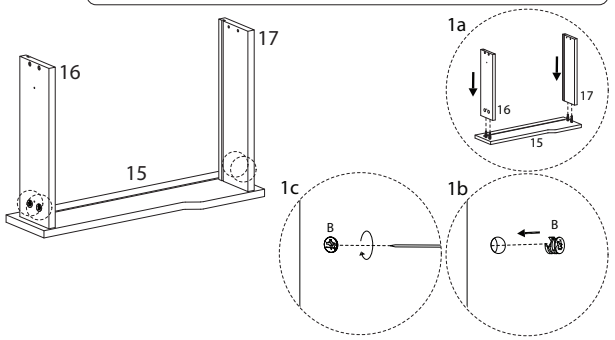

26 x 2

18	M
x 1	M4 x 38 x 4

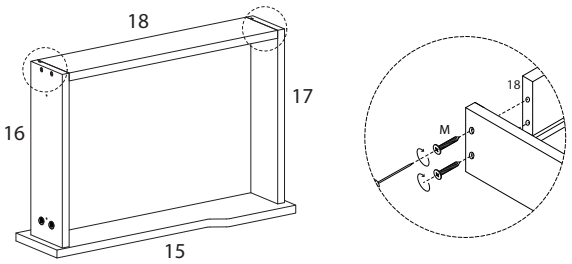

27 x 2

Q
x 4

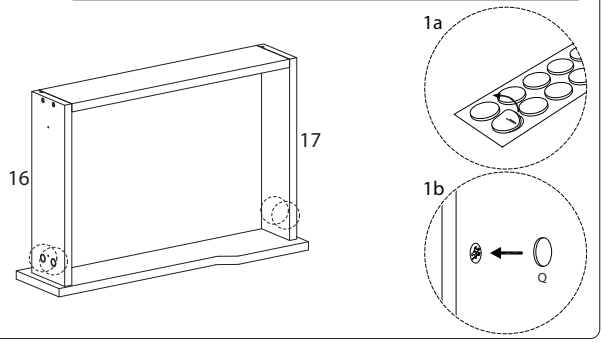

29

20	21	B
x 1	x 1	x 4

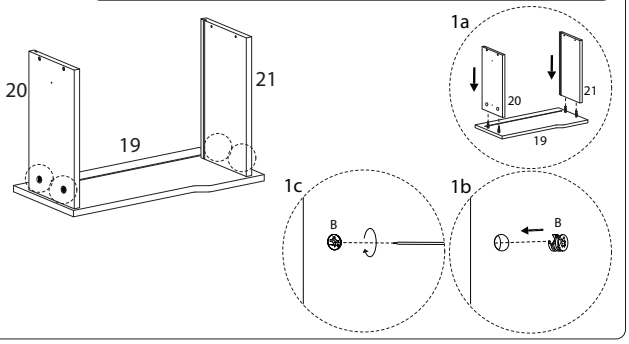

28 x 2

D	V2
M3.5 x 14 x 4	x 2

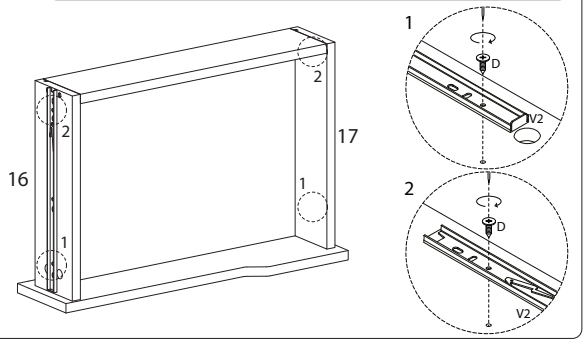

30

23
x 1

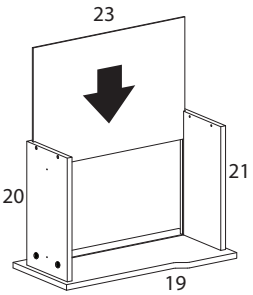

31

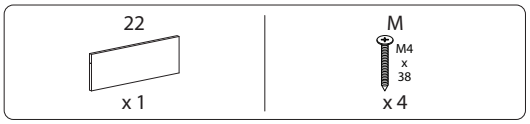
22
x 1
M
M4
x
38
x 4

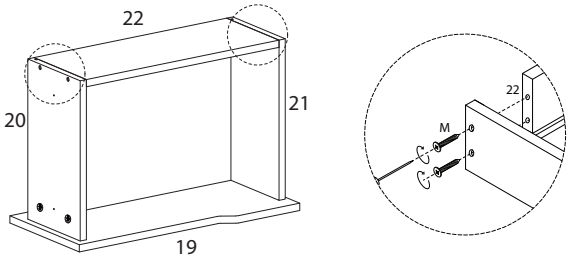
22
20
21
19
22
M

32

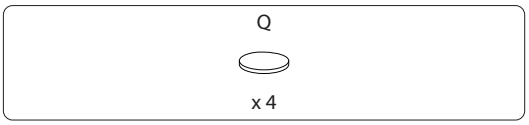
Q
x 4

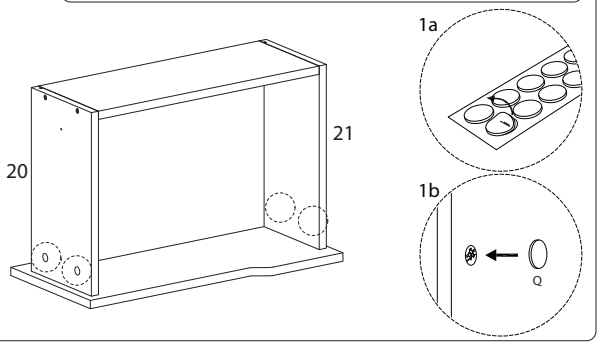
20
21
1a
1b
Q

33

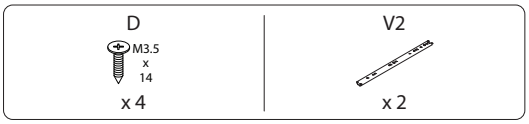
D
M3.5
x
14
x 4
V2
x 2

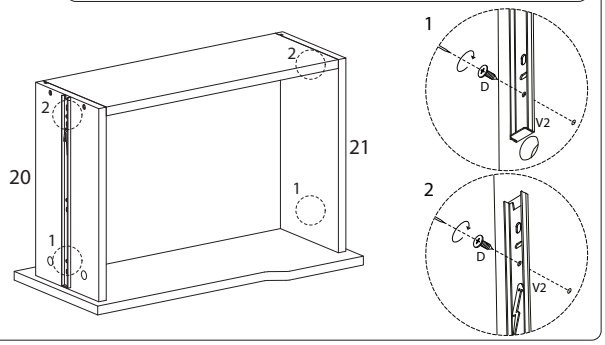
2
2
20
21
1
1
1
D
V2
2
D
V2

34

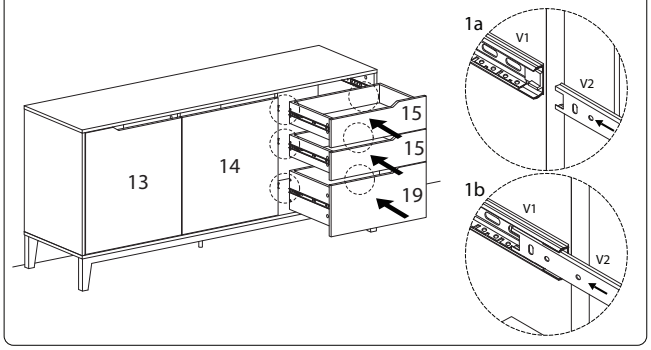
13
14
15
15
19
1a
V1
V2
1b
V1
V2

35

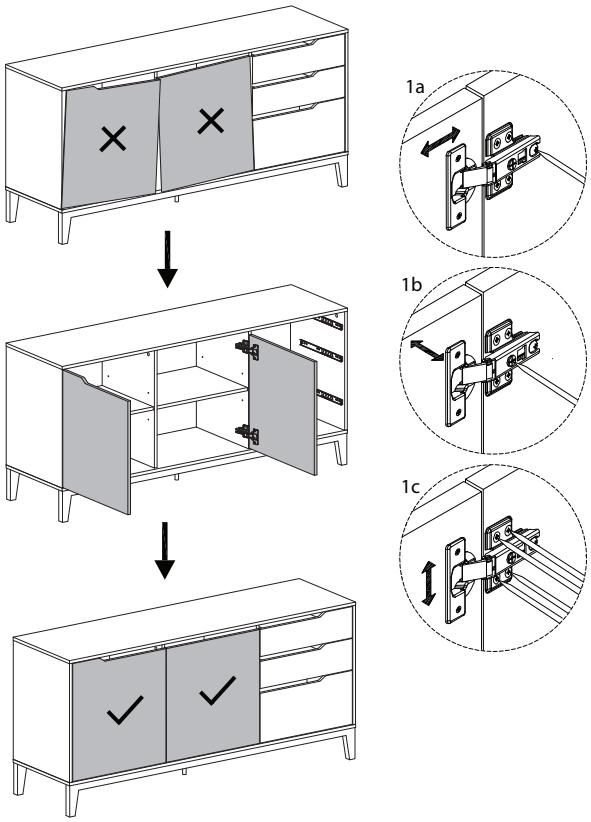
1a
1b
1c