COSTELLO

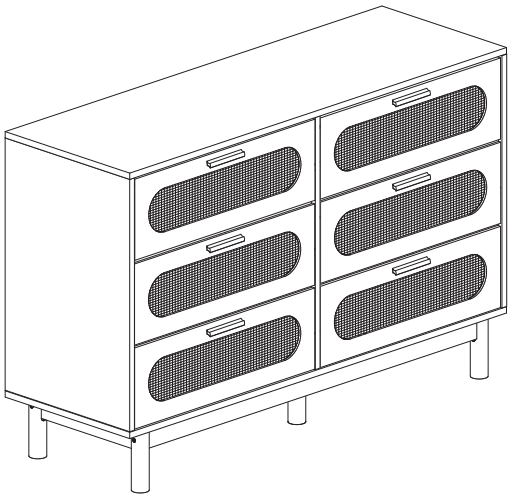

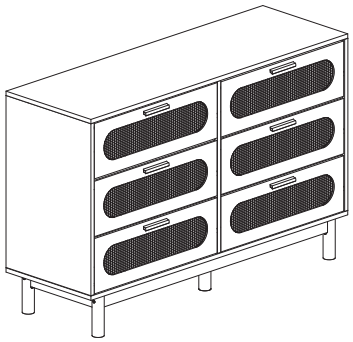

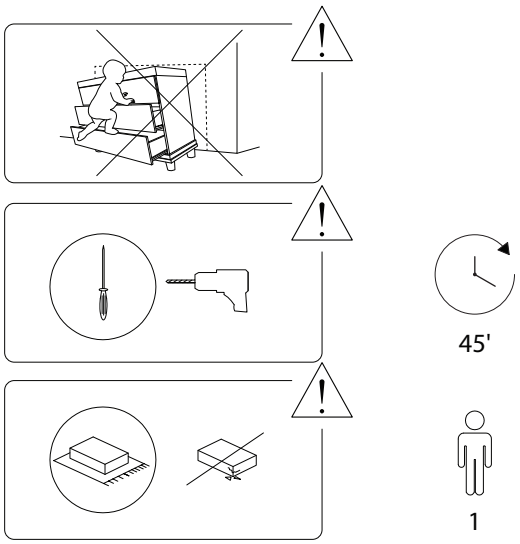
45'
1

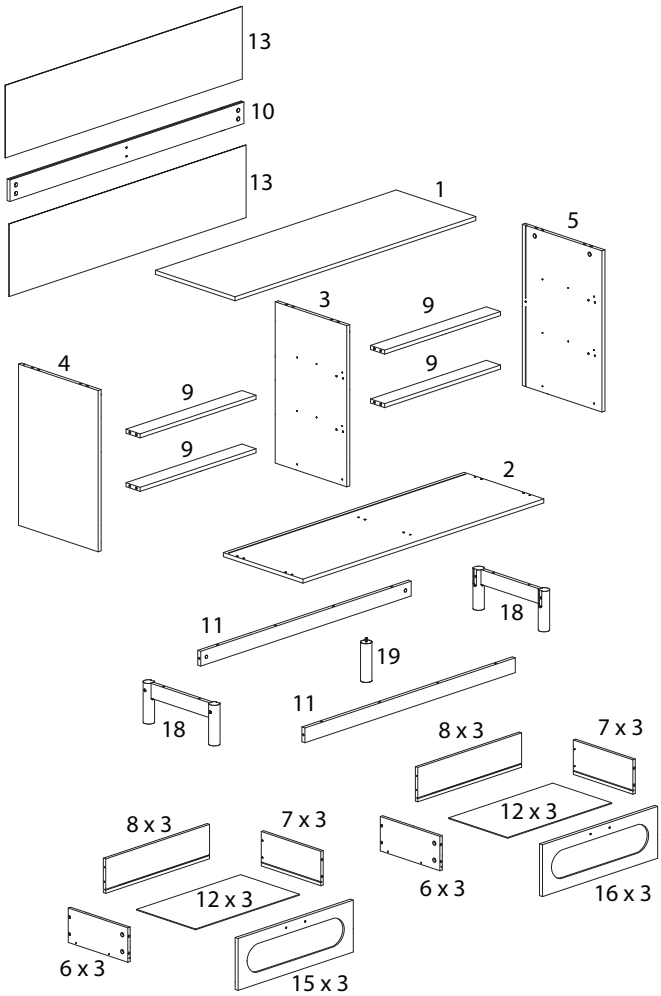
13
10
13
1
5
3
9
9
4
9
9
2
18
11
19
18
11
8 x 3
7 x 3
12 x 3
8 x 3
7 x 3
6 x 3
16 x 3
12 x 3
6 x 3
15 x 3

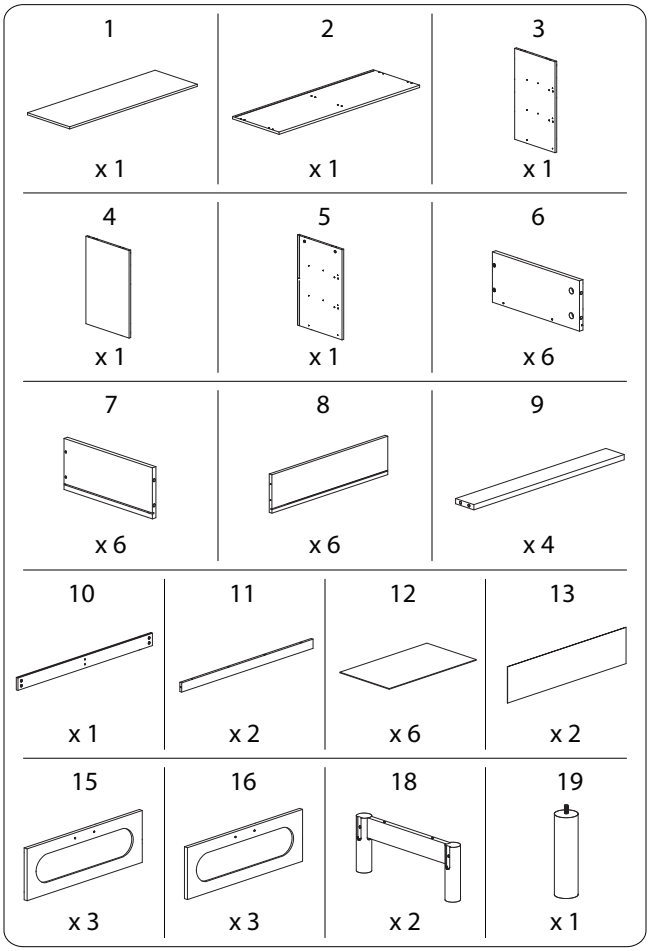
1
x 1
2
x 1
3
x 1
4
x 1
5
x 1
6
x 6
7
x 6
8
x 6
9
x 4
10
x 1
11
x 2
12
x 6
13
x 2
15
x 3
16
x 3
18
x 2
19
x 1

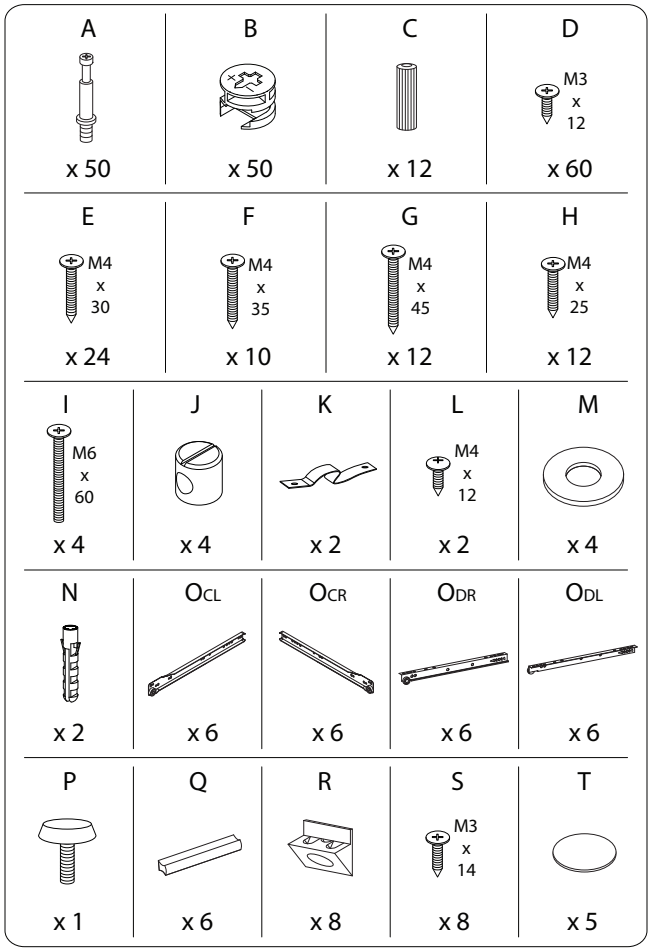
A x 50
B x 50
C x 12
D M3 x 12 x 60
E M4 x 30 x 24
F M4 x 35 x 10
G M4 x 45 x 12
H M4 x 25 x 12
I M6 x 60 x 4
J x 4
K x 2
L M4 x 12 x 2
M x 4
N x 2
OCL x 6
OCR x 6
ODR x 6
ODL x 6
P x 1
Q x 6
R x 8
S M3 x 14 x 8
T x 5

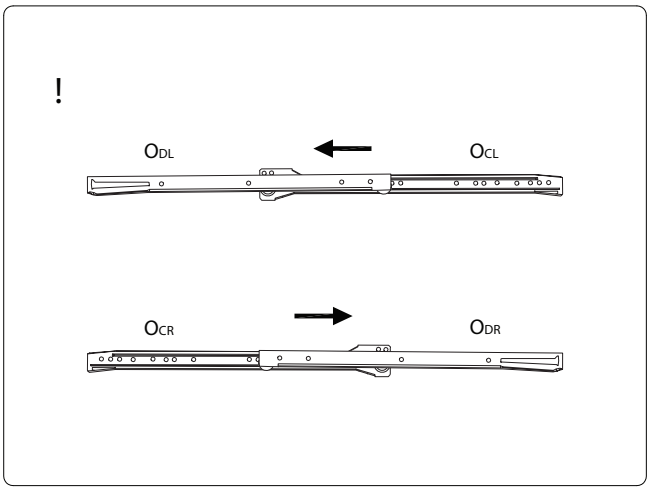
!
ODL
OCL
OCR
ODR

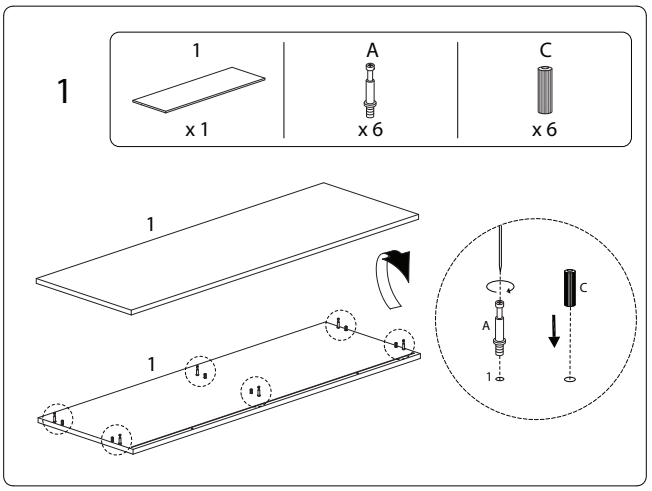
1
1 x 1
A x 6
C x 6
1
1
A
C
1

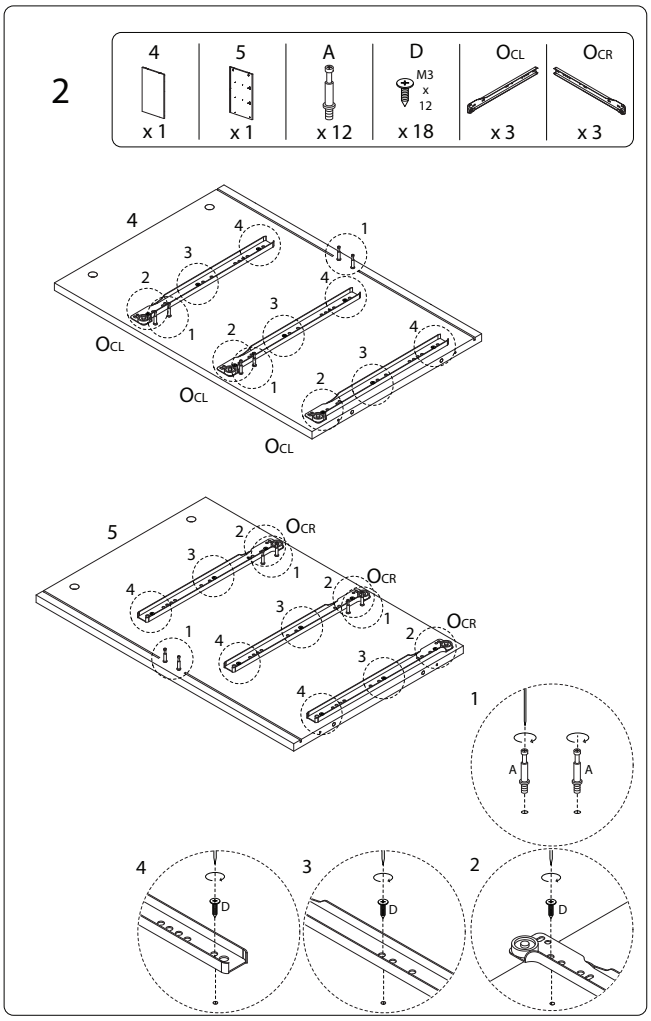
2
4 x 1
5 x 1
A x 12
D M3 x 12 x 18
OCL x 3
OCR x 3
4
OCL
OCL
OCL
5
OCR
OCR
OCR
1
A
A
4
3
2
D
D
D

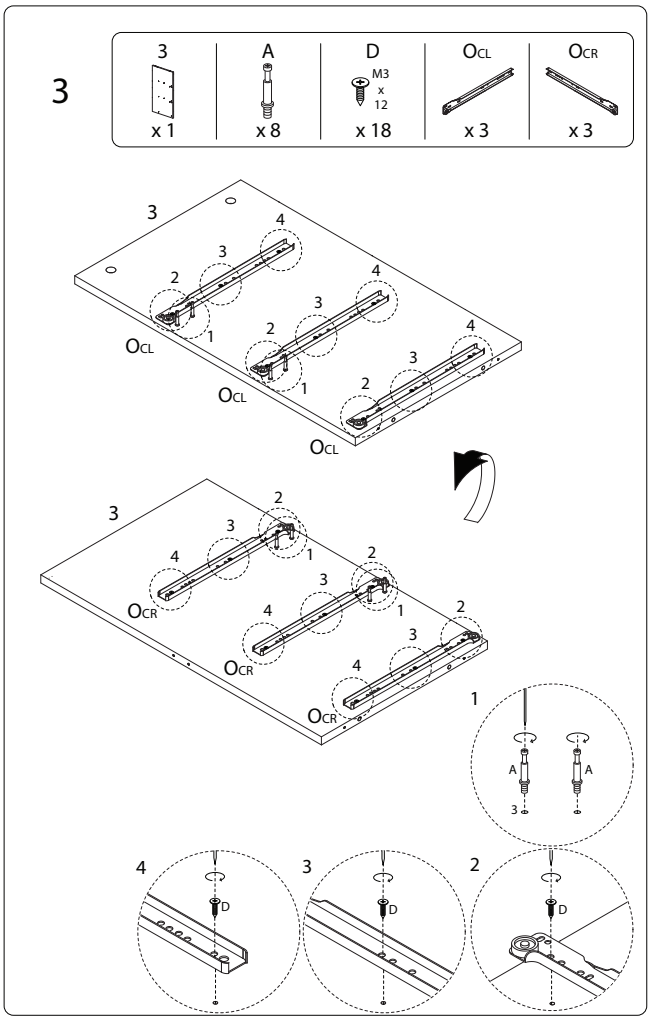
3
3 x 1
A x 8
D M3 x 12 x 18
OCL x 3
OCR x 3
3
OCL
OCL
OCL
3
OCR
OCR
OCR
1
A
A
3
4
3
2
D
D
D

4

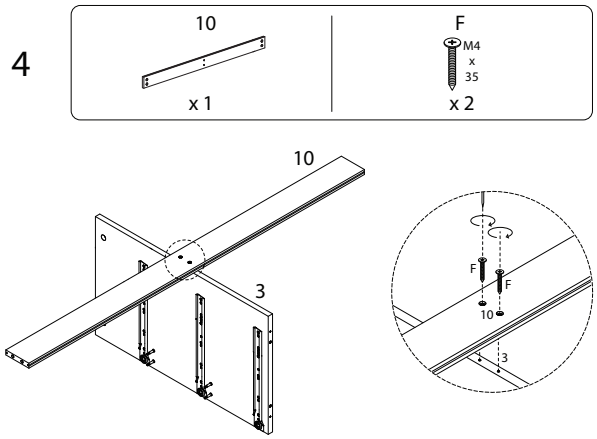
10
x 1
F
M4
x
35
x 2
10
3
F
F
10
3

5

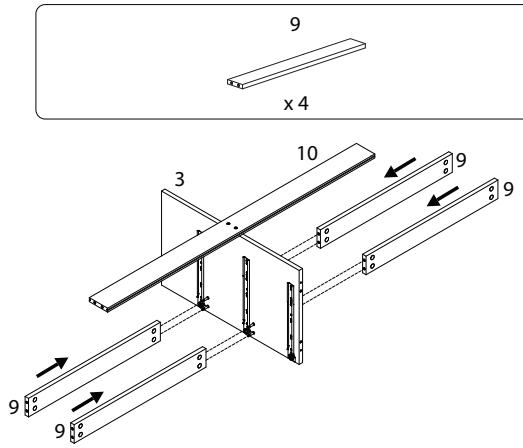
9
x 4
10
3
9
9
9
9

6

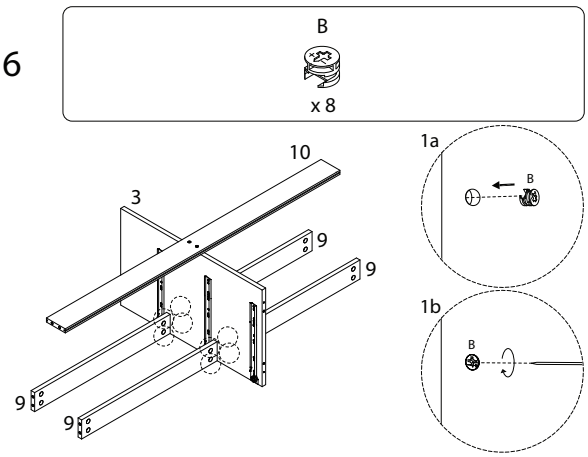
B
x 8
10
3
9
9
9
9
1a
B
1b
B

7

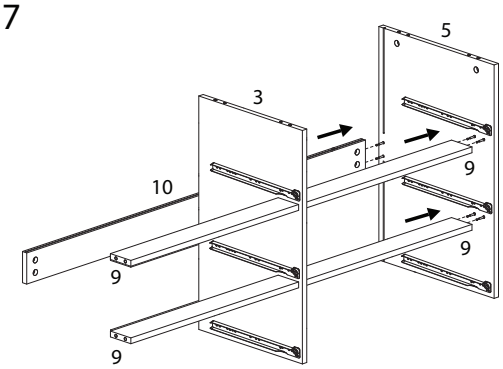
5
3
10
9
9
9
9

8

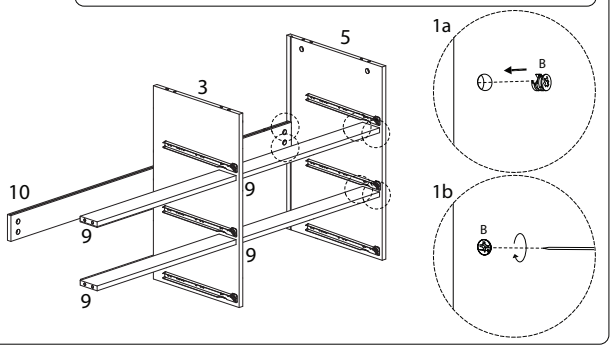
B
x 6
5
3
10
9
9
9
9
1a
B
1b
B

9

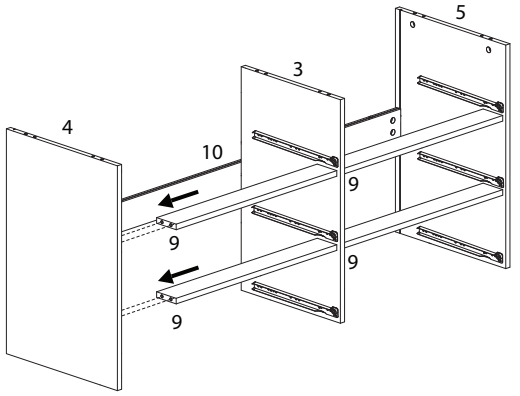
5
3
4
10
9
9
9
9

10

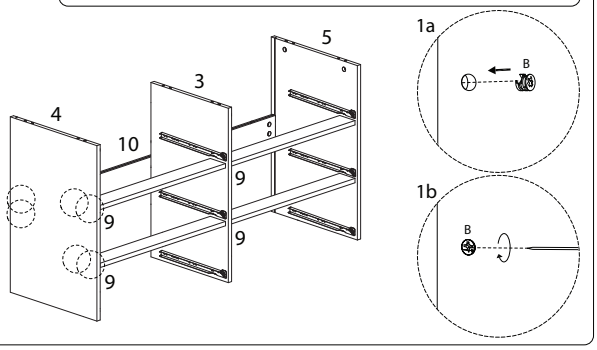
B
x 6
5
3
4
10
9
9
9
9
1a
B
1b
B

11

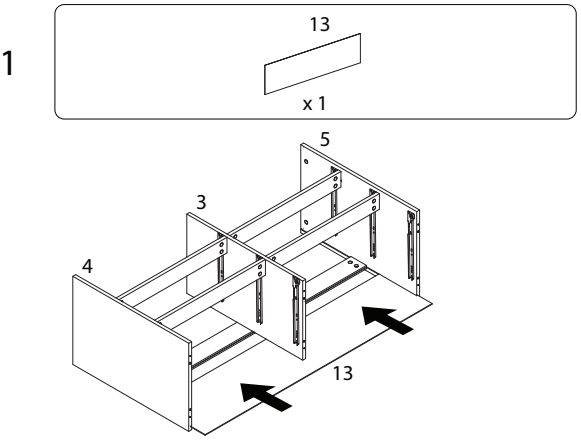
13
x 1
5
3
4
13

12

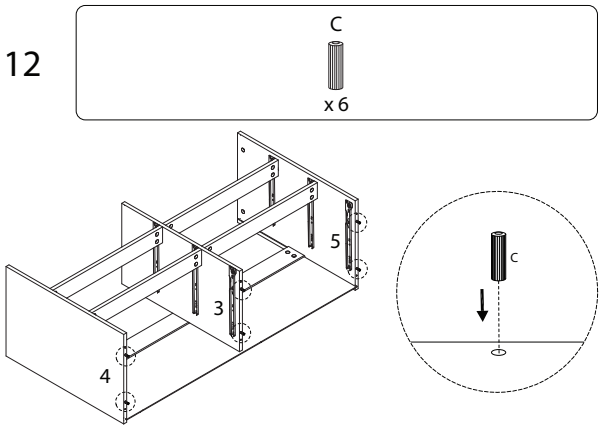

13

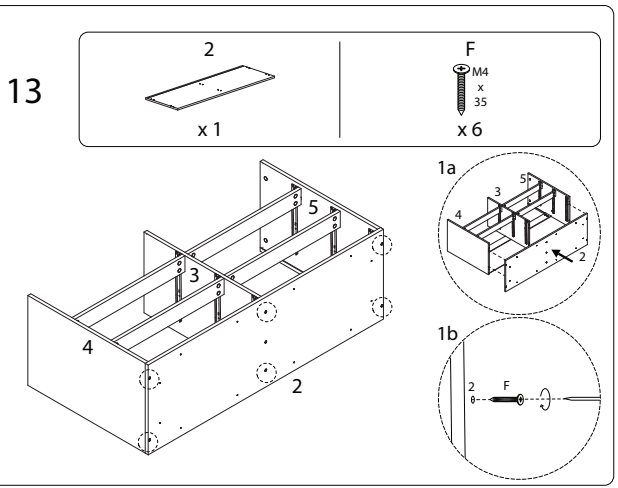

14

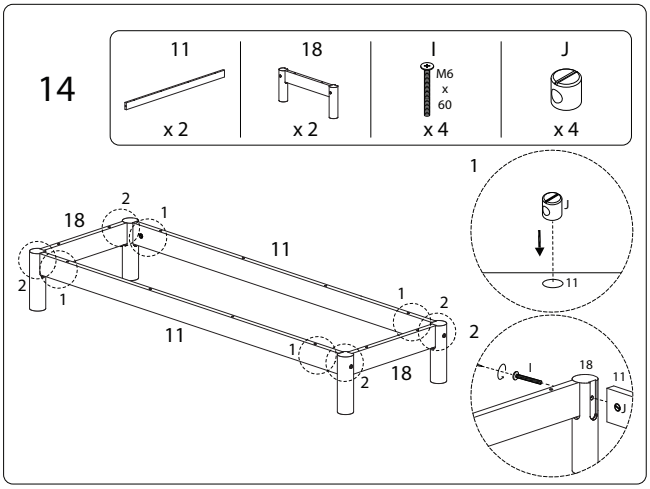

15

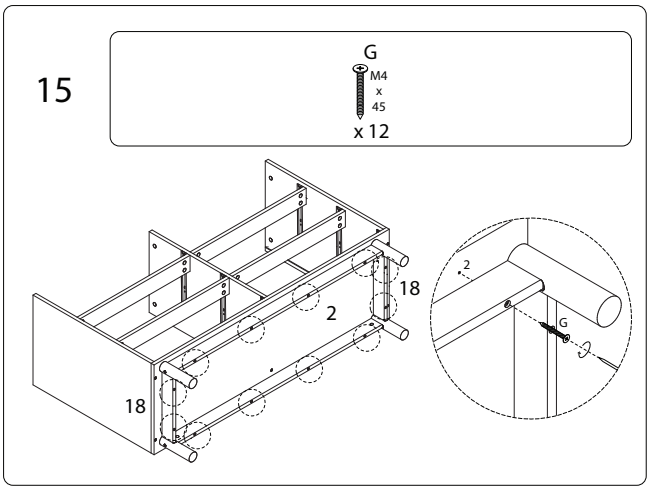

16

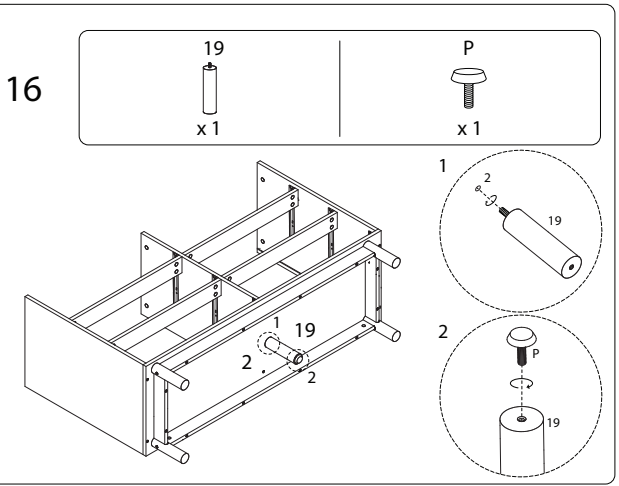

17

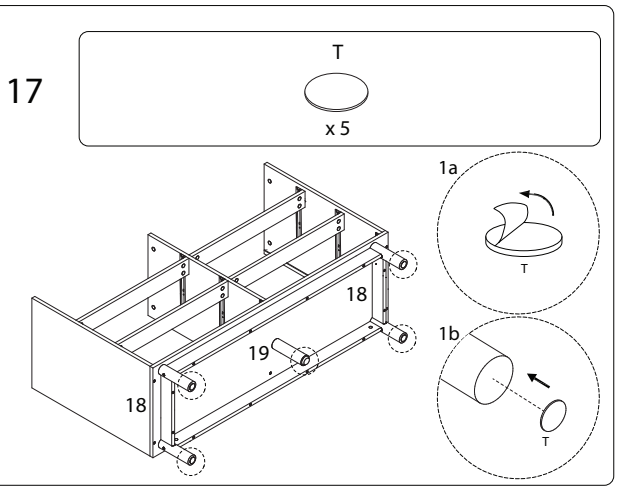

18

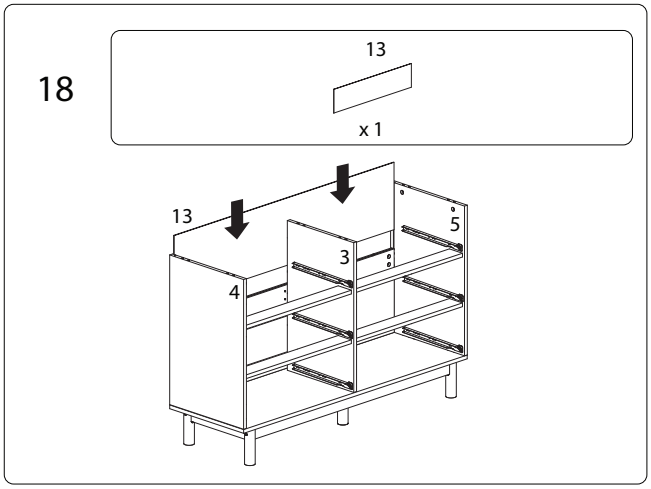

19

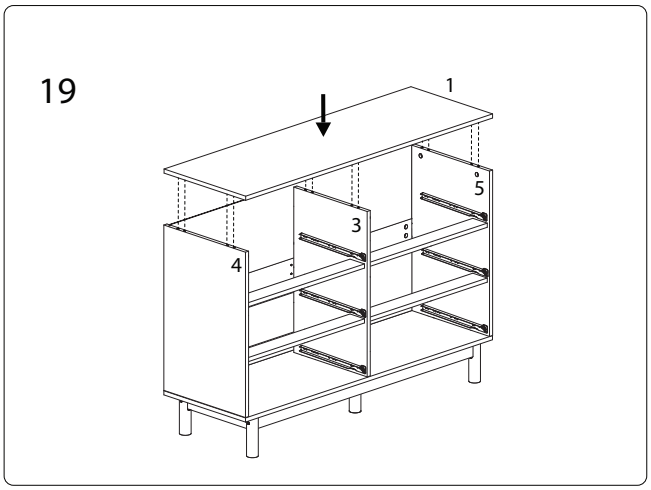

20

B
x 6

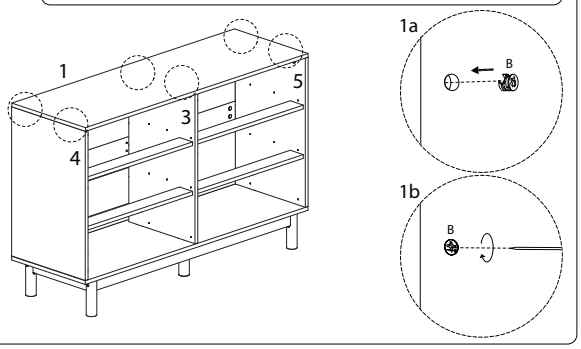

21 x 6

6	7	8	E
x 1	x 1	x 1	M4 x 30 x 4

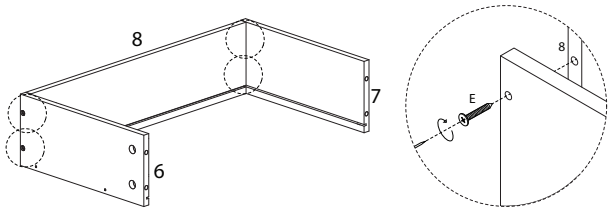

22 x 6

12
x 6

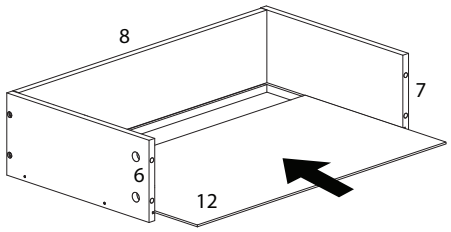

23 x 3

15	A	H	Q
x 1	x 4	M4 x 25 x 2	x 1

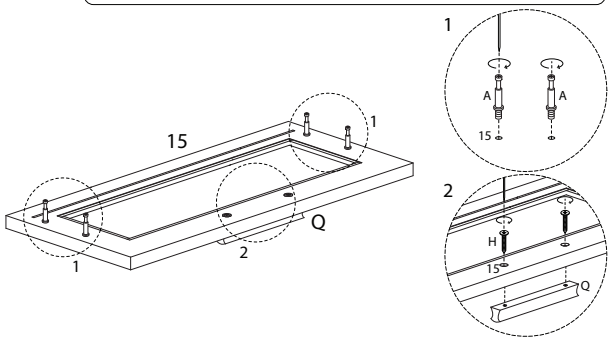

24 x 3

16	A	H	Q
x 1	x 4	M4 x 25 x 2	x 1

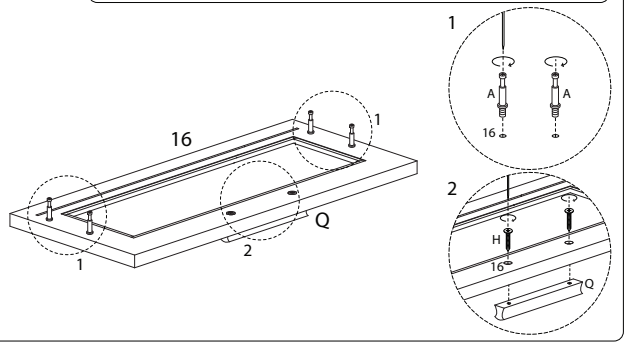

25 x 3

B
x 4

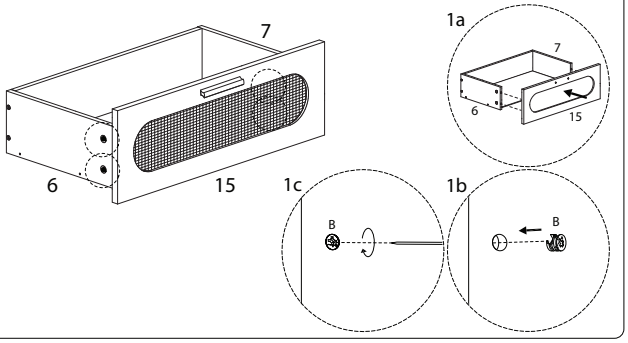

26 x 3

B
x 4

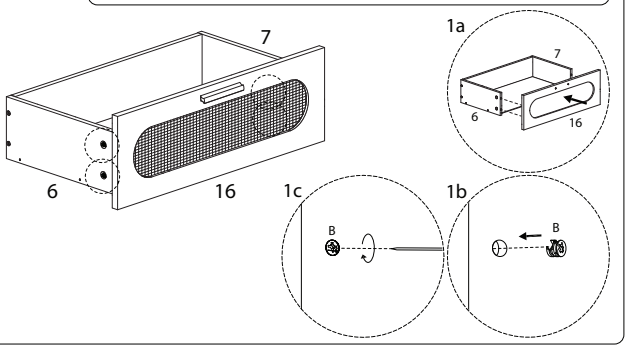

27 x 6

D	ODR	ODL
M3 x 12 x 4	x 1	x 1

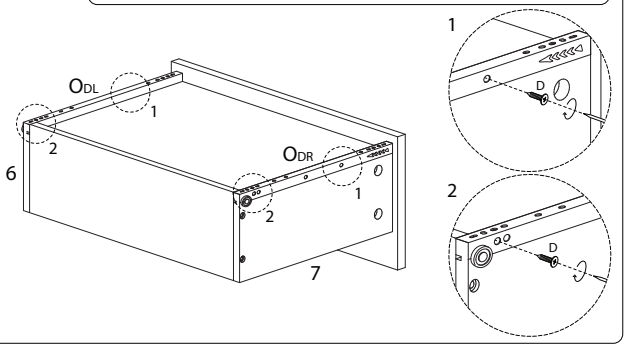

28

R	S
x 8	M3 x 14 x 8

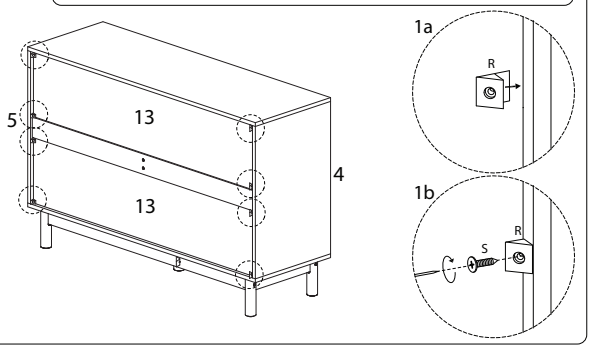

29

K	L	M
x 2	M4 x 12 x 2	x 2

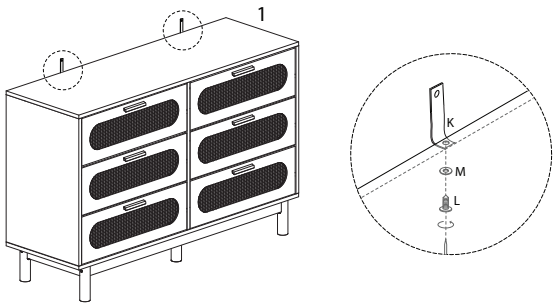

30

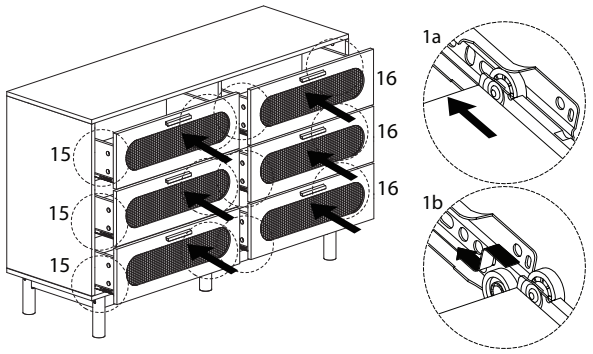

31
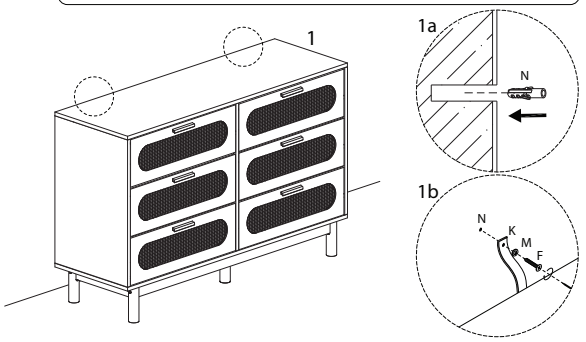
F	M	N
M4 x 35 x 2	x 2	x 2