THOMPSON

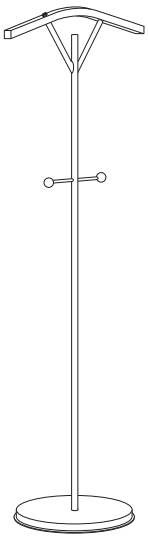

1/5

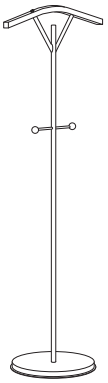

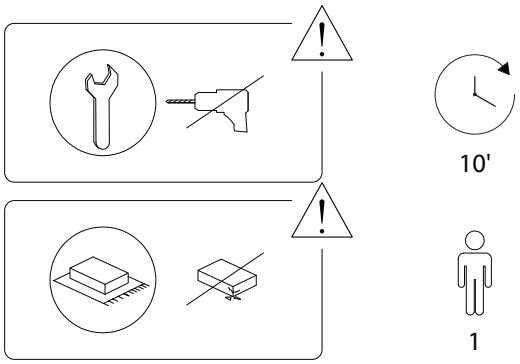

2/5

1576/THOMPSON/050526/

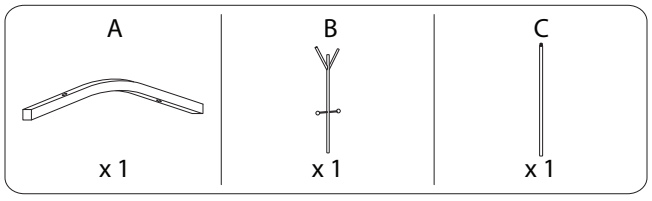

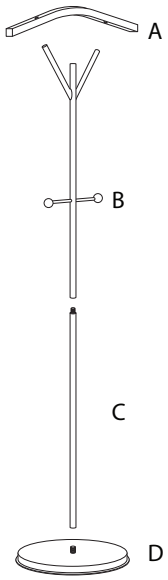

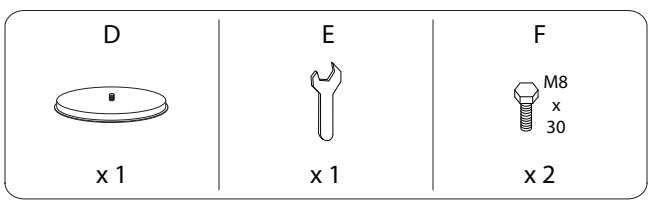

3/5

1576/THOMPSON/050526/

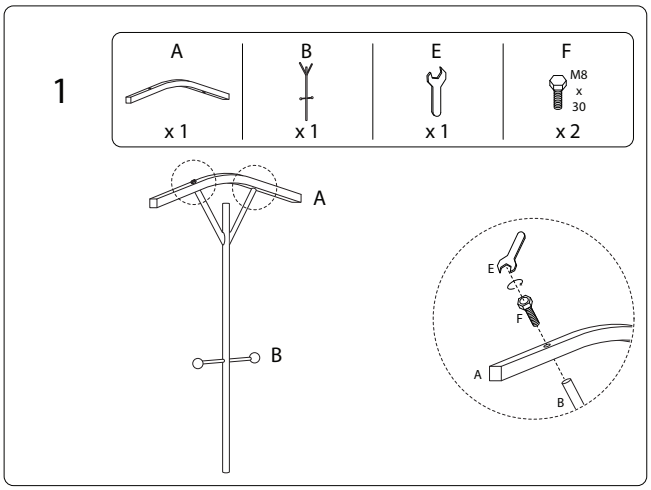

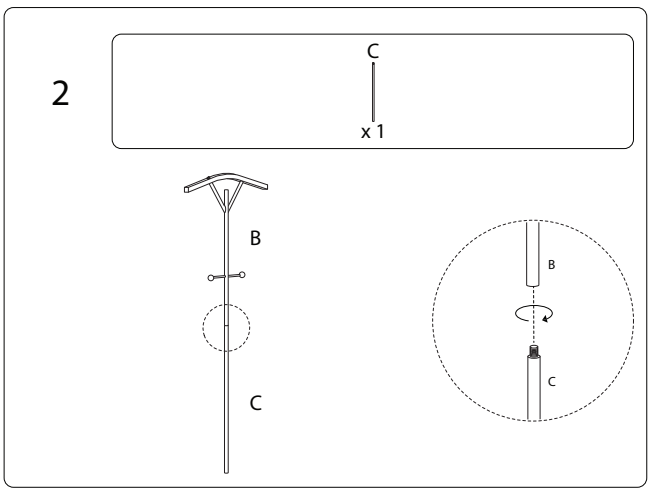

4/5

1576/THOMPSON/050526/

3

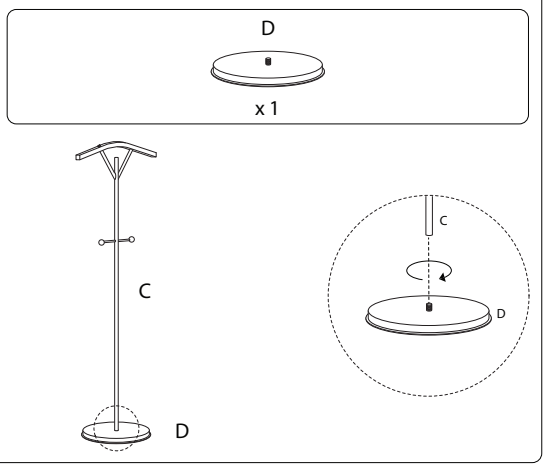

1576/THOMPSON/050526/