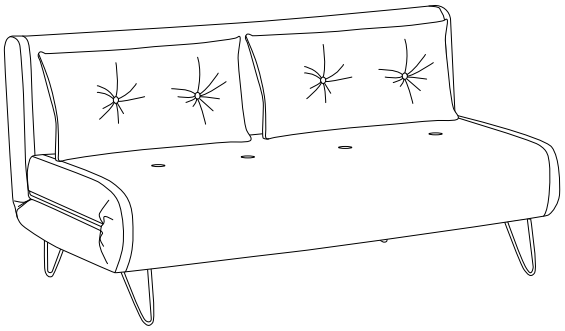

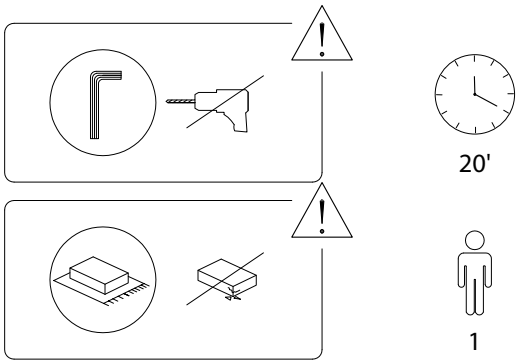
20'
1

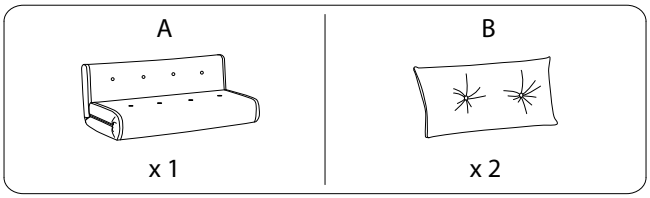
A
x 1
B
x 2

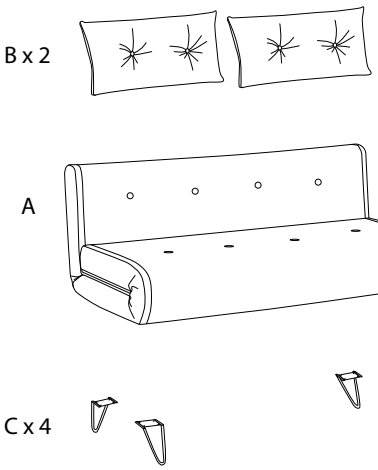
B x 2
A
C x 4

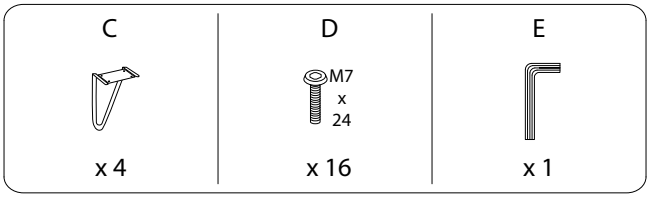
C
x 4
D
M7
x
24
x 16
E
x 1

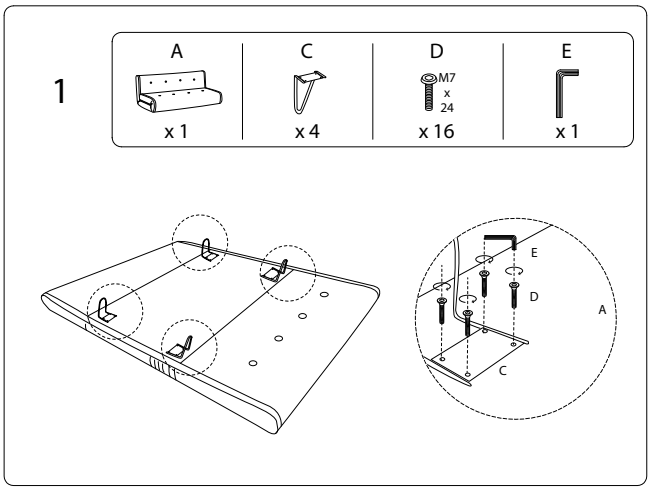
1
A
x 1
C
x 4
D
M7
x
24
x 16
E
x 1
E
D
A
C

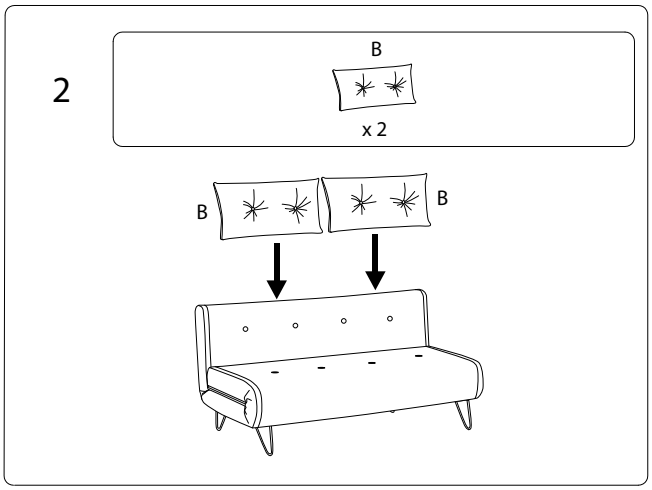
2
B
x 2
B
B

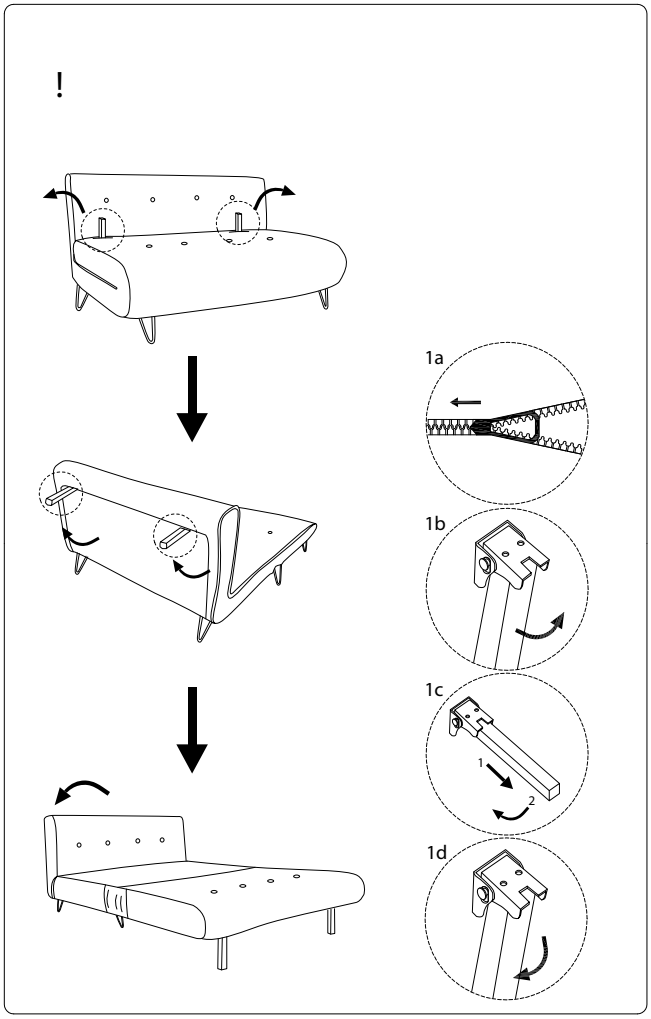
!
1a
1b
1c
1
2
1d

!

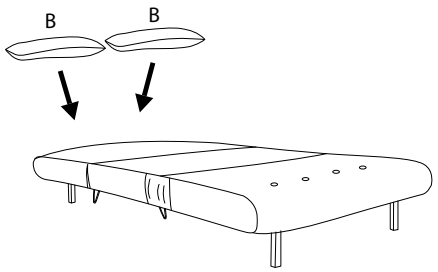

17721/VESTFOLD.2/061221/